Product Data

AQUAFORCE® 30XA080-500 Air-Cooled Liquid Chillers

80 to 500 Nominal Tons
(265 to 1615 Nominal kW)

AQUAFORCE®

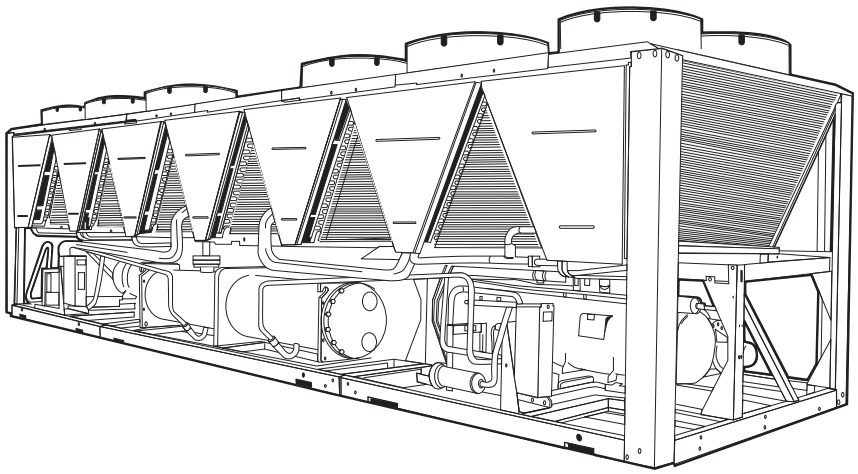

2006 DEALER DESIGN AWARDS
the NEWS | SILVER

ASHRAE 90.1 COMPLIANT

Well exceeds ASHRAE 90.1 Standards.

AquaForce chillers were designed from the ground up to meet the efficiency demands of today and the future by providing premium air-cooled chiller packages for contractors, consulting engineers and building owners.

- Rotary screw compression
- R-134a HFC refrigerant
- Quiet AeroAcoustic™ fan system
- Novation® heat exchanger technology with microchannel coil
- Easy to use *Comfort*Link™ controls
- Optional integrated hydronic pump package, available with variable frequency drive (VFD)

Features/Benefits

AquaForce 30XA chillers provide best full load and part load performance in a single chassis from 80 to 500 tons

Premium performance

Aqua series chillers are Carrier's most efficient air-cooled models. The AquaForce chiller is one of the most affordable air-cooled chillers to operate and maintain. The AquaForce chiller offers full load EER (Energy Efficiency Ratio) up to 10.9 and IPLV (Integrated Part Load Value) up to 15.4 with Novation heat exchanger technology. High-efficiency rotary screw compressors with infinitely variable slide valves allow the chillers to exactly match actual load conditions, delivering exceptional part load performance. The AquaForce chillers deliver superior efficiency through the entire operating range to keep costs and demand charges down. This exceptional performance has a significant impact on energy savings and cost of ownership.

Copyright 2011 Carrier Corporation

Features/Benefits (cont)

AquaForce® chillers' quiet operation make them ideal for sound sensitive applications

Great performance is delivered in a low sound unit that will be quiet enough for any application including hospitals, schools and other sites located in residential neighborhoods. The AquaForce chiller's AeroAcoustic™ fan is almost twice as quiet per cfm as the competition. In part load operation, such as cooler weather or night time duty, fewer fans operate. This results in even quieter operation.

Built in reliability

AquaForce chillers were developed under one of the most exacting qualification programs ever used for commercial chiller products. The compressors are virtually maintenance-free and protected by an auto-adaptive control that minimizes compressor wear. Operate AquaForce chillers year-round from –20 F (–29 C) to 125 F (52 C), with a combination of options and control methods. The following features are also provided to help ensure reliable performance:

Multiple independent circuits provide redundancy and greater reliability.

Electronic expansion valve (EXV) allows for precise control through all operating ranges.

Highly efficient, reliable chilled water circuit

AquaForce chillers provide a comprehensive chilled water circuit utilizing a high-efficiency shell-in-tube flooded cooler or an optional shell-in-tube DX cooler. Units are equipped with a drainable cooler.

Electronic thermal-dispersion flow switch is included with the cooler. The switch is factory installed and tested and contains no moving parts for high reliability.

Optional integrated hydronics package is more than just a pump, it is an entire chilled water system, including:

- Single/dual pumps up to 15 hp and 140 ft head
- Available in constant speed of VFD configuration
- Regular strainer
- Cleanout strainer
- Flow regulator
- Freeze protection to –20 F (with freeze protection option)
- Heaters
- Required piping
- Pressure/temperature taps
- Isolation check valves for dual pump systems

The factory-installed and tested hydronics package provides faster, simpler and less expensive installation.

Environmentally sound

Refrigerant R-134a enables the user to make a responsible choice in helping to preserve the environment. Refrigerant R-134a is an HFC refrigerant that does not contain ozone-layer damaging chlorine. This refrigerant is unaffected by the Montreal Protocol. It is a safe, non-toxic*, efficient and environmentally sound refrigerant.

Easy installation

A single chassis design provides a one-piece unit from 80 to 500 tons. The base rail is industrial-quality cold-rolled steel for maximum structural integrity. The base rail is $^1/_4$-in. with RTFP (round tube, plate fin) coils or 7 ga with MCHX (microchannel) coils. The zinc-dipped galvanized frame (with SermaGuard™ coated screws) provides the best protection on the market for corrosion resistance. With such a structurally sound base, no perimeter base rail is needed.

*Comfort*Link™ controls for ease of use

The *Comfort*Link controls communicate in easy to understand English, making it as easy as possible to monitor and control each AquaForce chiller while accurately maintaining fluid temperatures. *Comfort*Link controls are available with French, Portuguese and Spanish as a standard configuration option. Carrier 30 Series chillers' *Comfort*Link controls provide features such as chilled water temperature reset, demand limiting, compressor wear minimization and protection, temperature and pressure displays and diagnostic functions. These controls result in higher chiller reliability, simplified training and more productive service calls with correspondingly lower operational and maintenance costs.

Two user interface options are available, the Touch Pilot™ display and the Navigator™ module. The Touch Pilot display is an easy to use touch screen display that provides simple navigation for configuration and control of AquaForce units.

Carrier's exclusive handheld Navigator display provides convenience and powerful information in the palm of your hand. The Navigator display helps technicians to quickly diagnose problems and even prevent them from occurring. All AquaForce units are ready to be used with Carrier Comfort Network® (CCN) devices.

A BACnet† communication option is also available for the i-Vu® Open control system or a BACnet building automation system.

Table of contents

	Page
Features/Benefits	1-3
Model Number Nomenclature	4
AHRI Capacity Ratings	5
Physical Data	6-24
Options and Accessories	25-28
Dimensions	29-93
Selection Procedure	94,95
Performance Data	96-103
Typical Piping and Wiring	104-109
Electrical Data	110-122
Controls	122-124
Control and Power Wiring Schematic	125
Application Data	126-133
Guide Specifications	134-140

*Under ASHRAE Standard 34-1992, R-134a is classified as an A1refrigerant.
†Sponsored by ASHRAE (American Society of Heating, Refrigerating, and Air Conditioning Engineers).

Novation® heat exchanger technology

The Novation heat exchanger design with microchannel (MCHX) condenser coil is a robust, cost effective alternative to traditional coil design. These coils are offered coated or uncoated to match coil protection to site conditions. The Carrier Electronic Catalog (E-Cat) can be used to determine whether or not corrosion protection is recommended for particular applications in coastal/marine environments. Following the input of the requested data, the E-Cat program output will advise the appropriate coil to be used. Other factors described in "Selection Guide: Environmental Corrosion Protection, Novation Heat Exchanger with Microchannel Coil Technology" catalog number 04-581042-01 must also be considered to determine if corrosion protection is required.

Microchannel coils are sturdier than other coil types, making them easier to clean without causing damage to the coil.

Due to the compact all aluminum design, microchannel coils will reduce overall unit operating weight by 6 to 7%. The streamlined MCHX coil design reduces refrigerant charge by up to 30%.

The coil is designed with rubber isolation around the powder painted coil frame to eliminate galvanic couples which can cause corrosion due to dissimilar metals.

TOUCH PILOT™ DISPLAY

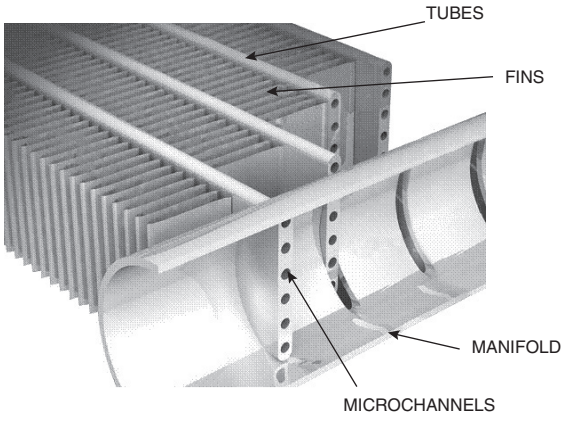

NOVATION® HEAT EXCHANGER TECHNOLOGY WITH MICROCHANNEL CONDENSER COILS

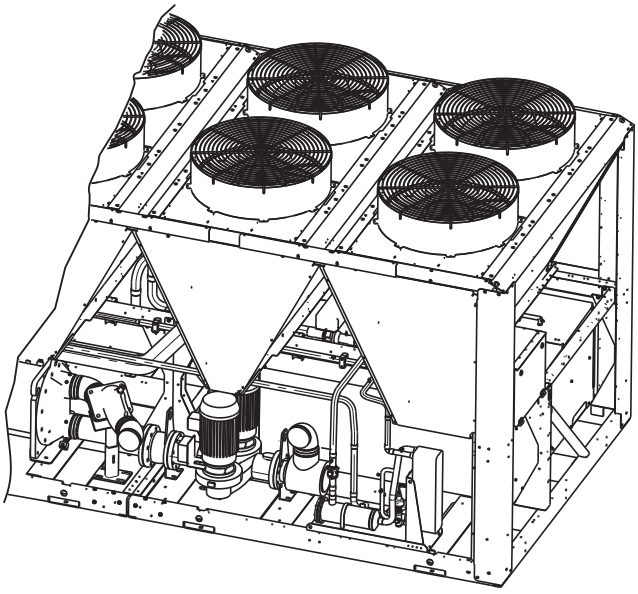

OPTIONAL PUMP PACKAGE (FLOODED COOLER SHOWN)

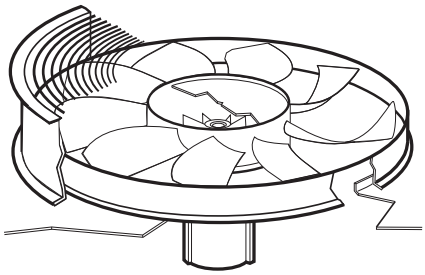

LOW-NOISE AEROACOUSTIC FAN

Model number nomenclature

30XA A 200 6 F - 0 - - - L

30XA – AquaForce® Air-Cooled Chiller

Design Series

Unit Sizes*

080	102	140	182	260	375
082	110	142	200	280	400
090	112	160	202	300	450
092	120	162	220	325	500
100	122	180	240	350	

Voltage

1 – 575-3-60
2 – 380-3-60
4 – 230-3-60
6 – 460-3-60
7 – 200-3-60

Condenser Coil/Ambient/Low Sound Options

- – Aluminum Fin/Copper Tube, High Ambient Temperature
0 – Copper Fin/Copper Tube, High Ambient Temperature
1 – Aluminum Pre-Coat Fin/Copper Tube, High Ambient Temperature
2 – Aluminum E-Coat Fin/Copper Tube, High Ambient Temperature
3 – Copper E-Coat Fin/Copper Tube, High Ambient Temperature
4 – Novation® Heat Exchanger (MCHX), High Ambient Temperature
5 – MCHX E-Coat, High Ambient Temperature
6 – Aluminum Fin/Copper Tube, High Ambient Temperature, Low Sound
7 – Copper Fin/Copper Tube, High Ambient Temperature, Low Sound
8 – Aluminum Pre-Coat Fin/Copper Tube, High Ambient Temperature, Low Sound
9 – Aluminum E-Coat Fin/Copper Tube, High Ambient Temperature, Low Sound
B – Copper E-Coat Fin/Copper Tube, High Ambient Temperature, Low Sound
C – MCHX, High Ambient Temperature, Low Sound
D – MCHX E-Coat, High Ambient Temperature, Low Sound
F – Aluminum Fin/Copper Tube, Standard Ambient Temperature, Low Sound
G – Copper Fin/Copper Tube, Standard Ambient Temperature, Low Sound
H – Aluminum Pre-Coat Fin/Copper Tube, Standard Ambient Temperature, Low Sound
J – Aluminum E-Coated Fin/Copper Tube, Standard Ambient Temperature, Low Sound
K – Copper E-Coat Fin/Copper Tube, Standard Ambient Temperature, Low Sound
L – MCHX, Standard Ambient Temperature, Low Sound
M – MCHX E-Coat, Standard Ambient Temperature, Low Sound
N – Aluminum Fin/Copper Tube, Standard Ambient Temperature
P – Copper Fin/Copper Tube, Standard Ambient Temperature
Q – Aluminum Pre-Coat Fin/Copper Tube, Standard Ambient Temperature
R – Aluminum E-Coat Fin/Copper Tube, Standard Ambient Temperature
S – Copper E-Coat Fin/Copper Tube, Standard Ambient Temperature
T – MCHX, Standard Ambient Temperature
V – MCHX E-Coat, Standard Ambient Temperature

Hydronic Pump Package Options

- – None
1 – Single Pump, 5 HP
2 – Single Pump, 7.5 HP
3 – Single Pump, 10 HP
4 – Single Pump, 15 HP
7 – Dual Pump, 5 HP
8 – Dual Pump, 7.5 HP
B – Dual Pump, 10 HP
C – Dual Pump, 15 HP
G – Single Pump, 5 HP with VFD
H – Single Pump, 7.5 HP with VFD
J – Single Pump, 10 HP with VFD
K – Single Pump, 15 HP with VFD
N – Dual Pump, 5 HP with VFD
P – Dual Pump, 7.5 HP with VFD
Q – Dual Pump, 10 HP with VFD
R – Dual Pump, 15 HP with VFD

Cooler/Brine Options

- – Integral DX Cooler without Heater
0 – Integral Cooler with Heater
1 – Integral DX Cooler with Heater, Hydronic Package
3 – Integral Flooded Cooler with Heater, Minus One Pass
5 – Integral Flooded Cooler with Heater, Plus One Pass
6 – Integral DX Cooler without Heater, Hydronic Package
7 – Integral Cooler with Heater, Full End Screen, Coil Trim Panels, Grilles
8 – Integral DX Cooler with Heater, Hydronic Package, Full End Screen, Coil Trim Panels, Grilles
F – Integral DX Cooler without Heater, Hydronic Package, Full End Screen, Coil Trim Panels, Grilles
G – Integral DX Cooler without Heater, Full End Screen, Coil Trim Panels, Grilles
H – Integral Flooded Cooler with Heater, Plus One Pass, Brine
K – Integral Flooded Cooler with Heater, Minus One Pass, Full End Screen, Coil Trim Panels, Grilles
M – Integral Flooded Cooler with Heater, Plus One Pass, Full End Screen, Coil Trim Panels, Grilles
V – Integral Flooded Cooler with Heater, Plus One Pass, Brine, Full End Screen, Coil Trim Panels, Grilles

Packaging/Security Options

0 – Coil Face Shipping Protection (CFSP), Skid
1 – CFSP, Skid, Top Crate, Bag
3 – CFSP, Coil Trim Panels
4 – CFSP, Skid, Coil Trim Panels
5 – CFSP, Skid, Top Crate, Bag, Coil Trim Panels
7 – CFSP, Coil Trim Panels, Upper and Lower Grilles
8 – CFSP, Skid, Coil Trim Panels, Upper and Lower Grilles
9 – CFSP, Skid, Top Crate, Bag, Coil Trim Panels, Upper and Lower Grilles
C – CFSP, Trim Panels, Upper and Lower Grilles, Upper Hail Guards
D – CFSP, Skid, Coil Trim Panels, Upper and Lower Grilles, Upper Hail Guards
F – CFSP, Skid, Top Crate, Bag, Trim Panels, Upper and Lower Grilles, Upper Hail Guards
L – CFSP

Controls/Communication Options

- – Navigator™ Display
0 – Navigator Display, EMM
1 – Navigator Display, Service Option
2 – Navigator Display, EMM, Service Option
3 – Touch Pilot™ Display
4 – Touch Pilot Display, EMM
5 – Touch Pilot Display, Service Option
6 – Touch Pilot Display, EMM, Service Option
7 – Navigator Display, BACnet Translator
8 – Navigator Display, BACnet Translator, EMM
9 – Navigator Display, BACnet Translator, Service Option
B – Navigator Display, BACnet Translator, EMM, Service Option
C – Touch Pilot Display, BACnet Translator
D – Touch Pilot Display, BACnet Translator, EMM
F – Touch Pilot Display, BACnet Translator, Service Option
G – Touch Pilot Display, BACnet Translator, EMM, Service Option
H – Navigator Display, LON Translator
J – Navigator Display, LON Translator, EMM
K – Navigator Display, LON Translator, Service Option
L – Navigator Display, LON Translator, EMM, Service Option
M – Touch Pilot Display, LON Translator
N – Touch Pilot Display, LON Translator, EMM
P – Touch Pilot Display, LON Translator, Service Option
Q – Touch Pilot Display, LON Translator, EMM, Service Option
R – Navigator Display, BACnet Communication
S – Navigator Display, BACnet Communication, EMM
T – Navigator Display, BACnet Communication, Service Option
V – Navigator Display, BACnet Communication, EMM, Service Option
W – Touch Pilot Display, BACnet Communication
X – Touch Pilot Display, BACnet Communication, EMM
Y – Touch Pilot Display, BACnet Communication, Service Option
Z – Touch Pilot Display, BACnet Communication, EMM, Service Option

Electrical Options

- – Single Point Power, XL, Terminal Block, No Control Transformer
0 – Single Point Power, Wye-Delta, Terminal Block, No Control Transformer
3 – Dual Point Power, XL, Terminal Block, No Control Transformer
4 – Dual Point Power, Wye-Delta, Terminal Block, No Control Transformer
7 – Single Point Power, XL, Disconnect, No Control Transformer
8 – Single Point Power, Wye-Delta, Disconnect, No Control Transformer
C – Dual Point Power, XL, Disconnect, No Control Transformer
D – Dual Point Power, Wye-Delta, Disconnect, No Control Transformer
H – Single Point Power, XL, Terminal Block, Control Transformer
J – Single Point Power, Wye-Delta, Terminal Block, Control Transformer
M – Dual Point Power, XL, Terminal Block, Control Transformer
N – Dual Point Power, Wye-Delta, Terminal Block, Control Transformer
R – Single Point Power, XL, Disconnect, Control Transformer
S – Single Point Power, Wye-Delta, Disconnect, Control Transformer
W – Dual Point Power, XL, Disconnect, Control Transformer
X – Dual Point Power, Wye-Delta, Disconnect, Control Transformer

Refrigeration Circuit Options

- – None
0 – Suction Line Insulation
1 – Isolation Valves
2 – Low Ambient Head Pressure Control
3 – Suction Line Insulation, Isolation Valves
4 – Suction Line Insulation, Low Ambient Head Pressure Control
5 – Isolation Valves, Low Ambient Head Pressure Control
6 – Suction Line Insulation, Isolation Valves, Head Pressure Control
7 – Minimum Load Control
8 – Suction Line Insulation, Minimum Load Control
9 – Isolation Valves, Minimum Load Control
B – Low Ambient Head Pressure Control Operation, Minimum Load Control
C – Suction Line Insulation, Isolation Valves, Minimum Load Control
D – Suction Line Insulation, Head Pressure Control, Minimum Load Control
F – Isolation Valves, Head Pressure Control, Minimum Load Control
G – Suction Line Insulation, Isolation Valves, Head Pressure Control, Minimum Load Control

LEGEND

CFSP — Coil Face Shipping Protection
EMM — Energy Management Module
LON — Local Operating Network
XL — Across-the-Line Starter

* xx0 size units contain flooded style evaporators.
xx2 size units contain direct expansion (DX) style evaporators.

Quality Assurance

Certified to ISO 9001:2000

AHRI* capacity ratings (English and SI)

UNITS WITH AL/CU CONDENSER COILS

30XA UNIT SIZE	CAPACITY		TOTAL POWER (kW)	FULL LOAD		IPLV		COOLER FLOW RATE		COOLER PRESSURE DROP	
	Tons	kW		EER	COP	EER	COP	GPM	L/s	ft wg	kPa
080	75.6	265.5	91.6	9.9	2.9	14.2	4.2	180.7	11.4	11.6	34.7
090	84.8	297.8	95.1	10.7	3.1	14.5	4.3	202.7	12.8	11.4	33.9
100	93.9	330.1	107.8	10.5	3.1	14.9	4.4	224.7	14.2	13.6	40.8
110	102.4	359.9	118.6	10.4	3.0	15.2	4.4	244.9	15.5	13.8	41.3
120	110.7	389.0	129.5	10.3	3.0	15.1	4.4	264.8	16.7	11.8	35.3
140	132.8	466.7	148.7	10.7	3.1	14.3	4.2	317.7	20.0	13.2	39.5
160	152.3	535.1	173.0	10.6	3.1	14.4	4.2	364.2	23.0	13.0	38.9
180	171.3	601.9	192.1	10.7	3.1	14.2	4.2	409.7	25.8	15.4	46.1
200	194.0	681.7	217.2	10.7	3.1	14.8	4.3	464.0	29.3	13.1	39.3
220	211.7	743.7	239.6	10.6	3.1	14.3	4.2	506.2	31.9	15.4	46.1
240	228.1	801.6	264.1	10.4	3.0	14.8	4.3	545.6	34.4	17.7	52.9
260	250.9	881.7	281.7	10.7	3.1	14.3	4.2	600.2	37.9	10.2	30.5
280	268.5	943.4	301.2	10.7	3.1	14.3	4.2	642.1	40.5	11.5	34.3
300	287.5	1010.2	326.3	10.6	3.1	14.5	4.2	687.6	43.4	13.1	39.0
325	306.6	1077.4	347.1	10.6	3.1	14.3	4.2	733.4	46.3	13.4	40.1
350	324.1	1138.7	374.8	10.4	3.0	14.2	4.2	775.1	48.9	14.8	44.4
400	383.6	1348.0	449.4	10.2	3.0	14.8	4.3	917.6	57.9	10.4	31.0
450	426.8	1499.5	509.3	10.1	2.9	14.1	4.1	1020.8	64.4	10.0	29.9
500	458.0	1609.4	549.2	10.0	2.9	14.3	4.2	1095.5	69.1	12.0	36.0

UNITS WITH MCHX CONDENSER COILS

MCHX COILS 30XA UNIT SIZE	CAPACITY		TOTAL POWER (kW)	FULL LOAD		IPLV		COOLER FLOW RATE		COOLER PRESSURE DROP	
	Tons	kW		EER	COP	EER	COP	GPM	L/s	ft wg	kPa
080	75.8	266.4	90.1	10.1	3.0	14.4	4.2	181.4	11.4	11.7	35.0
090	85.2	299.4	93.4	10.9	3.2	14.8	4.3	203.8	12.9	11.5	34.2
100	94.4	331.8	105.7	10.7	3.1	15.2	4.4	225.9	14.3	13.8	41.2
110	103.0	362.0	116.4	10.6	3.1	15.4	4.5	246.4	15.5	14.0	41.8
120	111.4	391.5	127.2	10.5	3.1	15.4	4.5	266.5	16.8	11.9	35.7
140	133.4	468.7	146.4	10.9	3.2	14.4	4.2	319.1	20.1	13.3	39.8
160	153.1	537.8	170.1	10.8	3.2	14.6	4.3	366.1	23.1	13.1	39.3
180	172.0	604.4	189.2	10.9	3.2	14.4	4.2	411.4	26.0	15.5	46.4
200	194.9	684.9	213.7	10.9	3.2	15.1	4.4	466.2	29.4	13.2	39.6
220	212.7	747.3	235.7	10.8	3.2	14.6	4.3	508.7	32.1	15.6	46.5
240	229.2	805.4	260.1	10.6	3.1	15.0	4.4	548.3	34.6	17.9	53.4
260	251.7	884.3	278.8	10.8	3.2	14.4	4.2	601.9	38.0	10.3	30.7
280	269.3	946.2	298.0	10.8	3.2	14.5	4.2	644.1	40.6	11.5	34.5
300	288.3	1012.9	323.3	10.7	3.1	14.7	4.3	689.5	43.5	13.1	39.2
325	307.1	1079.1	344.8	10.7	3.1	14.4	4.2	734.6	46.3	13.5	40.2
350	324.5	1140.2	372.7	10.4	3.1	14.4	4.2	776.2	49.0	14.9	44.5
400	385.0	1352.9	444.1	10.4	3.0	14.9	4.4	920.9	58.1	10.4	31.2
450	427.6	1502.6	505.5	10.2	3.0	14.2	4.2	1022.9	64.5	10.0	30.0
500	459.1	1613.2	544.8	10.1	3.0	14.4	4.2	1098.2	69.3	12.1	36.1

LEGEND

AL — Aluminum
COP — Coefficient of Performance
CU — Copper
EER — Energy Efficiency Ratio
IPLV — Integrated Part Load Value
MCHX — Microchannel Heat Exchanger

*Air Conditioning, Heating, and Refrigeration Institute (U.S.A.).

NOTES:
1. Rated in accordance with AHRI Standard 550/590 at standard rating conditions.
2. Standard rating conditions are as follows:
   Cooler Conditions:
   Leaving water temperature: 44 F (6.7 C)
   Entering water temperature: 54 F (12.2 C)
   Fouling Factor:
   0.00010 hr x sq ft °F/Btu (0.000018 m^2 x °C/W)
   Condenser Conditions:
   Entering air temperature: 95 F (35 C)

Physical data

30XA080-122 — ENGLISH

UNIT 30XA	080	082	090	092	100	102	110	112	120	122
OPERATING WEIGHT (lb)*										
Al-Cu Condenser Coils	7,674	7,831	9,959	10,083	10,186	10,310	10,326	10,563	10,471	10,681
Cu-Cu Condenser Coils	8,398	8,555	10,924	11,048	11,151	11,275	11,291	11,528	11,436	11,646
MCHX Condenser Coils	7,234	7,391	9,382	9,506	9,603	9,727	9,738	9,975	9,877	10,087
REFRIGERANT TYPE	R-134a, EXV Controlled System									
Refrigerant Charge (lb) Ckt A/Ckt B/Ckt C	110/110/—	83/83/—	110/110/—	83/83/—	120/120/—	93/93/—	135/120/—	108/93/—	135/135/—	108/108/—
Refrigerant Charge (lb) Ckt A/Ckt B/Ckt C (MCHX)	93.5/93.5/—	61/61/—	88/88/—	61/61/—	90/90/—	63/63/—	94/90/—	65/63/—	94/94/—	65/65/—
COMPRESSORS	Semi-Hermetic Twin Rotary Screws									
Quantity	2	2	2	2	2	2	2	2	2	2
Speed (rpm)	3500									
(Qty) Compressor Model Number Ckt A	(1) 06TS-137†	06TS-137†	(1) 06TS-137	(1) 06TS-137	(1) 06TS-155	(1) 06TS-155	(1) 06TS-186	(1) 06TS-186	(1) 06TS-186	(1) 06TS-186
(Qty) Compressor Model Number Ckt B	(1) 06TS-137†	06TS-137†	(1) 06TS-137	(1) 06TS-137	(1) 06TS-155	(1) 06TS-155	(1) 06TS-155	(1) 06TS-155	(1) 06TS-186	(1) 06TS-186
(Qty) Compressor Model Number Ckt C	N/A	N/A	N/A	N/A	N/A	N/A	N/A	N/A	N/A	N/A
Oil Charge (gal), Ckt A/Ckt B/Ckt C	5.5/5.5/—	5.5/5.5/—	5.5/5.5/—	5.5/5.5/—	5.5/5.5/—	5.5/5.5/—	5.5/5.5/—	5.5/5.5/—	5.5/5.5/—	5.5/5.5/—
Minimum Capacity Step (%)										
Standard	15	15	15	15	15	15	14	14	15	15
Optional	9	9	9	9	9	9	8	8	10	10
COOLER	Flooded, Shell and Tube Type	Direct Expansion Cooler	Flooded, Shell and Tube Type	Direct Expansion Cooler	Flooded, Shell and Tube Type	Direct Expansion Cooler	Flooded, Shell and Tube Type	Direct Expansion Cooler	Flooded, Shell and Tube Type	Direct Expansion Cooler
Net Fluid Volume (gal.)	16.5	31.3	18.5	31.3	18.5	31.3	20.0	48.6	23.0	48.6
Maximum Refrigerant Pressure (psig)	220	220	220	220	220	220	220	220	220	220
Maximum Water Side Pressure without Pumps (psig)	300	300	300	300	300	300	300	300	300	300
Maximum Water Side Pressure with Pumps (psig)	—	—	150	150	150	150	150	150	150	150
WATER CONNECTIONS										
Drain (NPT, in.)	3/8	3/4	3/8	3/4	3/8	3/4	3/8	3/4	3/8	3/4
Standard, Inlet and Outlet, Victaulic (in.)	5	4	5	4	5	4	5	6	5	6
Number of Passes	2	—	2	—	2	—	2	—	2	—
Minus 1 Pass, Inlet and Outlet, Victaulic (in.)	5	—	5	—	5	—	5	—	5	—
Number of Passes	1	—	1	—	1	—	1	—	1	—
Plus 1 Pass, Inlet and Outlet, Victaulic (in.)	4	—	4	—	4	—	4	—	4	—
Number of Passes	3	—	3	—	3	—	3	—	3	—
CONDENSER FANS	Shrouded Axial Type, Vertical Discharge									
Fan Speed (rpm) Standard/High Ambient**	850/—	850/—	850/—	850/—	850/—	850/—	850/—	850/—	850/—	850/—
No. Blades...Diameter (in.)	9...30	9...30	9...30	9...30	9...30	9...30	9...30	9...30	9...30	9...30
No. Fans (Ckt A/Ckt B/Ckt C)	3/3/—	3/3/—	4/4/—	4/4/—	4/4/—	4/4/—	4/4/—	4/4/—	4/4/—	4/4/—
Total Airflow (cfm) 850 rpm	55,800	55,800	74,400	74,400	74,400	74,400	74,400	74,400	74,400	74,400
Total Airflow (cfm) 1140 rpm	—	—	—	—	—	—	—	—	—	—
CONDENSER COILS										
No. Coils (Ckt A/Ckt B/Ckt C)	3/3/—	3/3/—	4/4/—	4/4/—	4/4/—	4/4/—	4/4/—	4/4/—	4/4/—	4/4/—
Total Face Area (sq ft)	141	141	188	188	188	188	188	188	188	188
HYDRONIC MODULE (Optional)										
Pump	N/A	N/A	Pump(s) with pressure/temperature taps and combination valve. Single or Dual, 3600 rpm							
CHASSIS DIMENSIONS (ft-in.)										
Length	11-10	11-10	15-9							
Width	7-4 3/4									
Height	7-6 7/16									

30XA140-220 — ENGLISH

UNIT 30XA	140	142	160	162	180	182	200	202	220
OPERATING WEIGHT (lb)*									
Al-Cu Condenser Coils	12,760	13,217	13,003	13,429	13,590	13,935	13,712	14,014	14,727
Cu-Cu Condenser Coils	13,966	14,423	14,209	14,635	15,037	15,382	15,159	15,461	16,295
MCHX Condenser Coils	12,023	12,480	12,255	12,681	12,699	13,044	12,810	13,112	13,748
REFRIGERANT TYPE	R-134a, EXV Controlled System								
Refrigerant Charge (lb) Ckt A/Ckt B/Ckt C	202/121/—	177/103/—	225/159/—	201/126/—	205/205/—	181/181/—	225/225/—	201/201/—	270/225/—
Refrigerant Charge (lb) Ckt A/Ckt B/Ckt C (MCHX)	128/90/—	101/59/—	126/94/—	102/61/—	132/132/—	113/113/—	152/152/—	123/123/—	159.5/152/—
COMPRESSORS	Semi-Hermetic Twin Rotary Screws								
Quantity	2	2	2	2	2	2	2	2	2
Speed (rpm)	3500								
(Qty) Compressor Model Number Ckt A	(1) 06TT-266	(1) 06TT-266	(1) 06TT-301	(1) 06TT-301	(1) 06TT-266	(1) 06TT-266	(1) 06TT-301	(1) 06TT-301	(1) 06TT-356
(Qty) Compressor Model Number Ckt B	(1) 06TS-155	(1) 06TS-155	(1) 06TS-186	(1) 06TS-186	(1) 06TT-266	(1) 06TT-266	(1) 06TT-301	(1) 06TT-301	(1) 06TT-301
(Qty) Compressor Model Number Ckt C	N/A	N/A	N/A	N/A	N/A	N/A	N/A	N/A	N/A
Oil Charge (gal), Ckt A/Ckt B/Ckt C	6.25/5.5/—	6.25/5.5/—	6.25/5.5/—	6.25/5.5/—	6.25/6.25/—	6.25/6.25/—	6.25/6.25/—	6.25/6.25/—	6.75/6.25/—
Minimum Capacity Step (%)									
Standard	11	11	11	11	15	15	15	15	14
Optional	7	7	8	8	10	10	10	10	10
COOLER	Flooded, Shell and Tube Type	Direct Expansion Cooler	Flooded, Shell and Tube Type	Direct Expansion Cooler	Flooded, Shell and Tube Type	Direct Expansion Cooler	Flooded, Shell and Tube Type	Direct Expansion Cooler	Flooded, Shell and Tube Type
Net Fluid Volume (gal.)	25.5	63.5	27.5	63.5	31.5	73.5	34.0	73.5	37.0
Maximum Refrigerant Pressure (psig)	220	220	220	220	220	220	220	220	220
Maximum Water Side Pressure without Pumps (psig)	300	300	300	300	300	300	300	300	300
Maximum Water Side Pressure with Pumps (psig)	150	150	150	150	—	—	—	—	—
WATER CONNECTIONS									
Drain (NPT, in.)	3/8	3/4	3/8	3/4	3/8	3/4	3/8	3/4	3/8
Standard, Inlet and Outlet, Victaulic (in.)	5	6	5	6	6	6	6	6	6
Number of Passes	2	—	2	—	2	—	2	—	2
Minus 1 Pass, Inlet and Outlet, Victaulic (in.)	5	—	5	—	8	—	8	—	8
Number of Passes	1	—	1	—	1	—	1	—	1
Plus 1 Pass, Inlet and Outlet, Victaulic (in.)	5	—	5	—	6	—	6	—	6
Number of Passes	3	—	3	—	3	—	3	—	3
CONDENSER FANS	Shrouded Axial Type, Vertical Discharge								
Fan Speed (rpm) Standard/High Ambient**	850/1140	850/1140	850/1140	850/1140	850/1140	850/1140	850/1140	850/1140	850/1140
No. Blades...Diameter (in.)	9...30	9...30	9...30	9...30	9...30	9...30	9...30	9...30	9...30
No. Fans (Ckt A/Ckt B/Ckt C)	6/4/—	6/4/—	6/4/—	6/4/—	6/6/—	6/6/—	6/6/—	6/6/—	7/6/—
Total Airflow (cfm) 850 rpm	93,000	93,000	93,000	93,000	111,600	111,600	111,600	111,600	120,900
Total Airflow (cfm) 1140 rpm	124,000	124,000	124,000	124,000	148,800	148,800	148,800	148,800	161,200
CONDENSER COILS									
No. Coils (Ckt A/Ckt B/Ckt C)	6/4/—	6/4/—	6/4/—	6/4/—	6/6/—	6/6/—	6/6/—	6/6/—	7/6/—
Total Face Area (sq ft)	234	234	234	234	281	281	281	281	305
HYDRONIC MODULE (Optional)									
Pump	Pump(s) with pressure/temperature taps and combination valve. Single or Dual, 3600 rpm					N/A			
CHASSIS DIMENSIONS (ft-in.)									
Length	19-8				23-7				27-6
Width	7-4 3/4								
Height	7-6 7/16								

LEGEND

Cu — Copper
Al — Aluminum
EXV — Electronic Expansion Valve
MCHX — Microchannel Heat Exchanger
N/A — Not Applicable

*Operating weight includes 2 pumps on models 30XA090-162. No pumps are available on 30XA080, 30XA082, or 30XA180-500. All weights include coil trim panels. See pages 10-24 for mounting weights for units without pumps and units with single pump packages.
†30XA080-082 or unit does not have an economizer.
**The high ambient temperature option is not available on 30XA080-122 units.

30XA240-500 — ENGLISH

UNIT 30XA	240	260	280	300	325	350	400	450	500
OPERATING WEIGHT (lb)*									
Al-Cu Condenser Coils	14,887	16,853	17,022	17,362	18,834	19,040	24,578	26,600	26,894
Cu-Cu Condenser Coils	16,455	18,662	18,831	19,292	21,005	21,211	26,990	29,254	29,547
MCHX Condenser Coils	13,897	15,720	15,878	16,141	17,467	17,659	23,038	24,901	25,167
REFRIGERANT TYPE	R-134a, EXV Controlled System								
Refrigerant Charge (lb) Ckt A/Ckt B/Ckt C	270/270/—	375/220/—	375/270/—	415/270/—	375/375/—	415/375/—	270/270/375	415/205/415	415/270/415
Refrigerant Charge (lb) Ckt A/Ckt B/Ckt C (MCHX)	159.5/159/—	233.5/156/—	226.5/159.5/—	230/161/—	226.5/226.5/—	231.5/226.5/—	161/161/203	224/161/215	231/168/215
COMPRESSORS	Semi-Hermetic Twin Rotary Screws								
Quantity	2	2	2	2	2	2	3	3	3
Speed (rpm)	3500								
(Qty) Compressor Model Number Ckt A	(1) 06TT-356	(1) 06TU-483	(1) 06TU-483	(1) 06TU-554	(1) 06TU-483	(1) 06TU-554	(1) 06TT-356	(1) 06TU-554	(1) 06TU-554
(Qty) Compressor Model Number Ckt B	(1) 06TT-356	(1) 06TT-301	(1) 06TT-356	(1) 06TT-356	(1) 06TU-483	(1) 06TU-483	(1) 06TT-356	(1) 06TT-266	(1) 06TT-356
(Qty) Compressor Model Number Ckt C	N/A	N/A	N/A	N/A	N/A	N/A	(1) 06TU-483	(1) 06TU-554	(1) 06TU-554
Oil Charge (gal), Ckt A/Ckt B/Ckt C	6.75/6.75/—	7.5/6.75/—	7.5/6.75/—	7.5/6.75/—	7.5/7.5/—	7.5/7.5/—	6.75/6.75/7.5	7.5/6.25/7.5	7.5/6.75/7.5
Minimum Capacity Step (%)									
Standard	15	11	13	12	15	15	9	6	7
Optional	10	8	9	7	10	10	6	4	5
COOLER	Flooded, Shell and Tube Type								
Net Fluid Volume (gal.)	39.0	42.0	44.0	48.5	50.5	53.4	68.0	75.0	83.0
Maximum Refrigerant Pressure (psig)	220	220	220	220	220	220	220	220	220
Maximum Water Side Pressure without Pumps (psig)	300	300	300	300	300	300	300	300	300
Maximum Water Side Pressure with Pumps (psig)	—	—	—	—	—	—	—	—	—
WATER CONNECTIONS									
Drain (NPT, in.)	3/8	3/8	3/8	3/8	3/8	3/8	3/8	3/8	3/8
Standard, Inlet and Outlet, Victaulic (in.)	6	8	8	8	8	8	8	8	8
Number of Passes	2	2	2	2	2	2	1	1	1
Minus 1 Pass, Inlet and Outlet, Victaulic (in.)	8	8	8	8	8	8	—	—	—
Number of Passes	1	1	1	1	1	1	—	—	—
Plus 1 Pass, Inlet and Outlet, Victaulic (in.)	6	8	8	8	8	8	—	—	—
Number of Passes	3	3	3	3	3	3	—	—	—
CONDENSER FANS	Shrouded Axial Type, Vertical Discharge								
Fan Speed (rpm) Standard/High Ambient**	850/1140	850/1140	850/1140	850/1140	850/1140	850/1140	850/1140	850/1140	850/1140
No. Blades...Diameter (in.)	9...30	9...30	9...30	9...30	9...30	9...30	9...30	9...30	9...30
No. Fans (Ckt A/Ckt B/Ckt C)	7/6/—	9/6/—	9/7/—	10/6/—	9/9/—	9/9/—	6/6/8	8/6/8	8/6/8
Total Airflow (cfm) 850 rpm	120,900	139,500	148,800	148,800	167,400	167,400	186,000	204,600	204,600
Total Airflow (cfm) 1140 rpm	161,200	186,000	198,400	198,400	223,200	223,200	248,000	272,800	272,800
CONDENSER COILS									
No. Coils (Ckt A/Ckt B/Ckt C)	7/6/—	9/6/—	9/7/—	10/6/—	9/9/—	9/9/—	6/6/8	8/6/8	8/6/8
Total Face Area (sq ft)	305	352	375	375	422	422	469	516	516
HYDRONIC MODULE (Optional)	N/A								
Pump									
CHASSIS DIMENSIONS (ft-in.)									
Length	27-6	31-5			35-4		39-3	43-2	
Width	7-4 3/4								
Height	7-6 7/16								

LEGEND

Cu — Copper
Al — Aluminum
EXV — Electronic Expansion Valve
MCHX — Microchannel Heat Exchanger
N/A — Not Applicable

*Operating weight includes 2 pumps on models 30XA090-162. No pumps are available on 30XA080, 30XA082, or 30XA180-500. All weights include coil trim panels. See pages 10-24 for mounting weights for units without pumps and units with single pump packages.
†30XA080-082 or unit does not have an economizer.
**The high ambient temperature option is not available on 30XA080-122 units.

Physical data (cont)

30XA080-122 — SI

UNIT 30XA	080	082	090	092	100	102	110	112	120	122
OPERATING WEIGHT (kg)*										
Al-Cu Condenser Coils	3 481	3 552	4 517	4 573	4 620	4 676	4 684	4 791	4 750	4 845
Cu-Cu Condenser Coils	3 809	3 881	4 955	5 011	5 058	5 114	5 122	5 229	5 187	5 283
MCHX Condenser Coils	3 281	3 353	4 255	4 312	4 356	4 412	4 417	4 525	4 480	4 575
REFRIGERANT TYPE	R-134a, EXV Controlled System									
Refrigerant Charge (kg) Ckt A/Ckt B/Ckt C	50/50/—	38/38/—	50/50/—	38/38/—	54/54/—	42/42/—	61/61/—	49/42/—	61/61/—	49/49/—
Refrigerant Charge (kg) Ckt A/Ckt B/Ckt C (MCHX)	42.4/42.4/—	28/28/—	39.9/39.9/—	28/28/—	40.8/40.8/—	29/29/—	42.6/40.8/—	29/29/—	42.6/42.6/—	29/29/—
COMPRESSORS	Semi-Hermetic Twin Rotary Screws									
Quantity	2	2	2	2	2	2	2	2	2	2
Speed (r/s)	58.3									
(Qty) Compressor Model Number Ckt A	(1) 06TS-137†	06TS-137†	(1) 06TS-137	(1) 06TS-137	(1) 06TS-155	(1) 06TS-155	(1) 06TS-186	(1) 06TS-186	(1) 06TS-186	(1) 06TS-186
(Qty) Compressor Model Number Ckt B	(1) 06TS-137†	06TS-137†	(1) 06TS-137	(1) 06TS-137	(1) 06TS-155	(1) 06TS-155	(1) 06TS-155	(1) 06TS-155	(1) 06TS-186	(1) 06TS-186
(Qty) Compressor Model Number Ckt C	N/A	N/A	N/A	N/A	N/A	N/A	N/A	N/A	N/A	N/A
Oil Charge (liters), Ckt A/Ckt B/Ckt C	20.8/20.8/—	20.8/20.8/—	20.8/20.8/—	20.8/20.8/—	20.8/20.8/—	20.8/20.8/—	20.8/20.8/—	20.8/20.8/—	20.8/20.8/—	20.8/20.8/—
Minimum Capacity Step (%)										
Standard	15	15	15	15	15	15	14	14	15	15
Optional	9	9	9	9	9	9	8	8	10	10
COOLER	Flooded, Shell and Tube Type	Direct Expansion Cooler	Flooded, Shell and Tube Type	Direct Expansion Cooler	Flooded, Shell and Tube Type	Direct Expansion Cooler	Flooded, Shell and Tube Type	Direct Expansion Cooler	Flooded, Shell and Tube Type	Direct Expansion Cooler
Net Fluid Volume (liters)	62.5	118	70.0	118	70.0	118	75.7	184	87.1	184
Maximum Refrigerant Pressure (kPa)	1516.8	1516.8	1516.8	1516.8	1516.8	1516.8	1516.8	1516.8	1516.8	1516.8
Maximum Water Side Pressure without Pumps (kPa)	2 068	2068	2 068	2068	2 068	2068	2 068	2068	2 068	2068
Maximum Water Side Pressure with Pumps	—	—	1 034	1034	1 034	1034	1 034	1034	1 034	1034
WATER CONNECTIONS										
Drain (NPT, in.)	3/8	3/4	3/8	3/4	3/8	3/4	3/8	3/4	3/8	3/4
Standard, Inlet and Outlet, Victaulic (in.)	5	4	5	4	5	4	5	6	5	6
Number of Passes	2	—	2	—	2	—	2	—	2	—
Minus 1 Pass, Inlet and Outlet, Victaulic (in.)	5	—	5	—	5	—	5	—	5	—
Number of Passes	1	—	1	—	1	—	1	—	1	—
Plus 1 Pass, Inlet and Outlet, Victaulic (in.)	4	—	4	—	4	—	4	—	4	—
Number of Passes	3	—	3	—	3	—	3	—	3	—
CONDENSER FANS	Shrouded Axial Type, Vertical Discharge									
Fan Speed (r/s) Standard/High Ambient**	14.2/—	14.2/—	14.2/—	14.2/—	14.2/—	14.2/—	14.2/—	14.2/—	14.2/—	14.2/—
No. Blades...Diameter (mm)	9...762	9...762	9...762	9...762	9...762	9...762	9...762	9...762	9...762	9...762
No. Fans (Ckt A/Ckt B/Ckt C)	3/3/—	3/3/—	4/4/—	4/4/—	4/4/—	4/4/—	4/4/—	4/4/—	4/4/—	4/4/—
Total Airflow (L/s) 14.2 r/s	26 335	26 335	35 113	35 113	35 113	35 113	35 113	35 113	35 113	35 113
Total Airflow (L/s) 19.0 r/s	—	—	—	—	—	—	—	—	—	—
CONDENSER COILS										
No. Coils (Ckt A/Ckt B/Ckt C)	3/3/—	3/3/—	4/4/—	4/4/—	4/4/—	4/4/—	4/4/—	4/4/—	4/4/—	4/4/—
Total Face Area (sq m)	13	13	17	17	17	17	17	17	17	17
HYDRONIC MODULE (Optional)										
Pump	N/A	N/A	Pump(s) with pressure/temperature taps and combination valve. Single or Dual, 58.3 r/s							
CHASSIS DIMENSIONS (mm)										
Length	3 606	3 606	4 800							
Width	2255									
Height	2300									

30XA140-220 — SI

UNIT 30XA	140	142	160	162	180	182	200	202	220
OPERATING WEIGHT (kg)*									
Al-Cu Condenser Coils	5 788	5 995	5 898	6 091	6 164	6 321	6 220	6 357	6 680
Cu-Cu Condenser Coils	6 335	6 542	6 445	6 638	6 821	6 977	6 876	7 013	7 391
MCHX Condenser Coils	5 454	5 661	5 559	5 752	5 760	5 917	5 811	5 948	6 236
REFRIGERANT TYPE	R-134a, EXV Controlled System								
Refrigerant Charge (kg) Ckt A/Ckt B/Ckt C	92/55/—	80/47/—	102/72/—	91/57/—	93/93/—	82/82/—	102/102—	91/91/—	112/102/—
Refrigerant Charge (kg) Ckt A/Ckt B/Ckt C (MCHX)	58.0/40.8/—	46/27/—	57.2/42.6/—	46/28/—	59.9/59.9/—	51/51/—	68.9/68.9/—	56/56/—	72.3/68.9/—
COMPRESSORS	Semi-Hermetic Twin Rotary Screws								
Quantity	2	2	2	2	2	2	2	2	2
Speed (r/s)	58.3								
(Qty) Compressor Model Number Ckt A	(1) 06TT-266	(1) 06TT-266	(1) 06TT-301	(1) 06TT-301	(1) 06TT-266	(1) 06TT-266	(1) 06TT-301	(1) 06TT-301	(1) 06TT-356
(Qty) Compressor Model Number Ckt B	(1) 06TS-155	(1) 06TS-155	(1) 06TS-186	(1) 06TS-186	(1) 06TT-266	(1) 06TT-266	(1) 06TT-301	(1) 06TT-301	(1) 06TT-301
(Qty) Compressor Model Number Ckt C	N/A	N/A	N/A	N/A	N/A	N/A	N/A	N/A	N/A
Oil Charge (liters), Ckt A/Ckt B/Ckt C	23.7/20.8/—	23.7/20.8/—	23.7/23.7/—	23.7/23.7/—	23.7/23.7/—	23.7/23.7/—	23.7/23.7/—	23.7/23.7/—	25.6/23.7/—
Minimum Capacity Step (%)									
Standard	11	11	11	11	15	15	15	15	14
Optional	7	7	8	8	10	10	10	10	10
COOLER	Flooded, Shell and Tube Type	Direct Expansion Cooler	Flooded, Shell and Tube Type	Direct Expansion Cooler	Flooded, Shell and Tube Type	Direct Expansion Cooler	Flooded, Shell and Tube Type	Direct Expansion Cooler	Flooded, Shell and Tube Type
Net Fluid Volume (liters)	96.5	240	104.1	240	119.2	278	128.7	278	140.1
Maximum Refrigerant Pressure (kPa)	1516.8	1516.8	1516.8	1516.8	1516.8	1516.8	1516.8	1516.8	1516.8
Maximum Water Side Pressure without Pumps (kPa)	2 068	2068	2 068	2068	2 068	2068	2 068	2068	2 068
Maximum Water Side Pressure with Pumps	1 034	1034	1 034	1034	—	—	—	—	—
WATER CONNECTIONS									
Drain (NPT, in.)	3/8	3/4	3/8	3/4	3/8	3/4	3/8	3/4	3/8
Standard, Inlet and Outlet, Victaulic (in.)	5	6	5	6	6	6	6	6	6
Number of Passes	2	—	2	—	2	—	2	—	2
Minus 1 Pass, Inlet and Outlet, Victaulic (in.)	5	—	5	—	8	—	8	—	8
Number of Passes	1	—	1	—	1	—	1	—	1
Plus 1 Pass, Inlet and Outlet, Victaulic (in.)	5	—	5	—	6	—	6	—	6
Number of Passes	3	—	3	—	3	—	3	—	3
CONDENSER FANS	Shrouded Axial Type, Vertical Discharge								
Fan Speed (r/s) Standard/High Ambient**	14.2/19.0	14.2/19.0	14.2/19.0	14.2/19.0	14.2/19.0	14.2/19.0	14.2/19.0	14.2/19.0	14.2/19.0
No. Blades...Diameter (mm)	9...762	9...762	9...762	9...762	9...762	9...762	9...762	9...762	9...762
No. Fans (Ckt A/Ckt B/Ckt C)	6/4/—	6/4/—	6/4/—	6/4/—	6/6/—	6/6/—	6/6/—	6/6/—	7/6/—
Total Airflow (L/s) 14.2 r/s	43 891	43 891	43 891	43 891	52 669	52 669	52 669	52 669	57 059
Total Airflow (L/s) 19.0 r/s	58 522	58 522	58 522	58 522	70 226	70 226	70 226	70 226	76 078
CONDENSER COILS									
No. Coils (Ckt A/Ckt B/Ckt C)	6/4/—	6/4/—	6/4/—	6/4/—	6/6/—	6/6/—	6/6/—	6/6/—	7/6/—
Total Face Area (sq m)	22	22	22	22	26	26	26	26	28
HYDRONIC MODULE (Optional)	Pump(s) with pressure/temperature taps and combination valve. Single or Dual, 58.3 r/s				N/A				
CHASSIS DIMENSIONS (mm)									
Length	5 994				7 188				8 382
Width	2255								
Height	2300								

LEGEND

Cu — Copper
Al — Aluminum
EXV — Electronic Expansion Valve
MCHX — Microchannel Heat Exchanger
N/A — Not Applicable

*Operating weight includes 2 pumps on models 30XA090-160. No pumps are available on 30XA080 or 30XA180-500. All weights include coil trim panels. See pages 10-24 for mounting weights for units without pumps and units with single pump packages.
†30XA080 unit does not have an economizer.
**The high ambient temperature option is not available on 30XA080-120 units.

30XA240-500 — SI

UNIT 30XA	240	260	280	300	325	350	400	450	500
OPERATING WEIGHT (kg)*									
Al-Cu Condenser Coils	6 753	7 644	7 721	7 876	8 543	8 636	11 149	12 066	12 199
Cu-Cu Condenser Coils	7 464	8 465	8 542	8 751	9 528	9 621	12 243	13 269	13 402
MCHX Condenser Coils	6 304	7 130	7 202	7 322	7 923	8 010	10 450	11 295	11 416
REFRIGERANT TYPE	R-134a, EXV Controlled System								
Refrigerant Charge (kg) Ckt A/Ckt B/Ckt C	122.5/122.5/—	170.1/99.8/—	170.1/122.5/—	188.3/122.5/—	170.1/170.1/—	188.3/170.1/—	122.5/122.5/170.1	188.3/102/188.3	188.3/188.3/122.5
Refrigerant Charge (kg) Ckt A/Ckt B/Ckt C (MCHX)	72.3/72.1/—	105.9/70.8/—	102.7/72.3/—	104.3/73.0/—	102.7/102.7/—	105.0/102.7/—	73.0/73.0/92.1	101.6/73.0/97.5	104.8/76.2/97.5
COMPRESSORS	Semi-Hermetic Twin Rotary Screws								
Quantity	2	2	2	2	2	2	3	3	3
Speed (r/s)	3500								
(Qty) Compressor Model Number Ckt A	(1) 06TT-356	(1) 06TU-483	(1) 06TU-483	(1) 06TU-554	(1) 06TU-483	(1) 06TU-554	(1) 06TT-356	(1) 06TU-554	(1) 06TU-554
(Qty) Compressor Model Number Ckt B	(1) 06TT-356	(1) 06TT-301	(1) 06TT-356	(1) 06TT-356	(1) 06TU-483	(1) 06TU-483	(1) 06TT-356	(1) 06TT-266	(1) 06TT-356
(Qty) Compressor Model Number Ckt C	N/A	N/A	N/A	N/A	N/A	N/A	(1) 06TU-483	(1) 06TU-554	(1) 06TU-554
Oil Charge (liter), Ckt A/Ckt B/Ckt C	25.6/25.6/—	28.4/25.6/—	28.4/25.6/—	28.4/25.6/—	28.4/28.4/—	28.4/28.4/—	25.6/25.6/28.4	28.4/23.7/28.4	28.4/25.6/28.4
Minimum Capacity Step (%)									
Standard	15	10	13	12	15	14	9	6	7
Optional	10	8	9	7	10	10	6	4	5
COOLER	Flooded, Shell and Tube Type								
Net Fluid Volume (liters)	147.6	159.0	166.6	183.6	191.2	202.1	257.4	283.9	314.2
Maximum Refrigerant Pressure (kPa)	1516.8	1516.8	1516.8	1516.8	1516.8	1516.8	1516.8	1516.8	1516.8
Maximum Water Side Pressure without Pumps (kPa)	2 068	2 068	2 068	2 068	2 068	2 068	2 068	2 068	2 068
Maximum Water Side Pressure with Pumps	—	—	—	—	—	—	—	—	—
WATER CONNECTIONS									
Drain (NPT, in.)	3/8	3/8	3/8	3/8	3/8	3/8	3/8	3/8	3/8
Standard, Inlet and Outlet, Victaulic (in.)	6	8	8	8	8	8	8	8	8
Number of Passes	2	2	2	2	2	2	1	1	1
Minus 1 Pass, Inlet and Outlet, Victaulic (in.)	8	8	8	8	8	8	—	—	—
Number of Passes	1	1	1	1	1	1	—	—	—
Plus 1 Pass, Inlet and Outlet, Victaulic (in.)	6	8	8	8	8	8	—	—	—
Number of Passes	3	3	3	3	3	3	—	—	—
CONDENSER FANS	Shrouded Axial Type, Vertical Discharge								
Fan Speed (r/s) Standard/High Ambient**	14.2/19.0	14.2/19.0	14.2/19.0	14.2/19.0	14.2/19.0	14.2/19.0	14.2/19.0	14.2/19.0	14.2/19.0
No. Blades...Diameter (mm)	9...762	9...762	9...762	9...762	9...762	9...762	9...762	9...762	9...762
No. Fans (Ckt A/Ckt B/Ckt C)	7/6/—	9/6/—	9/7/—	10/6/—	9/9/—	9/9/—	6/6/8	8/6/8	8/6/8
Total Airflow (L/s) 14.2 r/s	57 059	65 837	70 226	70 226	79 004	79 004	87 782	96 561	96 561
Total Airflow (L/s) 19.0 r/s	76 078	87 782	93 634	93 634	93 634	105 339	117 043	128 747	128 747
CONDENSER COILS									
No. Coils (Ckt A/Ckt B/Ckt C)	7/6/—	9/6/—	9/7/—	10/6/—	9/9/—	9/9/—	6/6/8	8/6/8	8/6/8
Total Face Area (sq m)	28	33	35	35	39	39	44	48	48
HYDRONIC MODULE (Optional)									
Pump	N/A								
CHASSIS DIMENSIONS (mm)									
Length	8 382	9 576			10 770		11 964	13 158	
Width	2 255								
Height	2 300								

LEGEND

Cu — Copper
Al — Aluminum
EXV — Electronic Expansion Valve
MCHX — Microchannel Heat Exchanger
N/A — Not Applicable

*Operating weight includes 2 pumps on models 30XA090-160. No pumps are available on 30XA080 or 30XA180-500. All weights include coil trim panels. See pages 10-24 for mounting weights for units without pumps and units with single pump packages.
†30XA080 unit does not have an economizer.
**The high ambient temperature option is not available on 30XA080-120 units.

Physical data (cont)

UNIT MOUNTING WEIGHTS
UNITS WITHOUT PUMPS AND WITH MCHX CONDENSER COILS — ENGLISH

30XA UNIT SIZE	MOUNTING WEIGHT (lb) MCHX CONDENSER COILS				
	A	B	C	D	Total
080	1947	1673	1670	1943	7234
082	1989	1709	1706	1985	7391

30XA UNIT SIZE	MOUNTING WEIGHT (lb) MCHX CONDENSER COILS						
	A	B	C	D	E	F	Total
090	1201	2043	750	951	1983	1199	8127
092	1219	2074	761	965	2013	1217	8251
100	1226	2098	780	981	2038	1224	8348
102	1244	2129	792	996	2068	1242	8472
110	1239	2136	798	1006	2075	1229	8483
112	1274	2196	820	1034	2133	1263	8720
120	1272	2174	800	1007	2106	1263	8622
122	1303	2227	819	1032	2157	1294	8832

30XA UNIT SIZE	MOUNTING WEIGHT (lb) MCHX CONDENSER COILS								
	A	B	C	D	E	F	G	H	Total
140	1897	1444	864	1181	1217	883	1584	1699	10,768
142	1977	1505	901	1231	1269	920	1651	1771	11,225
160	1949	1469	878	1206	1246	899	1603	1750	11,000
162	2024	1526	912	1253	1294	934	1665	1818	11,426

30XA UNIT SIZE	MOUNTING WEIGHT (lb) MCHX CONDENSER COILS										
	A	B	C	D	E	F	G	H	I	J	Total
180	905	1484	1164	1849	1187	1224	1868	840	1289	888	12,699
182	930	1524	1196	1899	1219	1257	1919	863	1324	912	13,044
200	909	1499	1188	1870	1192	1232	1879	848	1299	893	12,810
202	930	1534	1216	1914	1220	1261	1923	868	1330	914	13,112

30XA UNIT SIZE	MOUNTING WEIGHT (lb) MCHX CONDENSER COILS												
	A	B	C	D	E	F	G	H	I	J	K	L	Total
220	813	1196	1592	1498	828	1216	1259	848	1363	1064	1237	832	13,748
240	829	1218	1617	1520	830	1218	1261	850	1371	1073	1260	849	13,897
260	495	1431	1630	763	2465	1013	1528	2380	800	1333	1386	495	15,720
280	497	1451	1663	771	2497	1015	1530	2390	803	1358	1406	497	15,878
300	502	1465	1686	786	2568	1027	1557	2454	811	1367	1417	502	16,141

30XA UNIT SIZE	MOUNTING WEIGHT (lb) MCHX CONDENSER COILS														
	A	B	C	D	E	F	G	H	I	J	K	L	M	N	Total
325	742	742	978	1531	783	2546	1067	1563	2334	804	1646	1247	742	742	17,467
350	745	745	982	1546	792	2598	1077	1589	2386	808	1651	1249	745	745	17,659

30XA UNIT SIZE	MOUNTING WEIGHT (lb) MCHX CONDENSER COILS																
	A	B	C	D	E	F	G	H	I	J	K	L	M	N	O	P	Total
400	847	1234	1511	2965	1255	789	2214	1071	1566	2286	747	1265	2152	991	1277	868	23,038
450	856	1179	2160	2282	905	1057	2030	2053	2711	1934	1551	1266	1440	1385	1216	876	24,901
500	843	1236	2207	2334	909	1060	2037	2060	2718	1941	1555	1269	1457	1401	1279	863	25,167

UNIT MOUNTING WEIGHTS (cont)

UNITS WITHOUT PUMPS AND WITH MCHX CONDENSER COILS — SI

30XA UNIT SIZE	MOUNTING WEIGHT (kg) MCHX CONDENSER COILS				
	A	B	C	D	Total
080	883	759	758	882	3281
082	902	775	774	900	3353

30XA UNIT SIZE	MOUNTING WEIGHT (kg) MCHX CONDENSER COILS						
	A	B	C	D	E	F	Total
090	545	927	340	431	899	544	3686
092	553	941	345	438	913	552	3742
100	556	952	354	445	924	555	3786
102	564	966	359	452	938	563	3843
110	562	969	362	456	941	558	3848
112	578	996	372	469	968	573	3955
120	577	986	363	457	955	573	3911
122	591	1010	372	468	979	587	4006

30XA UNIT SIZE	MOUNTING WEIGHT (kg) MCHX CONDENSER COILS								
	A	B	C	D	E	F	G	H	Total
140	860	655	392	536	552	401	719	771	4884
142	897	683	409	558	575	418	749	803	5091
160	884	666	398	547	565	408	727	794	4990
162	918	692	414	568	587	424	755	825	5183

30XA UNIT SIZE	MOUNTING WEIGHT (kg) MCHX CONDENSER COILS										
	A	B	C	D	E	F	G	H	I	J	Total
180	410	673	528	839	538	555	847	381	584	403	5760
182	422	691	542	861	553	570	870	391	601	414	5917
200	412	680	539	848	541	559	852	385	589	405	5811
202	422	696	552	868	553	572	872	394	603	415	5948

30XA UNIT SIZE	MOUNTING WEIGHT (kg) MCHX CONDENSER COILS												
	A	B	C	D	E	F	G	H	I	J	K	L	Total
220	369	542	722	680	376	552	571	385	618	483	561	378	6236
240	376	552	734	690	377	553	572	386	622	487	572	385	6304
260	225	649	740	346	1118	460	693	1079	363	605	629	225	7130
280	225	658	754	350	1133	461	694	1084	364	616	638	225	7202
300	228	664	765	357	1165	466	706	1113	368	620	643	228	7322

30XA UNIT SIZE	MOUNTING WEIGHT (kg) MCHX CONDENSER COILS														
	A	B	C	D	E	F	G	H	I	J	K	L	M	N	Total
325	337	337	444	695	355	1155	484	709	1058	365	746	565	337	337	7923
350	338	338	446	701	359	1179	488	721	1082	367	749	567	338	338	8010

30XA UNIT SIZE	MOUNTING WEIGHT (kg) MCHX CONDENSER COILS																
	A	B	C	D	E	F	G	H	I	J	K	L	M	N	O	P	Total
400	384	560	685	1345	569	358	1004	486	710	1037	339	574	976	450	579	394	10 450
450	388	535	980	1035	411	479	921	931	1230	877	704	574	653	628	551	397	11 295
500	382	561	1001	1059	412	481	924	934	1233	880	705	576	661	635	580	391	11 416

Physical data (cont)

UNIT MOUNTING WEIGHTS (cont)
UNITS WITHOUT PUMPS AND WITH MCHX CONDENSER COILS

30XA080,082

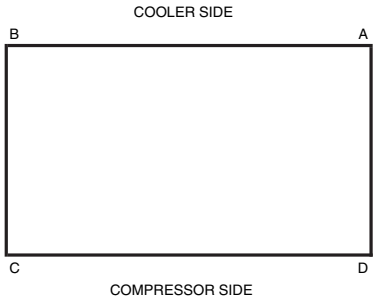

30XA220-300

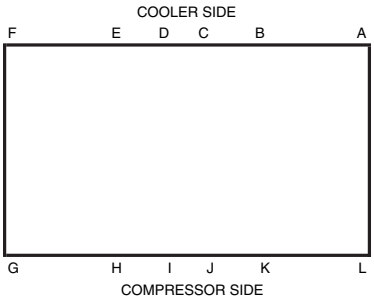

30XA090-122

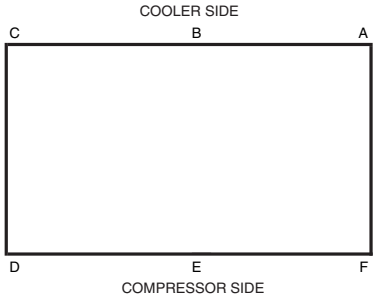

30XA325,350

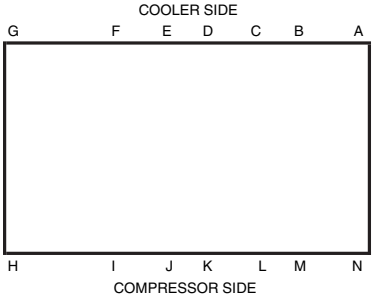

30XA140-162

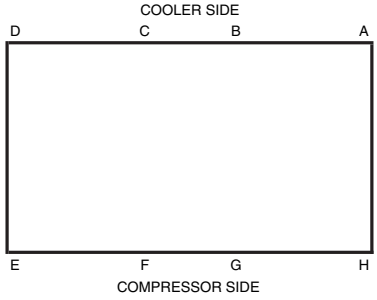

30XA400-500

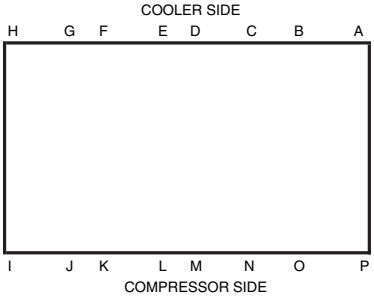

30XA180-202

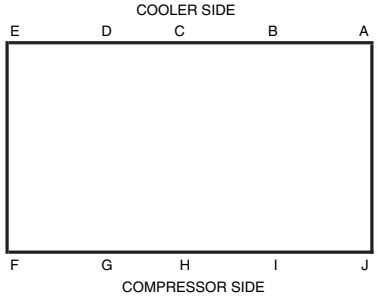

LEGEND

MCHX — Microchannel Heat Exchanger

UNIT MOUNTING WEIGHTS (cont)

SINGLE PUMP UNITS WITH MCHX CONDENSER COILS — ENGLISH

30XA UNIT SIZE	MOUNTING WEIGHT (lb) MCHX CONDENSER COILS						
	A	B	C	D	E	F	Total
090	1201	2754	1087	900	1944	1199	9085
092	1217	2791	1102	912	1970	1215	9209
100	1226	2814	1123	924	1995	1224	9306
102	1242	2851	1138	936	2022	1240	9430
110	1239	2855	1145	945	2027	1229	9441
112	1270	2927	1174	969	2078	1260	9678
120	1272	2893	1147	947	2059	1263	9580
122	1300	2956	1172	968	2104	1291	9790

30XA UNIT SIZE	MOUNTING WEIGHT (lb) MCHX CONDENSER COILS								
	A	B	C	D	E	F	G	H	Total
140	1897	1444	1609	1606	1078	810	1584	1699	11,726
142	1971	1500	1672	1669	1120	842	1646	1765	12,183
160	1949	1469	1626	1635	1103	824	1603	1750	11,958
162	2018	1521	1684	1693	1142	853	1660	1812	12,384

SINGLE PUMP UNITS WITH MCHX CONDENSER COILS — SI

30XA UNIT SIZE	MOUNTING WEIGHT (kg) MCHX CONDENSER COILS						
	A	B	C	D	E	F	Total
090	545	1249	493	408	882	544	4121
092	552	1266	500	414	894	551	4177
100	556	1276	510	419	905	555	4221
102	563	1293	516	425	917	563	4277
110	562	1295	519	429	920	558	4282
112	576	1328	532	439	943	571	4390
120	577	1312	520	430	934	573	4346
122	590	1341	532	439	954	585	4441

30XA UNIT SIZE	MOUNTING WEIGHT (kg) MCHX CONDENSER COILS								
	A	B	C	D	E	F	G	H	Total
140	860	655	730	728	489	367	719	771	5319
142	894	680	758	757	508	382	746	801	5526
160	884	666	737	742	500	374	727	794	5424
162	916	690	764	768	518	387	753	822	5617

30XA090-122

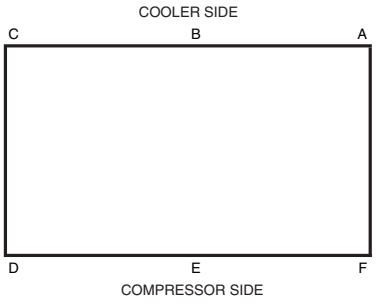

30XA140-162

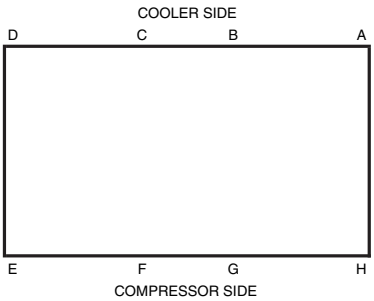

LEGEND

MCHX — Microchannel Heat Exchanger

UNIT MOUNTING WEIGHTS (cont)

DUAL PUMP UNITS WITH MCHX CONDENSER COILS — ENGLISH

30XA UNIT SIZE	MOUNTING WEIGHT (lb) MCHX CONDENSER COILS						
	A	B	C	D	E	F	Total
090	1201	2962	1176	900	1944	1199	9,382
092	1217	3001	1192	912	1970	1215	9,506
100	1226	3022	1212	924	1995	1224	9,603
102	1242	3061	1228	936	2021	1240	9,727
110	1239	3064	1234	945	2027	1229	9,738
112	1269	3139	1264	968	2076	1259	9,975
120	1272	3101	1236	947	2059	1263	9,877
122	1299	3167	1262	967	2103	1290	10,087

30XA UNIT SIZE	MOUNTING WEIGHT (lb) MCHX CONDENSER COILS								
	A	B	C	D	E	F	G	H	Total
140	1897	1444	1818	1694	1078	810	1584	1699	12,023
142	1969	1499	1887	1758	1119	841	1644	1764	12,480
160	1949	1469	1834	1724	1103	824	1603	1750	12,255
162	2017	1520	1898	1784	1141	853	1659	1811	12,681

DUAL PUMP UNITS WITH MCHX CONDENSER COILS — SI

30XA UNIT SIZE	MOUNTING WEIGHT (kg) MCHX CONDENSER COILS						
	A	B	C	D	E	F	Total
090	545	1343	533	408	882	544	4255
092	552	1361	540	414	893	551	4312
100	556	1371	550	419	905	555	4356
102	563	1388	557	425	917	562	4412
110	562	1390	560	429	920	558	4417
112	576	1424	573	439	942	571	4525
120	577	1407	560	430	934	573	4480
122	589	1436	573	439	954	585	4575

30XA UNIT SIZE	MOUNTING WEIGHT (kg) MCHX CONDENSER COILS								
	A	B	C	D	E	F	G	H	Total
140	860	655	825	769	489	367	719	771	5454
142	893	680	856	798	508	381	746	800	5661
160	884	666	832	782	500	374	727	794	5559
162	915	689	861	809	518	387	752	821	5752

30XA090-122

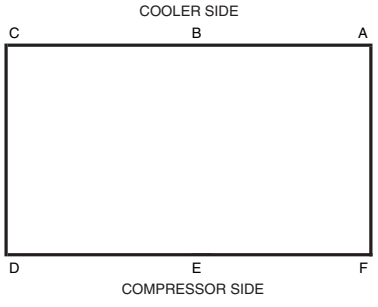

30XA140-162

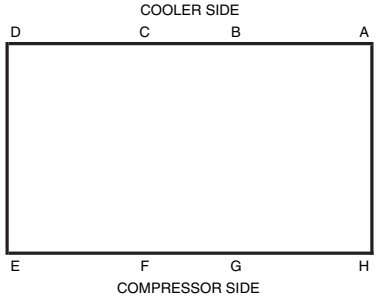

LEGEND

MCHX — Microchannel Heat Exchanger

UNIT MOUNTING WEIGHTS (cont)

UNITS WITHOUT PUMPS AND WITH Al/Cu CONDENSER COILS — ENGLISH

30XA UNIT SIZE	MOUNTING WEIGHT (lb) — Al/Cu*				
	A	B	C	D	Total
080	2059	1785	1778	2051	7674
082	2101	1822	1814	2093	7831

30XA UNIT SIZE	MOUNTING WEIGHT (lb) — Al/Cu*						
	A	B	C	D	E	F	Total
090	1273	2188	822	1023	2127	1271	8704
092	1291	2219	834	1038	2157	1289	8828
100	1299	2244	853	1054	2184	1297	8931
102	1317	2275	865	1069	2214	1315	9055
110	1312	2284	872	1079	2222	1303	9071
112	1346	2344	895	1107	2280	1337	9308
120	1346	2322	874	1082	2255	1337	9216
122	1377	2375	894	1107	2306	1367	9426

30XA UNIT SIZE	MOUNTING WEIGHT (lb) — Al/Cu*								
	A	B	C	D	E	F	G	H	Total
140	2007	1554	938	1254	1291	957	1695	1809	11,505
142	2087	1616	975	1304	1342	995	1762	1881	11,962
160	2061	1581	953	1281	1321	974	1715	1862	11,748
162	2136	1638	988	1327	1369	1009	1777	1930	12,174

30XA UNIT SIZE	MOUNTING WEIGHT (lb) — Al/Cu*										
	A	B	C	D	E	F	G	H	I	J	Total
180	979	1558	1239	1998	1261	1298	2016	915	1363	962	13,590
182	1004	1598	1270	2049	1293	1331	2067	938	1398	986	13,935
200	984	1574	1263	2020	1267	1308	2029	923	1375	968	13,712
202	106	1609	1291	2065	1295	1337	2074	943	1405	989	14,014

30XA UNIT SIZE	MOUNTING WEIGHT (lb) — Al/Cu*												
	A	B	C	D	E	F	G	H	I	J	K	L	Total
220	883	1266	1697	1603	898	1286	1329	918	1468	1169	1307	902	14,727
240	900	1288	1723	1626	901	1289	1331	921	1477	1179	1331	920	14,887
260	566	1572	1701	834	2607	1084	1599	2521	871	1404	1528	566	16,853
280	569	1594	1734	843	2640	1087	1601	2533	875	1429	1549	569	17,022
300	578	1617	1762	862	2720	1103	1633	2607	887	1444	1570	578	17,362

30XA UNIT SIZE	MOUNTING WEIGHT (lb) — Al/Cu*														
	A	B	C	D	E	F	G	H	I	J	K	L	M	N	Total
325	856	856	1054	1607	859	2697	1143	1639	2485	880	1722	1322	856	856	18,834
350	860	860	1059	1623	869	2752	1153	1666	2539	885	1727	1326	860	860	19,040

30XA UNIT SIZE	MOUNTING WEIGHT (lb) — Al/Cu*																
	A	B	C	D	E	F	G	H	I	J	K	L	M	N	O	P	Total
400	924	1311	1588	3119	1332	866	2368	1148	1643	2440	824	1342	2306	1069	1354	945	24,578
450	933	1256	2276	2398	982	1134	2184	2207	2866	2089	1629	1343	1556	1501	1293	953	26,600
500	921	1314	2325	2452	987	1139	2194	2217	2875	2098	1633	1348	1575	1519	1357	941	26,894

*Condenser Coil: Aluminum Fins/Copper Tubing.

Physical data (cont)

UNIT MOUNTING WEIGHTS (cont)

UNITS WITHOUT PUMPS AND WITH Al/Cu CONDENSER COILS — SI

30XA UNIT SIZE	MOUNTING WEIGHT (kg) — Al/Cu*				
	A	B	C	D	Total
080	934	810	807	930	3481
082	953	826	823	949	3552

30XA UNIT SIZE	MOUNTING WEIGHT (kg) — Al/Cu*						
	A	B	C	D	E	F	Total
090	578	992	373	464	965	576	3948
092	586	1007	378	471	979	585	4004
100	589	1018	387	478	991	588	4051
102	597	1032	392	485	1004	596	4107
110	595	1036	396	489	1008	591	4115
112	611	1063	406	502	1034	606	4222
120	611	1053	397	491	1023	607	4181
122	624	1077	405	502	1046	620	4276

30XA UNIT SIZE	MOUNTING WEIGHT (kg) — Al/Cu*								
	A	B	C	D	E	F	G	H	Total
140	910	705	425	569	585	434	769	821	5219
142	946	733	442	591	609	451	799	853	5426
160	935	717	432	581	599	442	778	845	5329
162	969	743	448	602	621	458	806	875	5522

30XA UNIT SIZE	MOUNTING WEIGHT (kg) — Al/Cu*										
	A	B	C	D	E	F	G	H	I	J	Total
180	444	707	562	906	572	589	915	415	618	436	6164
182	455	725	576	929	586	604	938	426	634	447	6321
200	446	714	573	916	575	593	920	419	624	439	6220
202	456	730	586	936	587	606	941	428	637	449	6357

30XA UNIT SIZE	MOUNTING WEIGHT (kg) — Al/Cu*												
	A	B	C	D	E	F	G	H	I	J	K	L	Total
220	401	574	770	727	407	583	603	416	666	530	593	409	6680
240	408	584	782	738	409	585	604	418	670	535	604	417	6753
260	257	713	772	378	1182	492	725	1144	395	637	693	257	7644
280	258	723	787	382	1197	493	726	1149	397	648	703	258	7721
300	262	734	799	391	1234	501	741	1182	402	655	712	262	7876

30XA UNIT SIZE	MOUNTING WEIGHT (kg) — Al/Cu*														
	A	B	C	D	E	F	G	H	I	J	K	L	M	N	Total
325	388	388	478	729	390	1224	518	744	1127	399	781	600	388	388	8543
350	390	390	480	736	394	1248	523	756	1152	401	784	601	390	390	8636

30XA UNIT SIZE	MOUNTING WEIGHT (kg) — Al/Cu*																
	A	B	C	D	E	F	G	H	I	J	K	L	M	N	O	P	Total
400	419	595	720	1415	604	393	1074	521	745	1107	374	609	1046	485	614	428	11 149
450	423	570	1032	1088	446	514	991	1001	1300	948	739	609	706	681	586	432	12 066
500	418	596	1055	1112	448	516	995	1005	1304	952	741	611	714	689	616	427	12 199

*Condenser Coil: Aluminum Fins/Copper Tubing.

UNIT MOUNTING WEIGHTS (cont)

UNITS WITHOUT PUMPS AND WITH Al/Cu CONDENSER COILS

30XA080,082

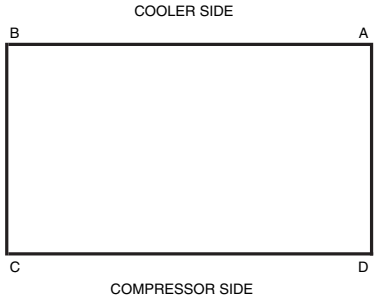

30XA220-300

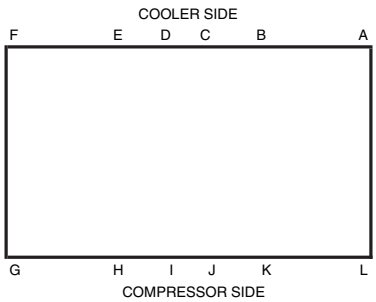

30XA090-122

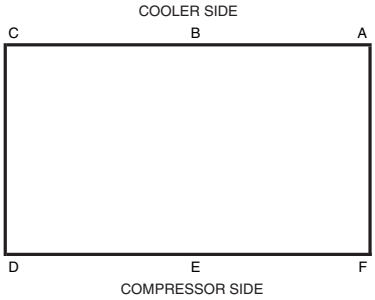

30XA325,350

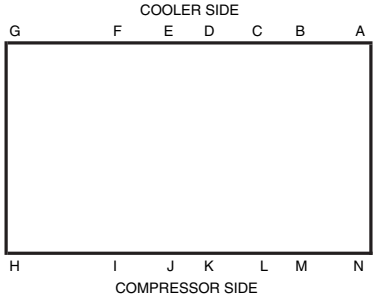

30XA140-162

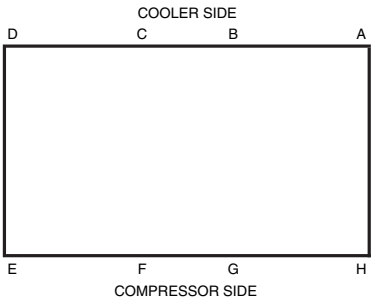

30XA400-500

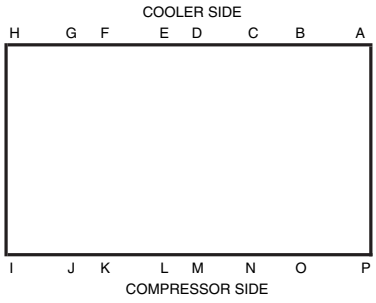

30XA180-202

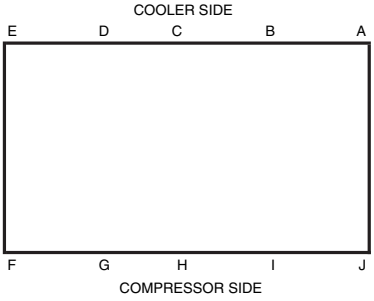

Physical data (cont)

UNIT MOUNTING WEIGHTS (cont)

SINGLE PUMP UNITS WITH Al/Cu CONDENSER COILS — ENGLISH

30XA UNIT SIZE	MOUNTING WEIGHT (lb) — Al/Cu*						
	A	B	C	D	E	F	Total
090	1273	2898	1160	972	2089	1271	9,662
092	1289	2935	1175	984	2116	1287	9,786
100	1299	2959	1196	997	2140	1297	9,889
102	1315	2996	1211	1009	2167	1313	10,013
110	1312	3002	1219	1019	2175	1303	10,029
112	1343	3073	1248	1043	2226	1334	10,266
120	1346	3041	1221	1021	2208	1337	10,174
122	1374	3104	1246	1042	2254	1365	10,384

30XA UNIT SIZE	MOUNTING WEIGHT (lb) — Al/Cu*								
	A	B	C	D	E	F	G	H	Total
140	2007	1554	1683	1679	1152	883	1695	1809	12,463
142	2081	1611	1745	1740	1194	915	1757	1875	12,920
160	2061	1581	1701	1710	1178	898	1715	1862	12,706
162	2130	1634	1758	1767	1218	928	1773	1924	13,132

SINGLE PUMP UNITS WITH Al/Cu CONDENSER COILS — SI

30XA UNIT SIZE	MOUNTING WEIGHT (kg) — Al/Cu*						
	A	B	C	D	E	F	Total
090	578	1314	526	441	947	576	4383
092	585	1331	533	447	960	584	4439
100	589	1342	543	452	971	588	4485
102	597	1359	549	458	983	596	4542
110	595	1362	553	462	986	591	4549
112	609	1394	566	473	1010	605	4657
120	611	1379	554	463	1001	607	4615
122	623	1408	565	473	1022	619	4710

30XA UNIT SIZE	MOUNTING WEIGHT (kg) — Al/Cu*								
	A	B	C	D	E	F	G	H	Total
140	910	705	763	762	523	401	769	821	5653
142	944	731	791	789	542	415	797	851	5860
160	935	717	771	776	534	408	778	845	5763
162	966	741	797	802	552	421	804	873	5957

*Condenser Coil: Aluminum Fins/Copper Tubing.

30XA090-122

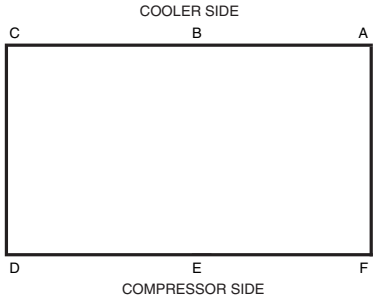

30XA140-162

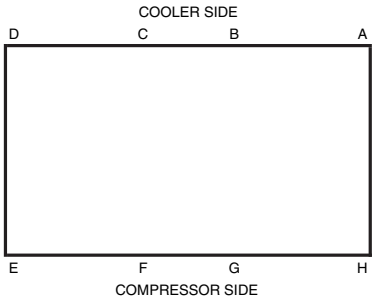

UNIT MOUNTING WEIGHTS (cont)

DUAL PUMP UNITS WITH Al/Cu CONDENSER COILS — ENGLISH

30XA UNIT SIZE	MOUNTING WEIGHT (lb) — Al/Cu*						
	A	B	C	D	E	F	Total
090	1273	3106	1248	972	2089	1271	9,959
092	1289	3145	1264	984	2115	1287	10,083
100	1299	3168	1285	997	2140	1297	10,186
102	1315	3206	1301	1009	2166	1313	10,310
110	1312	3211	1307	1019	2175	1303	10,326
112	1342	3285	1337	1042	2225	1333	10,563
120	1346	3249	1310	1021	2208	1337	10,471
122	1373	3314	1336	1041	2252	1364	10,681

30XA UNIT SIZE	MOUNTING WEIGHT (lb) — Al/Cu*								
	A	B	C	D	E	F	G	H	Total
140	2007	1554	1891	1768	1152	883	1695	1809	12,760
142	2079	1610	1959	1831	1193	915	1756	1874	13,217
160	2061	1581	1909	1799	1178	898	1715	1862	13,003
162	2129	1633	1972	1858	1217	927	1771	1923	13,429

DUAL PUMP UNITS WITH Al/Cu CONDENSER COILS — SI

30XA UNIT SIZE	MOUNTING WEIGHT (kg) — Al/Cu*						
	A	B	C	D	E	F	Total
090	578	1409	566	441	947	576	4517
092	585	1426	573	446	959	584	4573
100	589	1437	583	452	971	588	4620
102	596	1454	590	458	982	595	4676
110	595	1456	593	462	986	591	4684
112	609	1490	606	473	1009	605	4791
120	611	1474	594	463	1001	607	4750
122	623	1503	606	472	1022	619	4845

30XA UNIT SIZE	MOUNTING WEIGHT (kg) — Al/Cu*								
	A	B	C	D	E	F	G	H	Total
140	910	705	858	802	523	401	769	821	5788
142	943	730	888	831	541	415	796	850	5995
160	935	717	866	816	534	408	778	845	5898
162	965	741	894	843	552	421	803	872	6091

*Condenser Coil: Aluminum Fins/Copper Tubing.

30XA090-122

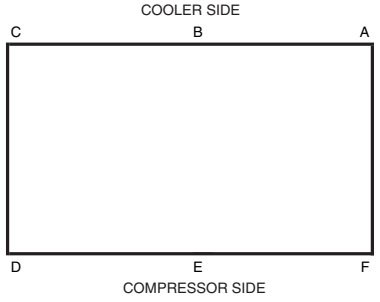

30XA140-162

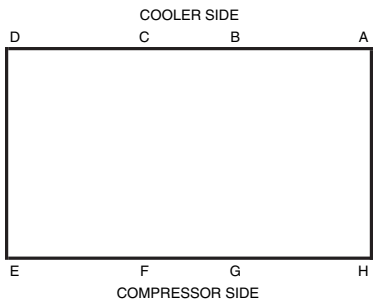

Physical data (cont)

UNIT MOUNTING WEIGHTS (cont)

UNITS WITHOUT PUMPS AND WITH Cu/Cu CONDENSER COILS — ENGLISH

30XA UNIT SIZE	MOUNTING WEIGHT (lb) — Cu/Cu†				
	A	B	C	D	Total
080	2244	1970	1956	2228	8398
082	2286	2007	1993	2270	8555

30XA UNIT SIZE	MOUNTING WEIGHT (lb) — Cu/Cu†						
	A	B	C	D	E	F	Total
090	1394	2429	943	1144	2368	1392	9,669
092	1412	2460	955	1159	2398	1410	9,793
100	1420	2485	974	1174	2425	1418	9,896
102	1438	2516	986	1189	2455	1436	10,020
110	1433	2525	993	1200	2463	1424	10,036
112	1467	2585	1016	1228	2521	1458	10,273
120	1467	2563	995	1202	2496	1458	10,181
122	1497	2616	1016	1227	2547	1488	10,391

30XA UNIT SIZE	MOUNTING WEIGHT (lb) — Cu/Cu†								
	A	B	C	D	E	F	G	H	Total
140	2188	1735	1058	1375	1411	1078	1876	1990	12,711
142	2267	1797	1096	1424	1462	1117	1943	2061	13,168
160	2242	1762	1074	1401	1442	1095	1896	2043	12,954
162	2316	1820	1109	1447	1489	1131	1958	2110	13,380

30XA UNIT SIZE	MOUNTING WEIGHT (lb) — Cu/Cu†										
	A	B	C	D	E	F	G	H	I	J	Total
180	1099	1679	1359	2239	1382	1419	2258	1035	1483	1083	15037
182	1124	1717	1390	2290	1414	1452	2310	1059	1517	1108	15,382
200	1105	1695	1384	2261	1388	1428	2271	1044	1495	1089	15159
202	1127	1729	1412	2306	1416	1456	2316	1065	1525	1111	15,461

30XA UNIT SIZE	MOUNTING WEIGHT (lb) — Cu/Cu†												
	A	B	C	D	E	F	G	H	I	J	K	L	Total
220	995	1378	1865	1771	1010	1398	1441	1030	1636	1337	1419	1014	16,295
240	1012	1400	1891	1794	1013	1401	1443	1033	1645	1347	1443	1032	16,455
260	679	1798	1814	947	2833	1197	1712	2748	984	1517	1754	679	18,662
280	682	1820	1847	956	2866	1200	1715	2759	988	1542	1775	682	18,831
300	699	1858	1883	983	2962	1224	1754	2848	1008	1564	1811	699	19,292

30XA UNIT SIZE	MOUNTING WEIGHT (lb) — Cu/Cu†														
	A	B	C	D	E	F	G	H	I	J	K	L	M	N	Total
325	1037	1037	1175	1728	980	2939	1263	1760	2727	1001	1842	1443	1037	1037	21,005
350	1041	1041	1180	1743	990	2993	1274	1786	2780	1006	1848	1447	1041	1041	21,211

30XA UNIT SIZE	MOUNTING WEIGHT (lb) —Cu/Cu†																
	A	B	C	D	E	F	G	H	I	J	K	L	M	N	O	P	Total
400	1045	1432	1708	3361	1453	987	2609	1269	1764	2681	945	1462	2547	1189	1474	1065	26,990
450	1054	1377	2457	2579	1103	1255	2426	2449	3107	2330	1749	1464	1738	1682	1413	1073	29,254
500	1041	1434	2506	2633	1108	1259	2435	2458	3116	2340	1754	1468	1756	1700	1477	1061	29,547

†Condenser Coil: Copper Fins/Copper Tubing.

UNIT MOUNTING WEIGHTS (cont)

UNITS WITHOUT PUMPS AND WITH Cu/Cu CONDENSER COILS — SI

30XA UNIT SIZE	MOUNTING WEIGHT (kg) — Cu/Cu†				
	A	B	C	D	Total
080	1018	893	887	1011	3809
082	1037	910	904	1030	3881

30XA UNIT SIZE	MOUNTING WEIGHT (kg) — Cu/Cu†						
	A	B	C	D	E	F	Total
090	632	1102	428	519	1074	631	4386
092	640	1116	433	526	1088	639	4442
100	644	1127	442	533	1100	643	4489
102	652	1141	447	539	1114	651	4545
110	650	1145	450	544	1117	646	4552
112	665	1172	461	557	1144	661	4660
120	665	1163	451	545	1132	661	4618
122	679	1187	461	556	1156	675	4713

30XA UNIT SIZE	MOUNTING WEIGHT (kg) — Cu/Cu†								
	A	B	C	D	E	F	G	H	Total
140	992	787	480	624	640	489	851	903	5766
142	1028	815	497	646	663	507	881	935	5973
160	1017	799	487	636	654	497	860	927	5876
162	1050	826	503	656	676	513	888	957	6069

30XA UNIT SIZE	MOUNTING WEIGHT (kg) — Cu/Cu†										
	A	B	C	D	E	F	G	H	I	J	Total
180	499	762	617	1016	627	644	1024	470	673	491	6821
182	510	779	631	1039	641	658	1048	480	688	503	6977
200	501	769	628	1026	630	648	1030	474	678	494	6876
202	511	784	640	1046	642	661	1051	483	692	504	7013

30XA UNIT SIZE	MOUNTING WEIGHT (kg) — Cu/Cu†												
	A	B	C	D	E	F	G	H	I	J	K	L	Total
220	451	625	846	804	458	634	653	467	742	607	644	460	7391
240	459	635	858	814	460	635	655	469	746	611	654	468	7464
260	308	816	823	429	1285	543	777	1246	446	688	796	308	8465
280	309	826	838	434	1300	544	778	1252	448	700	805	309	8542
300	317	843	854	446	1343	555	796	1292	457	710	821	317	8751

30XA UNIT SIZE	MOUNTING WEIGHT (kg) — Cu/Cu†														
	A	B	C	D	E	F	G	H	I	J	K	L	M	N	Total
325	470	470	533	784	445	1333	573	798	1237	454	836	655	470	470	9528
350	472	472	535	791	449	1358	578	810	1261	456	838	656	472	472	9621

30XA UNIT SIZE	MOUNTING WEIGHT (kg) — Cu/Cu†																
	A	B	C	D	E	F	G	H	I	J	K	L	M	N	O	P	Total
400	474	649	775	1524	659	447	1183	576	800	1216	428	663	1155	539	669	483	12 243
450	478	624	1114	1170	500	569	1100	1111	1409	1057	793	664	788	763	641	487	13 269
500	472	651	1137	1194	502	571	1105	1115	1413	1061	796	666	797	771	670	481	13 402

†Condenser Coil: Copper Fins/Copper Tubing.

Physical data (cont)

UNIT MOUNTING WEIGHTS (cont)
UNITS WITHOUT PUMPS AND WITH Cu/Cu CONDENSER COILS

30XA080,082

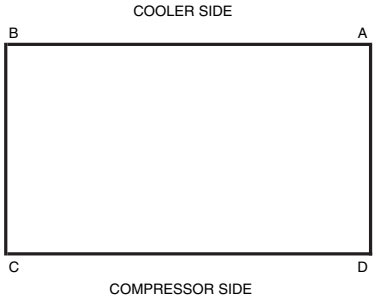

30XA220-300

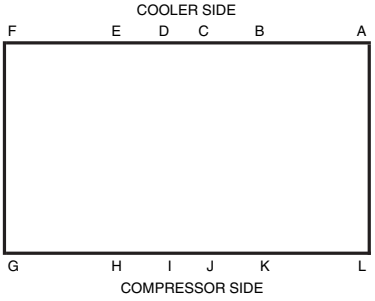

30XA090-122

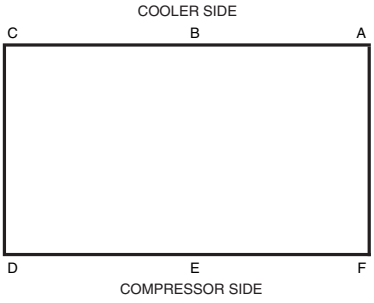

30XA325,350

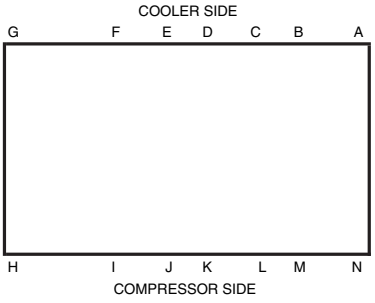

30XA140-162

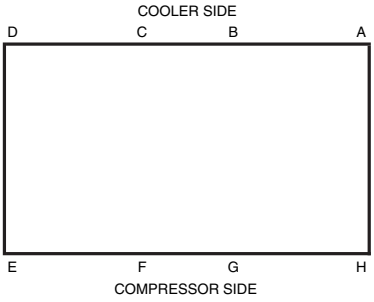

30XA400-500

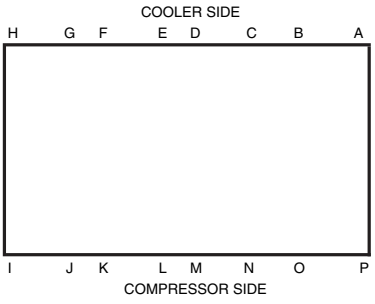

30XA180-202

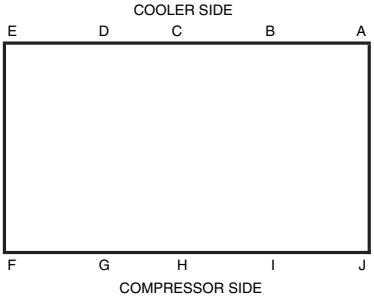

UNIT MOUNTING WEIGHTS (cont)

SINGLE PUMP UNITS WITH Cu/Cu CONDENSER COILS — ENGLISH

30XA UNIT SIZE	MOUNTING WEIGHT (lb) — Cu/Cu†						
	A	B	C	D	E	F	Total
090	1394	3139	1280	1093	2330	1392	10,627
092	1410	3176	1295	1106	2357	1408	10,751
100	1420	3201	1317	1117	2382	1418	10,854
102	1436	3237	1332	1130	2409	1434	10,978
110	1433	3244	1339	1139	2416	1424	10,994
112	1464	3314	1368	1164	2468	1455	11,231
120	1467	3282	1342	1142	2449	1458	11,139
122	1495	3344	1367	1164	2495	1485	11,349

30XA UNIT SIZE	MOUNTING WEIGHT (lb) — Cu/Cu†								
	A	B	C	D	E	F	G	H	Total
140	2188	1735	1804	1800	1273	1004	1876	1990	13,669
142	2261	1793	1864	1860	1316	1038	1939	2056	14,126
160	2242	1762	1821	1831	1299	1019	1896	2043	13,912
162	2311	1816	1877	1887	1339	1050	1954	2106	14,338

SINGLE PUMP UNITS WITH Cu/Cu CONDENSER COILS — SI

30XA UNIT SIZE	MOUNTING WEIGHT (kg) — Cu/Cu†						
	A	B	C	D	E	F	Total
090	632	1424	581	496	1057	631	4820
092	640	1440	587	502	1069	639	4876
100	644	1452	597	507	1080	643	4923
102	651	1468	604	512	1093	651	4979
110	650	1471	607	517	1096	646	4987
112	664	1503	620	528	1120	660	5094
120	665	1489	609	518	1111	661	5053
122	678	1517	620	528	1132	674	5148

30XA UNIT SIZE	MOUNTING WEIGHT (kg) — Cu/Cu†								
	A	B	C	D	E	F	G	H	Total
140	992	787	818	816	577	455	851	903	6200
142	1026	813	846	844	597	471	879	933	6407
160	1017	799	826	830	589	462	860	927	6310
162	1048	824	851	856	607	476	886	955	6504

†Condenser Coil: Copper Fins/Copper Tubing.

30XA090-122

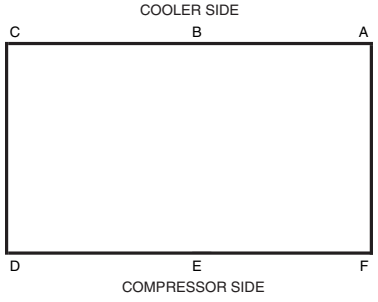

30XA140-162

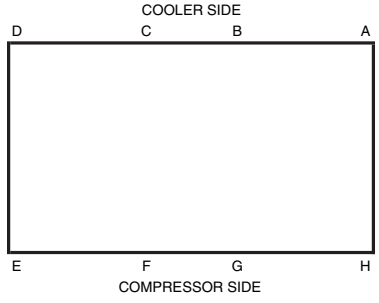

Physical data (cont)

UNIT MOUNTING WEIGHTS (cont)

DUAL PUMP UNITS WITH Cu/Cu CONDENSER COILS — ENGLISH

30XA UNIT SIZE	MOUNTING WEIGHT (lb) — Cu/Cu†						
	A	B	C	D	E	F	Total
090	1394	3347	1369	1093	2330	1392	10,924
092	1410	3385	1385	1105	2356	1408	11,048
100	1420	3409	1406	1117	2382	1418	11,151
102	1436	3447	1422	1129	2408	1434	11,275
110	1433	3452	1428	1139	2416	1424	11,291
112	1463	3525	1458	1163	2467	1454	11,528
120	1467	3491	1430	1142	2449	1458	11,436
122	1494	3555	1456	1163	2494	1485	11,646

30XA UNIT SIZE	MOUNTING WEIGHT (lb) — Cu/Cu†								
	A	B	C	D	E	F	G	H	Total
140	2188	1735	2012	1889	1273	1004	1876	1990	13,966
142	2260	1792	2078	1951	1315	1037	1937	2055	14,423
160	2242	1762	2029	1919	1299	1019	1896	2043	14,209
162	2309	1815	2090	1977	1338	1050	1953	2104	14,635

DUAL PUMP UNITS WITH Cu/Cu CONDENSER COILS — SI

30XA UNIT SIZE	MOUNTING WEIGHT (kg) — Cu/Cu†						
	A	B	C	D	E	F	Total
090	632	1518	621	496	1057	631	4955
092	639	1535	628	501	1069	639	5011
100	644	1546	638	507	1080	643	5058
102	651	1563	645	512	1092	650	5114
110	650	1566	648	517	1096	646	5122
112	664	1599	661	527	1119	659	5229
120	665	1583	649	518	1111	661	5187
122	678	1613	661	528	1131	673	5283

30XA UNIT SIZE	MOUNTING WEIGHT (kg) — Cu/Cu†								
	A	B	C	D	E	F	G	H	Total
140	992	787	913	857	577	455	851	903	6335
142	1025	813	942	885	596	470	879	932	6542
160	1017	799	921	871	589	462	860	927	6445
162	1047	823	948	897	607	476	886	954	6638

†Condenser Coil: Copper Fins/Copper Tubing.

30XA090-122

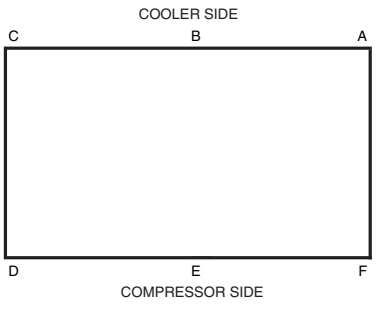

30XA140-162

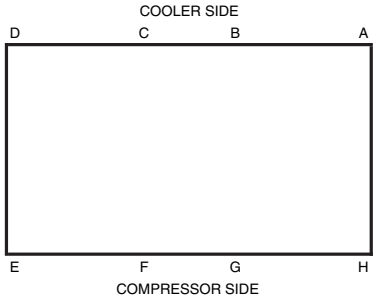

Options and accessories

ITEM	FACTORY-INSTALLED OPTION	FIELD-INSTALLED ACCESSORY
Condenser Coil and Fan Options		
MCHX, E-Coat	X	
Aluminum Fins/Copper Tube	X	
Aluminum Fins/Copper Tube, Pre-Coated	X	
Aluminum Fins/Copper Tube, E-Coat	X	
Copper Fins/Copper Tube, E-Coat	X	
Copper Fins/Copper Tube Condenser Coils	X	
Compressor Sound Reduction Enclosures	X	
High Ambient Temperature Option (140-500 only)	X	
Controls/Communication Options		
BACnet Communications	X	
BACnet Translator Control	X	X
Chillervisor System Manager III Multi-Unit Control		X
Energy Management Module	X	X
LON Translator Control	X	X
Navigator™ Module	X	X
Remote Enhanced Display		X
Service Option	X	
Remote Service Port		X
Touch Pilot™ Display	X	X
External Pump Control		X
Dual Chiller Accessory Kit		X
Cooler Options		
Medium Temperature Brine (080-350 only)	X	
Minus One Pass Cooler	X	
Plus One Pass Cooler	X	
Remote Cooler		X
DX Cooler	X	
Electrical Options		
Unit-Mounted Main Disconnect, Non-Fused	X	
Control Transformer	X	
Convenience Outlet		X
Hydronic Pump Package (with or without VFD)	X	
Refrigeration Circuit Options		
Wye-Delta Compressor Start	X	
Low Ambient Temperature Head Pressure Control	X	X
Minimum Load Control	X	X
Isolation Valve Option	X	
Suction Line Insulation	X	
Security/Packaging Option		
Security Grilles	X	X
Upper Hail Guard	X	
Full End Screen	X	
Full Hail Guard		X
Condenser Coil Trim Panels	X	X

LEGEND

LON — Local Operating Network

Factory-installed options

Condenser coil options are available to match coil construction to the site conditions for the best durability. Refer to the Condenser Coil Corrosion Protection Options table on page 28 or the appropriate selection guide for more information.

High ambient temperature option provides high-speed condenser fan motors to increase the condenser airflow. This option may allow for an increase in machine capacity, and may also result the selection of a smaller chassis to meet given capacity requirements. The high ambient temperature option is not available on 30XA080-122 units. This option is required for 30XA400-500 units which are either operating in multi-chiller configurations or have ambient temperatures at or above 100 F (37.8 C).

Minus-one-pass cooler provides a lower pressure drop through the cooler for applications with low delta T (temperature) or high flow or where the coolers are piped in a series arrangement. Applies to flooded coolers only.

Plus-one-pass cooler provides a greater efficiency for brine applications and in applications with a high delta T and low flow. Applies to flooded coolers only.

Wye-delta start is an alternate starting method which reduces the in-rush current when starting the compressor.

Energy management module provides energy management capabilities to minimize chiller energy consumption. Several features are provided with this module including leaving fluid temperature reset, cooling set point or demand limit control from a 4 to 20 mA signal, space temperature reset (requires field-installed space temperature

Options and accessories (cont)

sensor), 2-step demand limit control (from 0 to 100%) activated by a remote contact closure, and discrete input for "Ice Done" indication for ice storage system interface.

Service option provides a remote service port for Navigator™ display connection (sizes 080-122, not required on other sizes) and a factory-installed convenience outlet that includes 4-amp GFI (ground fault interrupt) receptacle. Convenience outlet is 115-v female receptacle. Service option not available with 380-v units, and is also available as a field-installed accessory.

Direct expansion (DX) cooler option provides a shell and tube, direct expansion cooler as an alternative to the standard flooded cooler. The DX cooler is especially beneficial in low temperature applications and/or applications employing high glycol concentrations.

Low ambient temperature head pressure control permits operation of the 30XA units to –20 F (–29 C) outdoor ambient temperature. The control is also available as a field-installed accessory and may require field-installed wind baffles.

Minimum load control allows additional capacity reduction for unit operation below the minimum step of unloading via hot gas bypass. Minimum load control is also available as a field-installed accessory.

Isolation valve option provides additional refrigerant isolation capability. On units equipped with the standard, flooded cooler, a liquid line service valve and a discharge isolation valve are always provided per refrigerant circuit. On units equipped with the optional DX cooler, only the liquid line service valve is provided. Regardless of which cooler option is employed, the selection of the isolation valve option results in chillers which are equipped with a liquid line service valve, a discharge service valve, and a series of valves on or near the cooler, the net effect of which is to provide isolation capability in the condenser area, the cooler area and the compressor area. The selection of this option is the only means of acquiring isolation of the compressor from the cooler vessel, and this may be beneficial for servicing the chiller.

Medium temperature brine option allows for leaving fluid temperatures to be set below 30 F (–1.1 C) with the standard flooded cooler. The lowest allowable leaving fluid temperature with a flooded cooler is a function of brine type. Further when this option is employed using flooded coolers, machine parameters and operating conditions are a function of chiller size as well as brine type. Low ambient temperature head pressure control and suction line insulation are required when the medium temperature brine option is installed regardless of cooler type. This option is available on sizes 080-350 only.

The following chart shows the parameters associated with medium temperature brine applications with flooded coolers. Units with DX coolers can operate to 15 F (-9.4 C) without these restrictions.

FLOODED COOLER LOW LCWT RESTRICTIONS

PARAMETER	30XA SIZES	BRINE TYPE	
		EG	PG
Cooler Passes	080-350	3 (or +1)	3 (or +1)
Minimum Leaving Fluid Temperature	080-350	21.2 F	26.6 F
Maximum Glycol	080-350	35%	33%
Allowable Cooler Delta Temperature*	080-090	2.0 to 7.2 delta F	2.0 to 5.4 delta F
	100-350	2.0 to 7.2 delta F	2.0 to 7.2 delta F

LEGEND
EG — Ethylene Glycol
PG — Propylene Glycol
* Leaving fluid temperature less than 32 F (0° C).

Unit-mounted non-fused disconnect option provides non-fused disconnect for unit power located at the unit.

Suction line insulation is tubular closed-cell insulation. This option is required with the medium temperature brine option and recommended for areas of high dewpoints where condensation may be a concern.

BACnet communication option — Provides factory-installed communication capability with a BACnet MS/TP network. Allows integration with i-Vu® Open control system or a BACnet building automation system.

BACnet translator control provides an interface between the chiller and a BACnet Local Area Network (LAN, i.e., MS/TP EIA-485). The BACnet translator control is also available as a field-installed accessory. Field programming is required.

LON translator control provides an interface between the chiller and a Local Operating Network (LON, i.e., LonWorks* FT-10A ANSI/EIA-709.1). The LON translator control is also available as a field-installed accessory. Field programming is required.

Condenser coil trim panels provide an aesthetic, finished appearance for the condenser coil ends of the compressor side of the unit. Condenser coil trim panels are also available as a field-installed accessory.

Control transformer is sized to supply the needs of the control circuit from the main power supply.

Hydronic pump package adds circulating pumps, a combination valve (isolation, modulation and check), strainer, victaulic piping connections, insulation and heaters and pressure temperature taps (3). The pumps are available in single or dual (lead/lag controlled), cooler pump versions with total dynamic head external to the chiller from approximately 20 to 140 ft (6.1 to 42.7 m). This package is available with or without a VFD. The hydronic pump package is only available for unit sizes 30XA090-162.

Security grilles are coated grilles that protect the condenser, cooler and compressors. These are also available as an accessory.

Upper hail guard consists of louvered panels on the ends of the machine, which firmly fasten to the machine frame

*Registered trademark of the Echelon Corporation.

and provide coverage from the top of the unit to the bottom of the coil. A hinged accessory hail guard is also available. The accessory covers the entire unit end (both ends), and, with its hinged design, is not identical to this option.

Full end screen consists of louvered panels on the ends of the machine, providing complete coverage from the top to the bottom of the unit. This option functions as both a privacy screen and a hail guard. For hail protection, an accessory hail guard is also available. The accessory covers the entire unit end (both ends), and, with its hinged design, is not identical to this option.

Compressor enclosures provide sound reduction for the screw compressors.

Navigator™ module provides a portable, hand-held display for convenient access to unit status, operation, configuration and troubleshooting diagnostics capability.

Touch Pilot™ display provides a touch screen user interface. This fixed screen display can be used to commission, monitor and control Carrier Comfort Network® devices. It provides access to configuration, maintenance, service, set point, time schedule, alarm history and status data.

Field-installed accessories

Touch Pilot display used as an accessory is a cost-effective, touch-screen, remote mount device that can be used in lieu of the remote enhanced display.

Remote enhanced display is a remotely mounted indoor 40-character per line, 16-line display panel for unit monitoring and diagnostics.

Remote cooler kit allows for remote installation of the cooler. Never bury refrigerant lines when using this accessory or in any other application.

Chillervisor System Manager III multi-unit control allows sequencing of between two and eight chillers in parallel.

Low ambient temperature head pressure control permits operation of the 30XA units to –20 F (–29 C) outdoor ambient temperature. The control is also available as a factory-installed option and may require field-installed wind baffles.

Energy management module provides energy management capabilities to minimize chiller energy consumption. Several features are provided with this module including leaving fluid temperature reset, cooling set point, space temperature reset (requires field-installed space temperature sensor) or demand limit control from a 4 to 20 mA signal, 2-step demand limit control (from 0 to 100%) activated by a remote contact closure (one-step demand limit does not require the energy management module), and discrete input for "Ice Done" indication for ice storage system interface.

Remote service port consists of a receptacle for Navigator device connection. The port is housed in a waterproof enclosure conveniently located for easy access to information during operation and maintenance routines.

Navigator™ module is required when there is a need for a portable hand-held display, and the main display is a Touch Pilot™ display.

Convenience outlet includes 4-amp GFI (ground fault interrupt) receptacle. Convenience outlet is 115-v female receptacle. Not available with 380-v units.

BACnet translator control provides an interface between the chiller and a BACnet Local Area Network (LAN, i.e., MS/TP EIA-485). The BACnet translator control is also available as a factory-installed option. Field programming is required.

LON translator control provides an interface between the chiller and a Local Operating Network (LON, i.e., LonWorks FT-10A ANSI/EIA-709.1). The LON translator control is also available as a factory-installed option. Field programming is required.

Condenser coil trim panels provide an aesthetic, finished appearance for the condenser coil ends of the compressor side of the unit. Condenser coil trim panels are also available as a factory-installed option.

Full hail guard consists of hinged, louvered panels, which cover both ends of the unit. This accessory provides complete protection from hail and flying debris. For hail protection, two factory options are also available. These options directly fasten to the end of the chillers (are not hinged), and therefore are not identical to this accessory.

Minimum load control allows additional capacity reduction for unit operation below the minimum step of unloading via hot gas bypass. Minimum load control is also available as a factory-installed option.

External pump control allows the chiller to control dual, external pumps. This accessory is not required for single, external pumps or factory-installed pumps.

Security grilles are coated grilles that protect the condenser, cooler, and compressors. These are also available as a factory-installed option.

Dual chiller accessory kit provides the additional hardware (thermistors, wells, connectors) required for applications with 2 chillers running in parallel.

Options and accessories (cont)

CONDENSER COIL CORROSION PROTECTION OPTIONS

ENVIRO-SHIELD™ OPTION*	ENVIRONMENT				
	Standard	Mild Coastal	Severe Coastal	Industrial	Combined Industrial/Coastal
Novation® Heat Exchanger (Standard)	See NACO Packaged Chiller Builder				
AL Fins	X				
CU Fins		X			
AL Fins, E-coat			X	X	X
CU Fins, E-coat			X		
AL Fins, Precoated		X			

LEGEND

AL — Aluminum
CU — Copper
NACO — North American Commercial Operations

* See NACO Packaged Chiller Builder for details. Additional corrosion protection is available. For Novation heat exchangers, see selection guide "Environmental Corrosion Protection, Novation Heat Exchanger with Microchannel Technology" (Publication 04-581042-01). For RTPF heat exchangers, see selection guide "Environmental Corrosion Protection, Heat Exchangers with Round Tube/Plate Fin (RTPF) Coils" (Publication 04-581043-01).

Dimensions

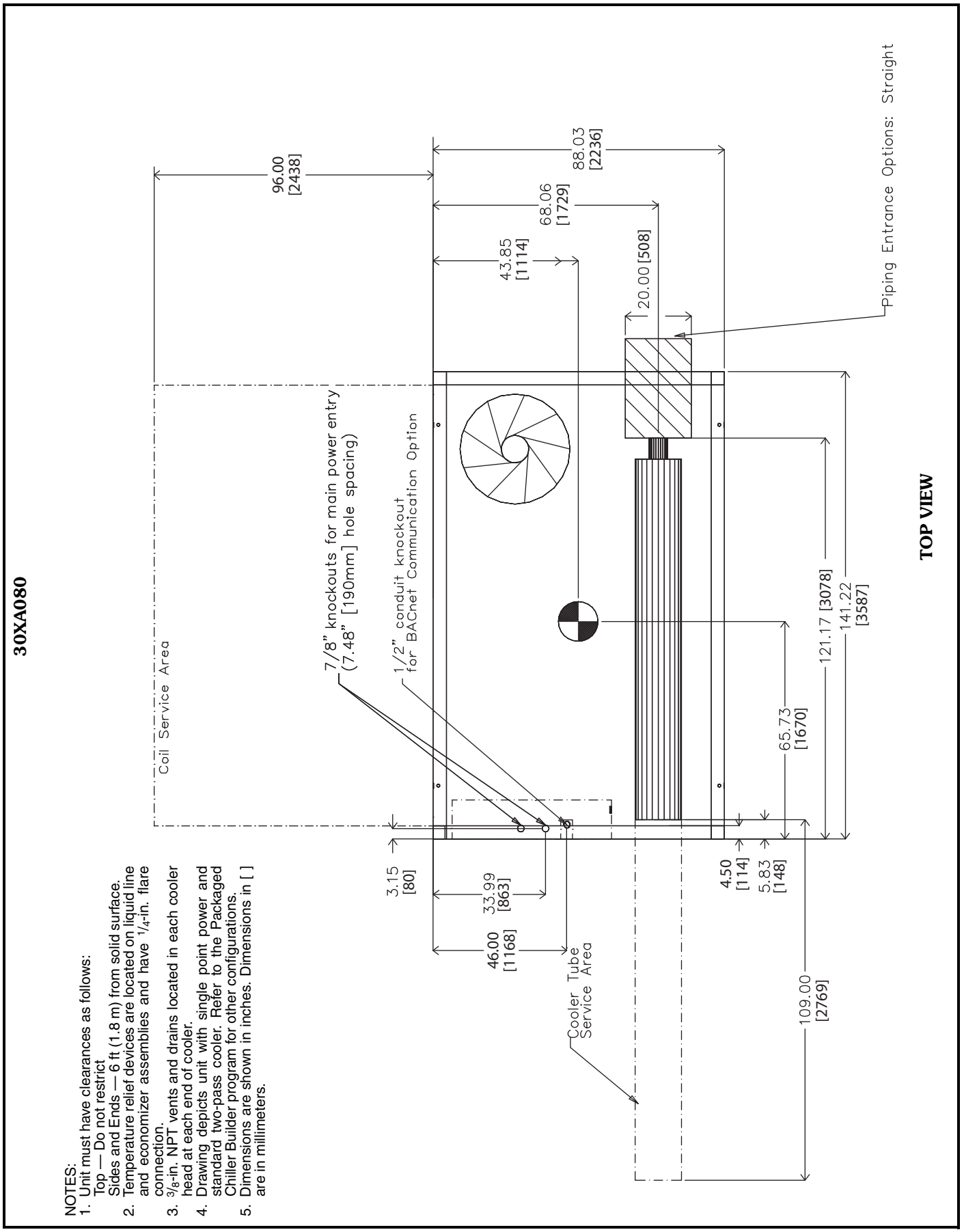
30XA080
NOTES:
1. Unit must have clearances as follows:
Top — Do not restrict
Sides and Ends — 6 ft (1.8 m) from solid surface.
2. Temperature relief devices are located on liquid line and economizer assemblies and have 1/4-in. flare connection.
3. 3/8-in. NPT vents and drains located in each cooler head at each end of cooler.
4. Drawing depicts unit with single point power and standard two-pass cooler. Refer to the Packaged Chiller Builder program for other configurations.
5. Dimensions are shown in inches. Dimensions in [ ] are in millimeters.
Coil Service Area
7/8" knockouts for main power entry (7.48" [190mm] hole spacing)
1/2" conduit knockout for BACnet Communication Option
Cooler Tube Service Area
Piping Entrance Options: Straight
96.00 [2438]
88.03 [2236]
68.06 [1729]
43.85 [1114]
20.00 [508]
121.17 [3078]
141.22 [3587]
65.73 [1670]
109.00 [2769]
46.00 [1168]
33.99 [863]
3.15 [80]
4.50 [114]
5.83 [148]
TOP VIEW

Dimensions (cont)

30XA080 (cont)

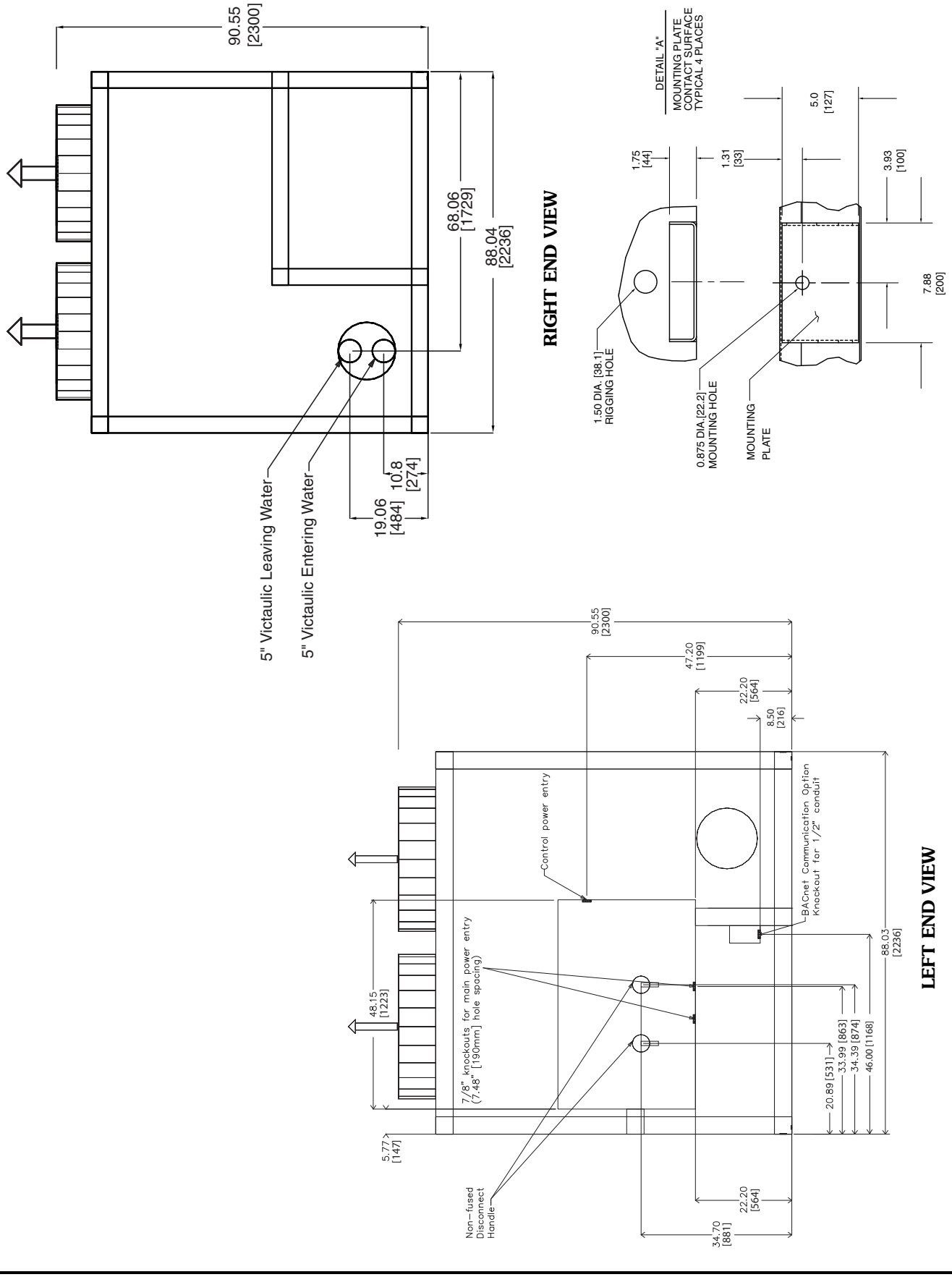

30XA080 (cont)

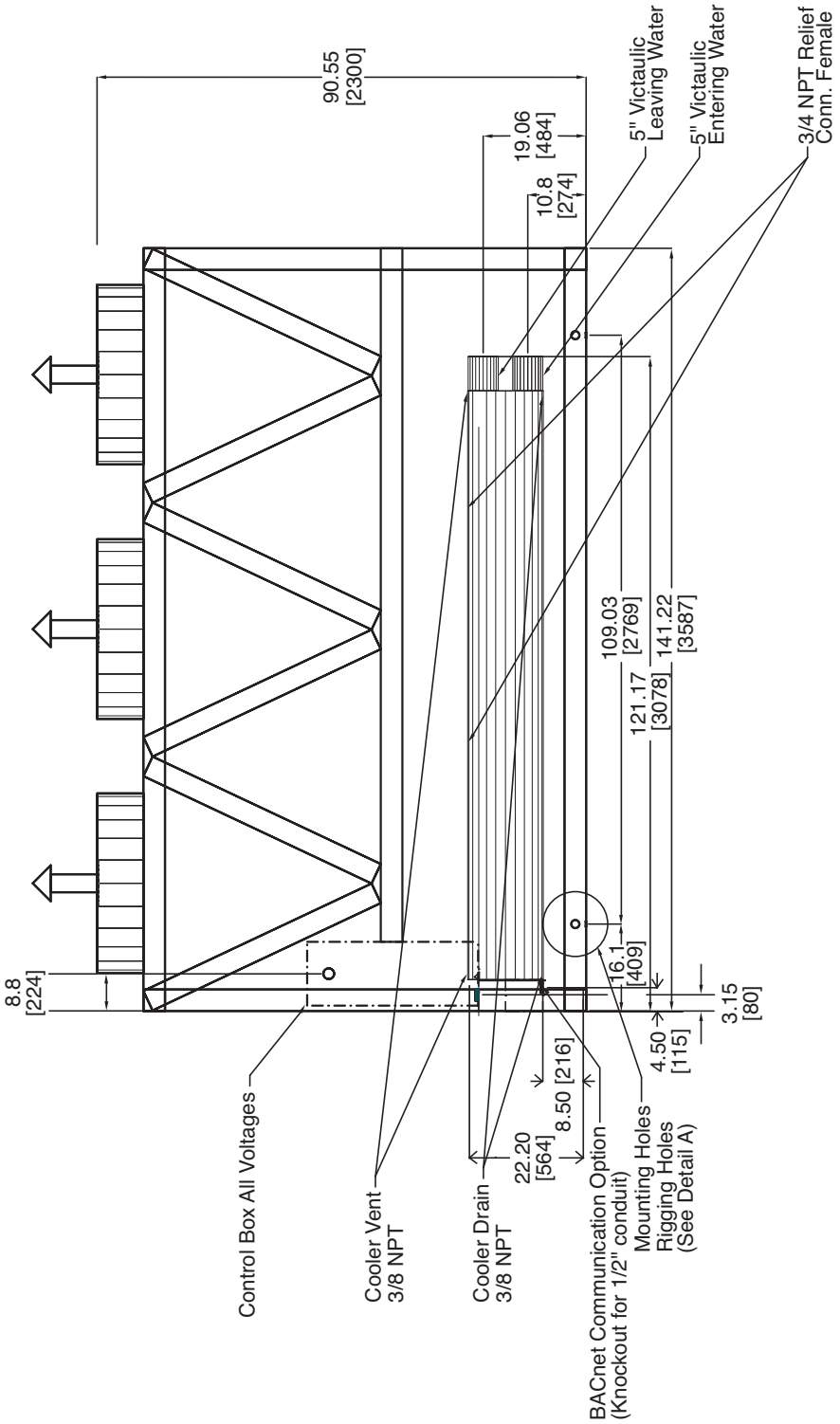

FRONT VIEW

Dimensions (cont)

30XA082 (DX COOLER)

NOTES:
1. Unit must have clearances as follows:
   Top — Do not restrict
   Sides and Ends — 6 ft (1.8 m) from solid surface
   Airflow Side — 8 ft (2.4 m) required for coil service area.
2. Temperature relief devices are located on liquid line and economizer assemblies and have 1/4-in. flare connection.
3. Dimensions are shown in inches. Dimensions in [ ] are in millimeters.

30XA UNIT	CGx	CGy
082	68.5 [1739.9]	35.3 [896.6]

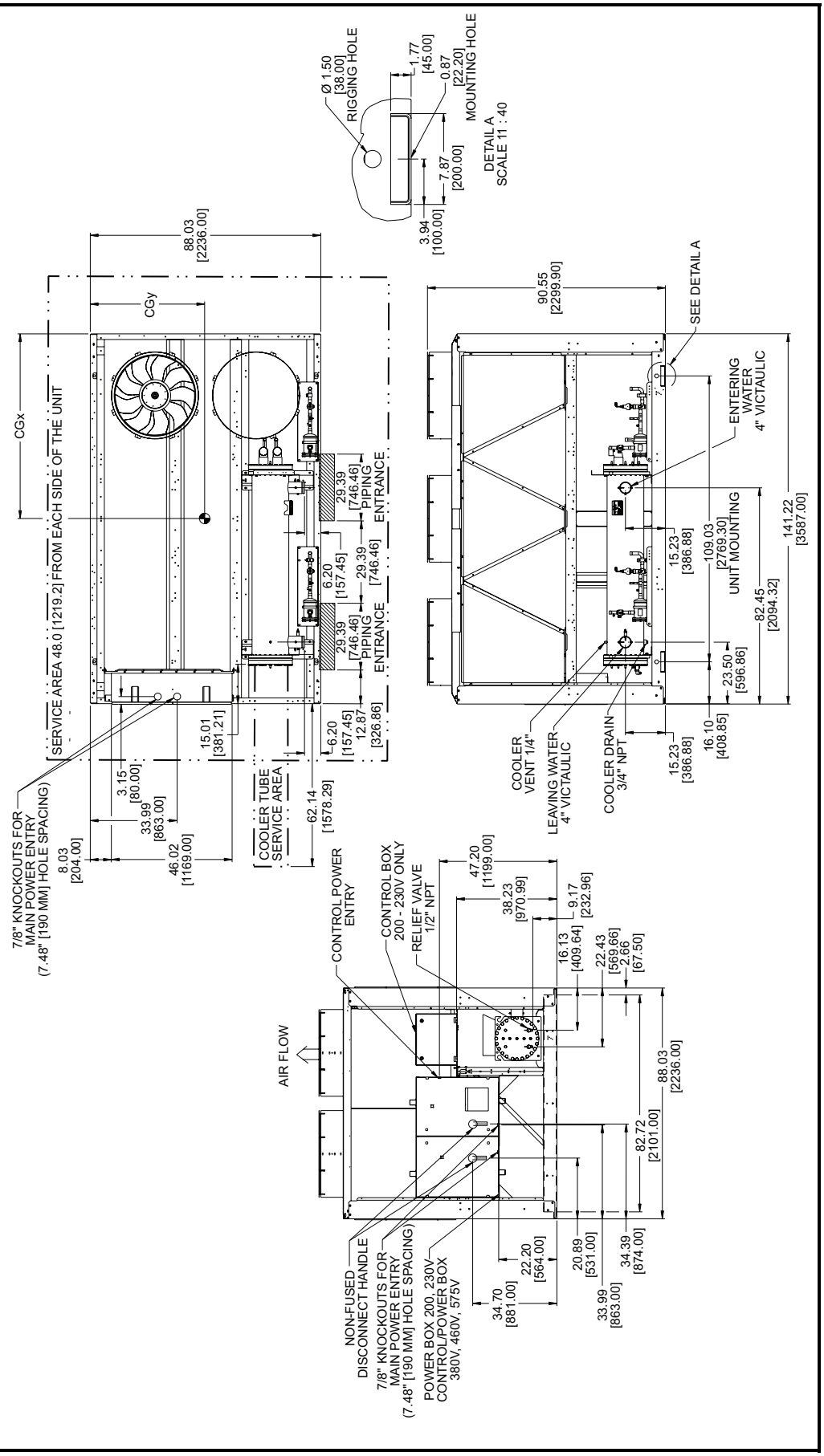

30XA090,100,110,120 WITHOUT PUMP

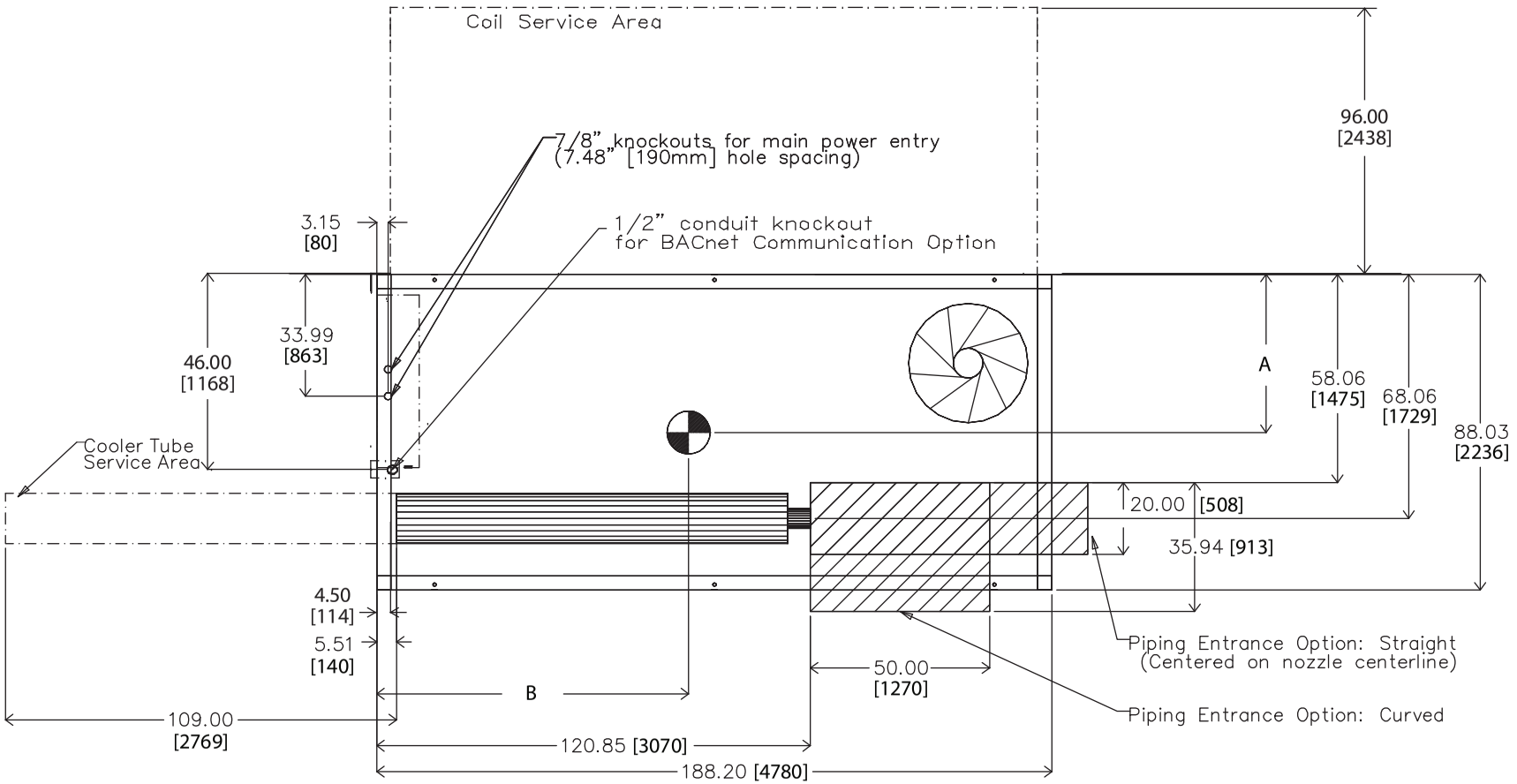

TOP VIEW

30XA UNIT	A	B
090	44.11 [1120]	86.93 [2208]
100	44.11 [1120]	87.22 [2215]
110	44.11 [1120]	87.62 [2226]
120	44.11 [1120]	87.12 [2213]

NOTES:
1. Unit must have clearances as follows:
   Top — Do not restrict
   Sides and Ends — 6 ft (1.8 m) from solid surface.
2. Temperature relief devices are located on liquid line and economizer assemblies and have 1/4-in. flare connection.
3. 3/8-in. NPT vents and drains located in each cooler head at each end of cooler.
4. Drawing depicts unit with single-point power and standard two-pass cooler. Refer to the Packaged Chiller Builder program for other configurations.
5. Dimensions are shown in inches. Dimensions in [ ] are in millimeters.

Dimensions (cont)

30XA090,100,110,120 WITHOUT PUMP (cont)

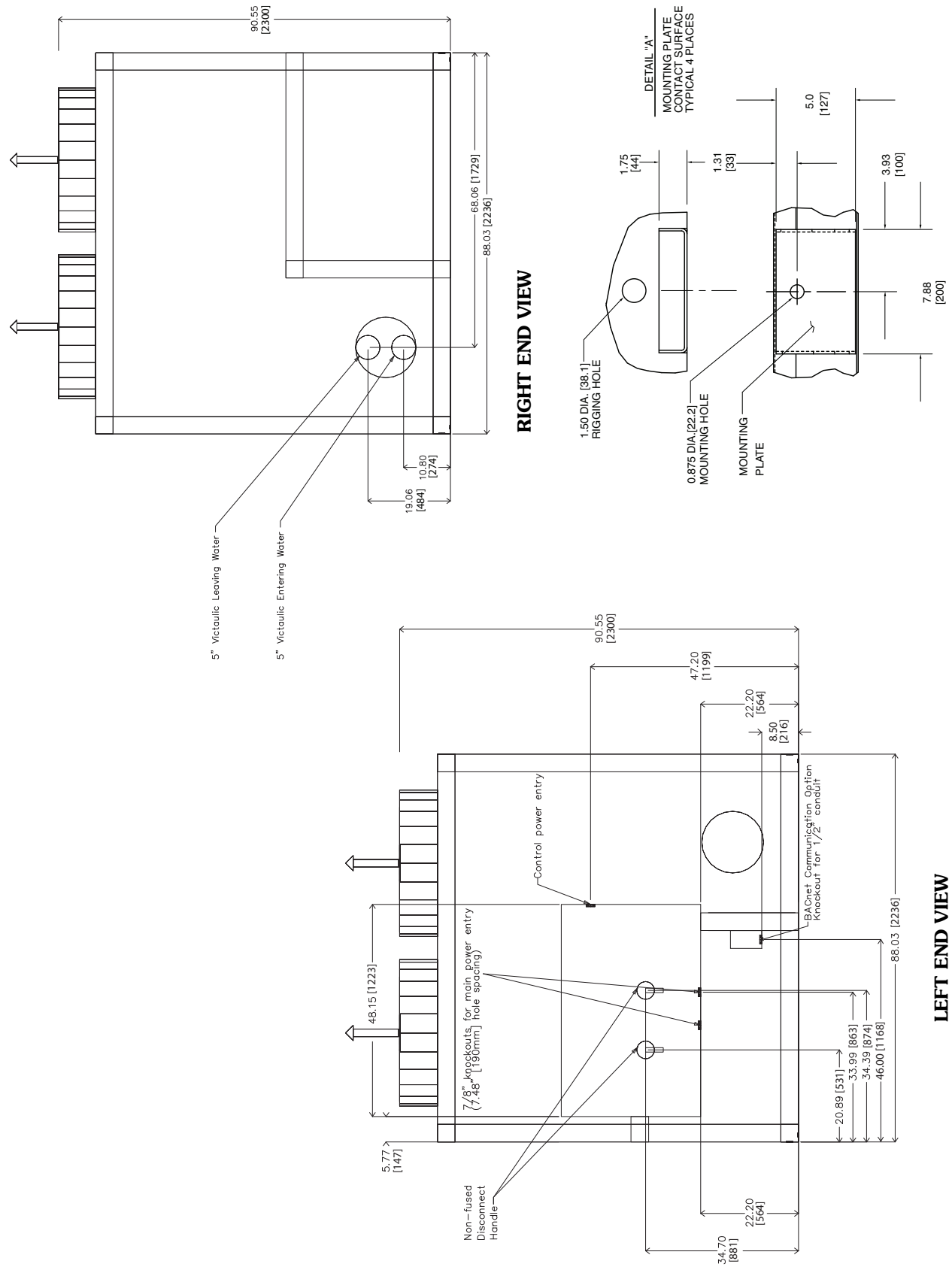

30XA090,100,110,120 WITHOUT PUMP (cont)

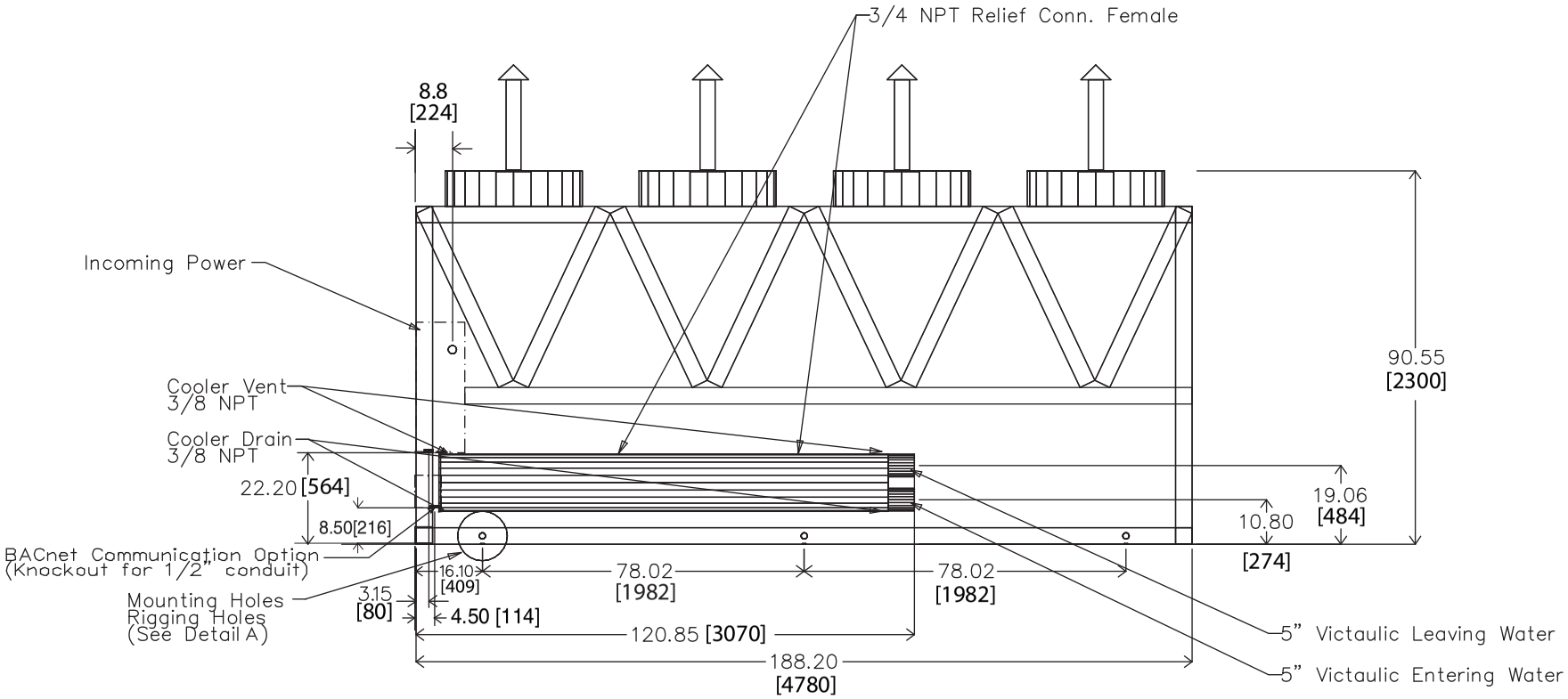

FRONT VIEW

Dimensions (cont)

30XA090,100,110,120 WITH PUMP

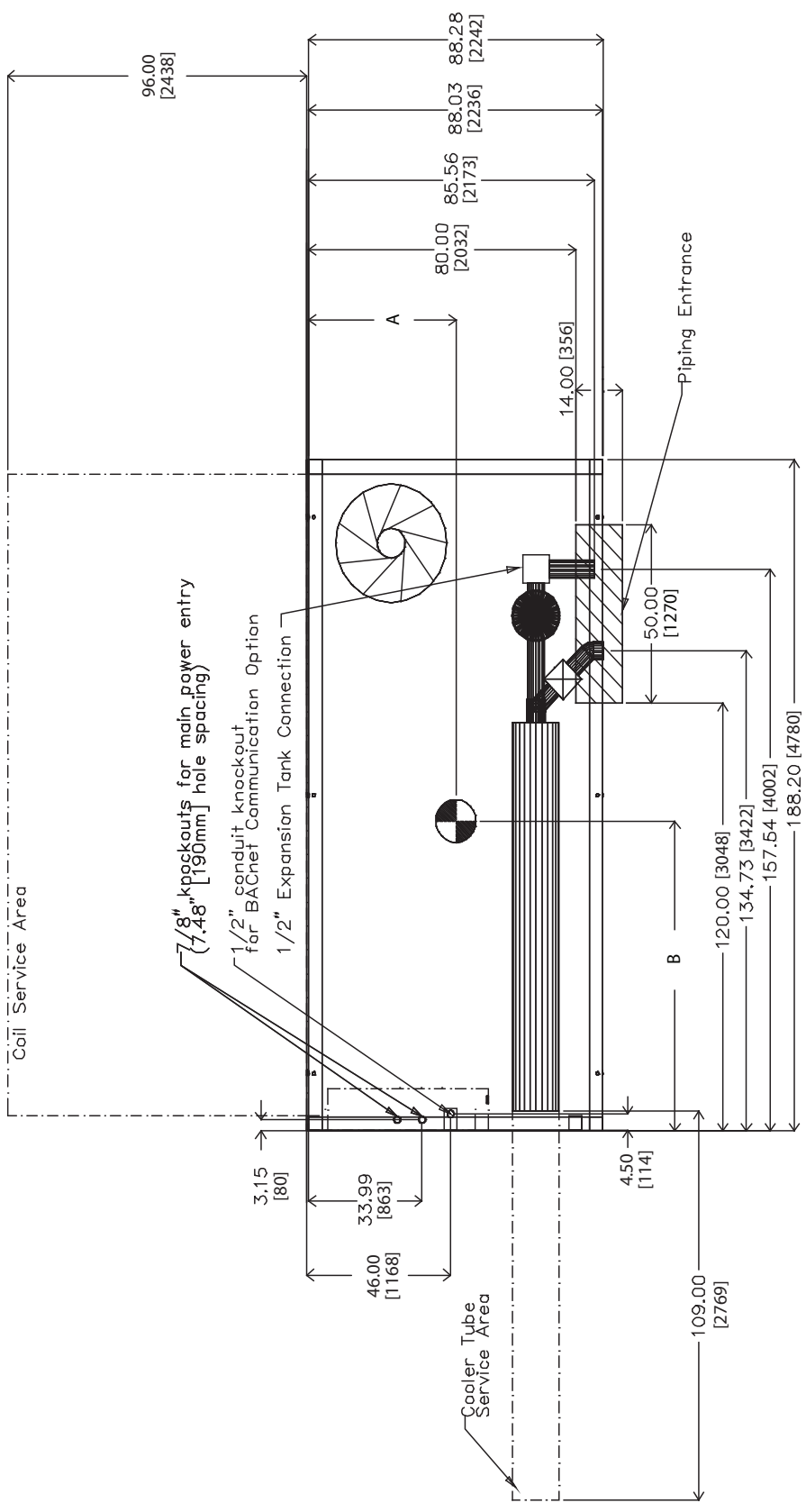

TOP VIEW

30XA UNIT	A	B
090	44.11 [1120]	86.93 [2208]
100	44.11 [1120]	87.22 [2215]
110	44.11 [1120]	87.62 [2226]
120	44.11 [1120]	87.12 [2213]

NOTES:
1. Unit must have clearances as follows:
   Top — Do not restrict
   Sides and Ends — 6 ft (1.8 m) from solid surface.
2. Temperature relief devices are located on liquid line and economizer assemblies and have 1/4-in. flare connection.
3. 3/8-in. NPT vents and drains located in each cooler head at each end of cooler.
4. Drawing depicts unit with single-point power and standard two-pass cooler. Refer to the Packaged Chiller Builder program for other configurations.
5. Dimensions are shown in inches. Dimensions in [ ] are in millimeters.

30XA090,100,110,120 WITH PUMP (cont)

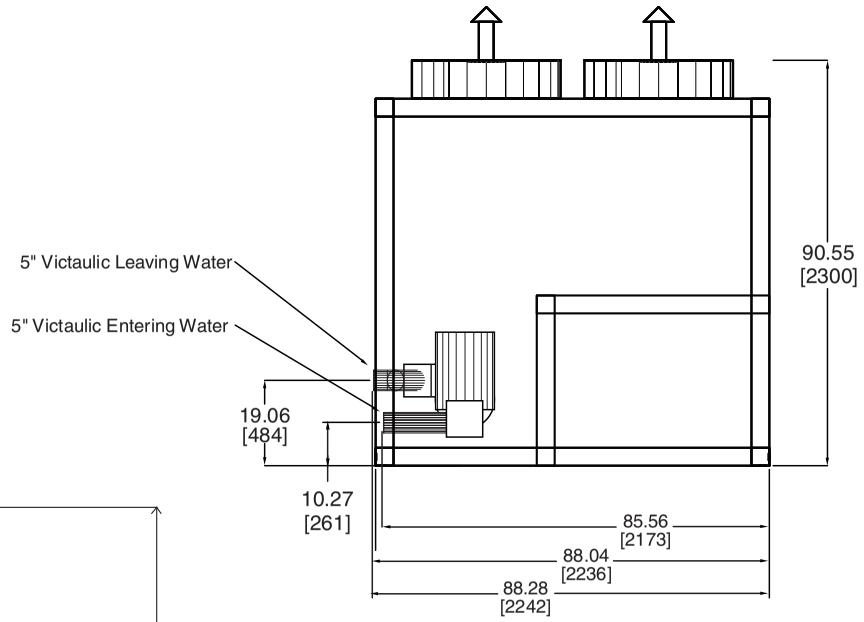

RIGHT END VIEW

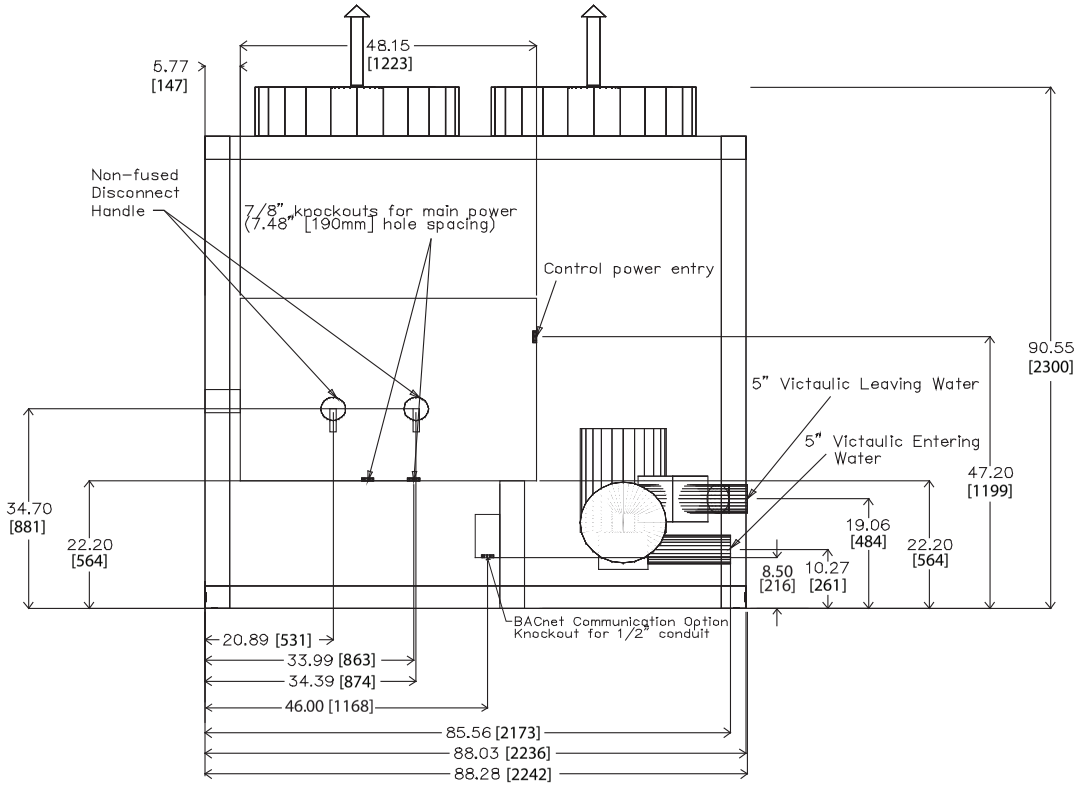

LEFT END VIEW

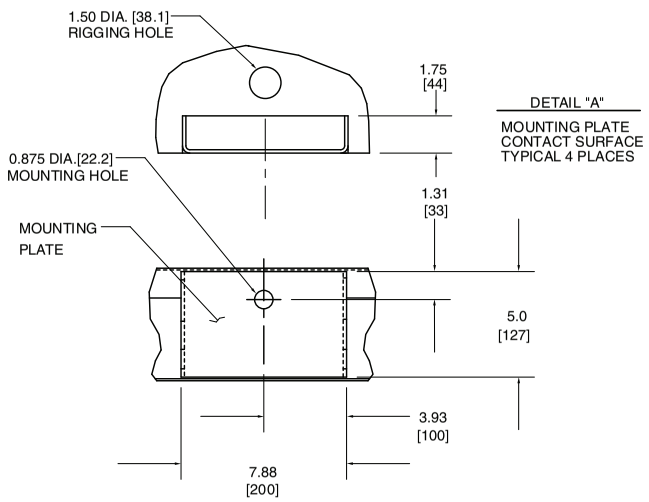

Dimensions (cont)

30XA090,100,110,120 WITH PUMP (cont)

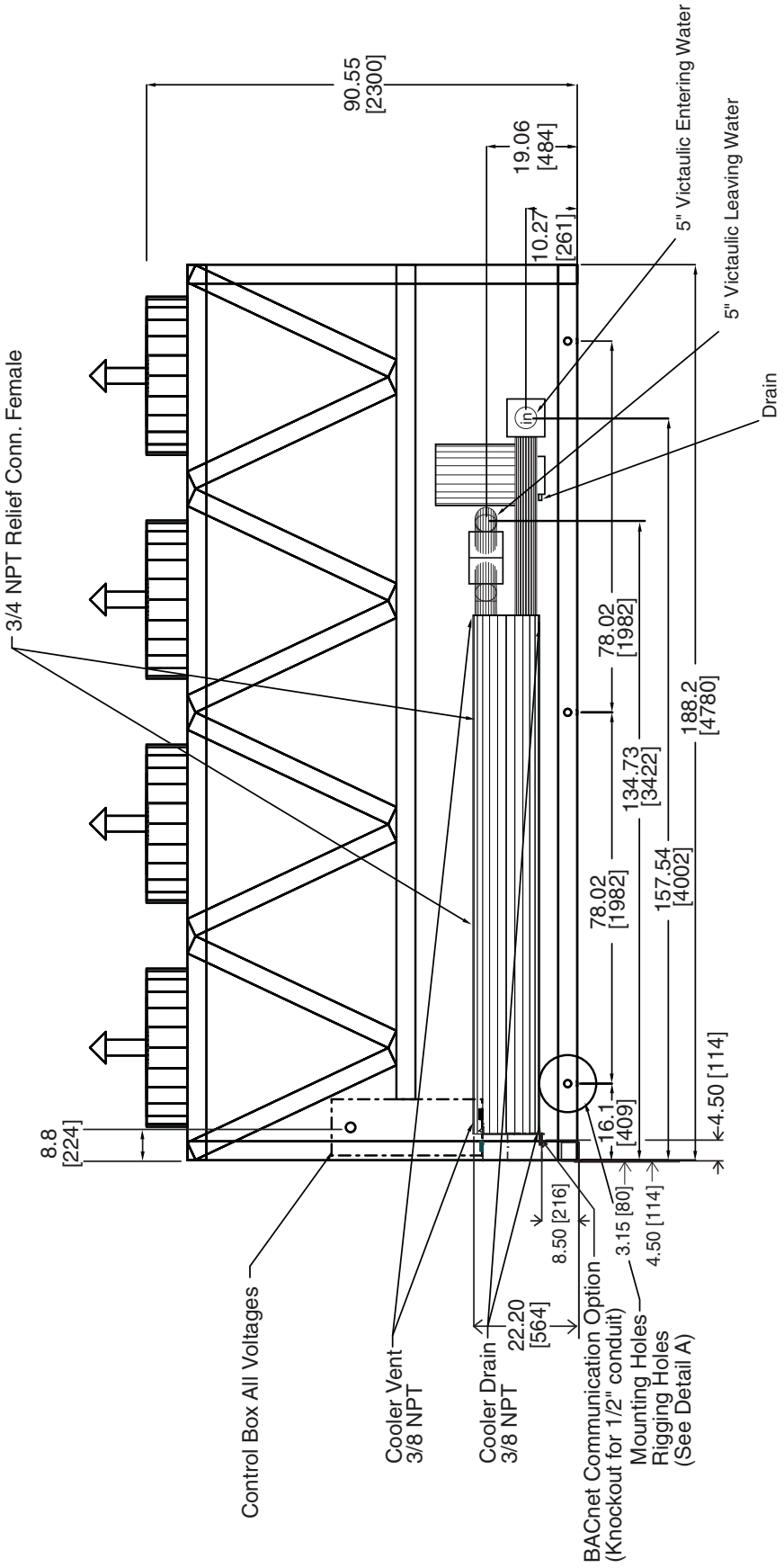

FRONT VIEW

30XA092,102 (DX COOLER)

30XA UNIT	CENTER OF GRAVITY		PUMP SUCTION (PS)			PUMP DISCHARGE (PD)		
	CGx	CGy	X ± 0.25	Y ± 0.25	Z ± 0.25	X ± 0.25	Y ± 0.25	Z ± 0.25
092	102.5 [2603.51]	35.5 [901.7]	32.40 [822.98]	10.79 [274.01]	11.45 [290.72]	13.32 [338.33]	15.23 [386.89]	7.8 [198.15]
102	102.2 [2595.91]	35.5 [901.7]	32.40 [822.98]	10.79 [274.01]	11.45 [290.72]	13.32 [338.33]	15.23 [386.89]	7.8 [198.15]

NOTES:
1. Unit must have clearances as follows:
   Top — Do not restrict
   Sides and Ends — 6 ft (1.8 m) from solid surface
   Airflow Side — 8 ft (2.4 m) required for coil service area.
2. All pumps have drains located at the bottom of volute for draining.
3. Temperature relief devices are located on suction line. Liquid line and filter drier of each circuit and have $^1/_4$-in. flare connection.
4. No pump package leaving water connection is same size and has same Y and Z dimensions as entering water. Also has same PDx dimension as pump package.
5. Leaving water throttling valve and support is factory supplied with pump package, but must be field installed.
6. Dimensions for entering water without hydronic kit are as shown in the drawing.
7. Dimensions are shown in inches. Dimensions in [ ] are in millimeters.

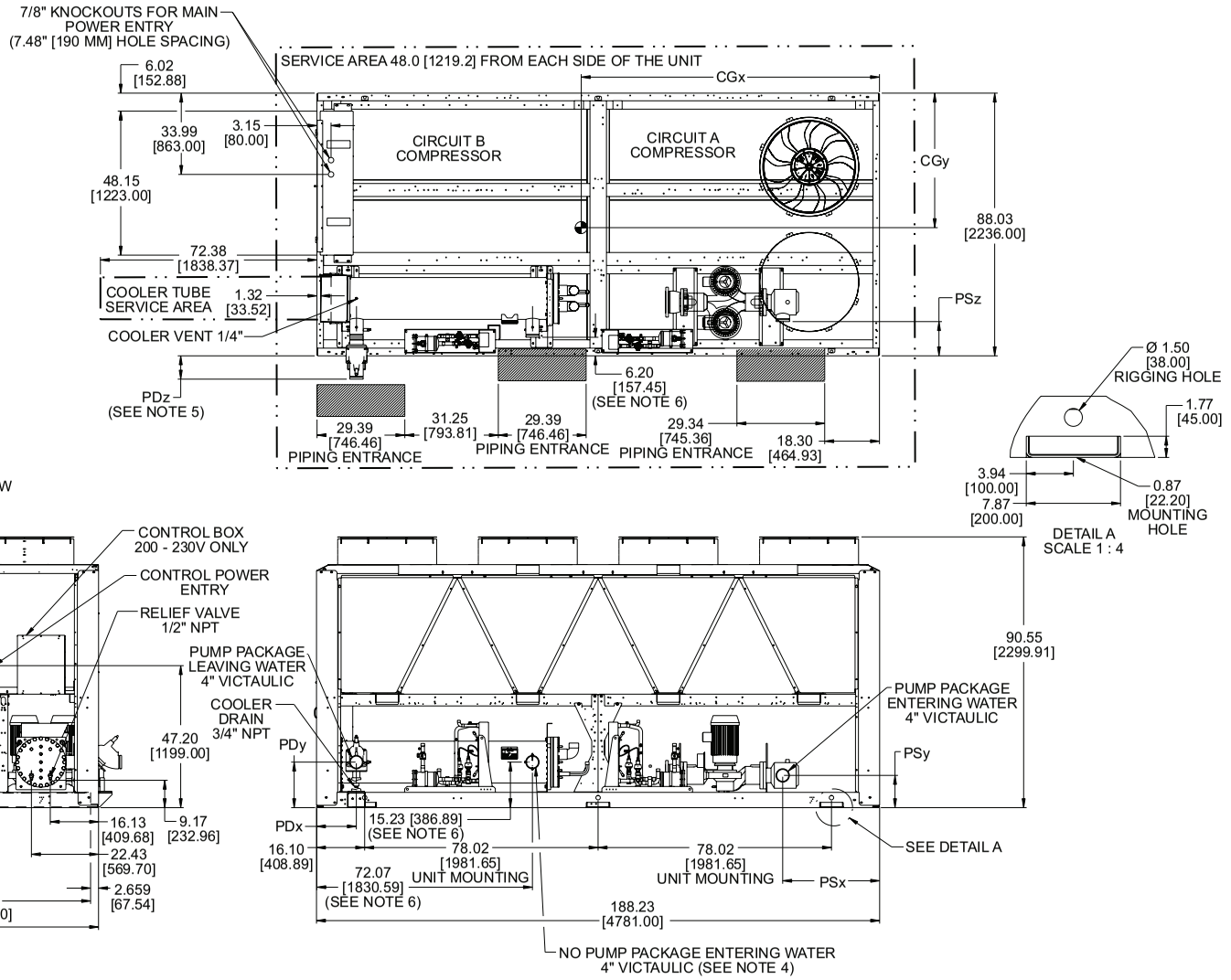

30XA112,122 (DX COOLER)

NOTES:
1. Unit must have clearances as follows:
   Top — Do not restrict
   Sides and Ends — 6 ft (1.8 m) from solid surface
   Airflow Side — 8 ft (2.4 m) required for coil service area.
2. All pumps have drains located at the bottom of volute for draining.
3. Temperature relief devices are located on suction line, liquid line and filter drier of each circuit and have 1/4-in. flare connection.
4. No pump package leaving water connection is same size and has same Y and Z dimensions as entering water. Also has same PDx dimension as pump package.
5. Leaving water throttling valve and support is factory supplied with pump package, but must be field installed.
6. Dimensions for entering water without hydronic kit are as shown in the drawing.
7. Dimensions are shown in inches. Dimensions in [ ] are in millimeters.

30XA UNIT	CENTER OF GRAVITY		PUMP SUCTION (PS)			PUMP DISCHARGE (PD)		
	CGx	CGy	X ± 0.25	Y ± 0.25	Z ± 0.25	X ± 0.25	Y ± 0.25	Z ± 0.25
112	101.8 [2585.7]	35.5 [901.7]	12.32 [312.93]	10.79 [274.01]	11.00 [279.40]	13.29 [337.57]	15.23 [386.89]	14.27 [362.46]
122	102.2 [2595.9]	35.5 [901.7]	12.32 [312.93]	10.79 [274.01]	11.00 [279.40]	13.29 [337.57]	15.23 [386.89]	14.27 [362.46]

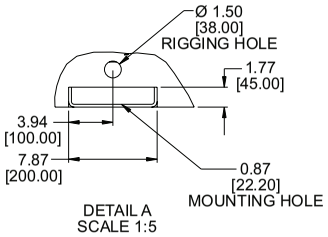

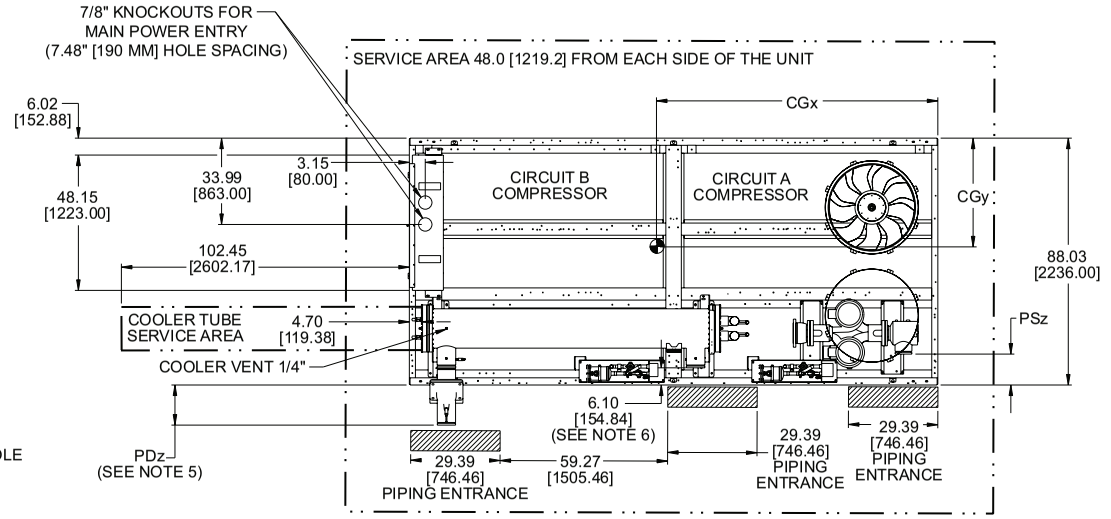

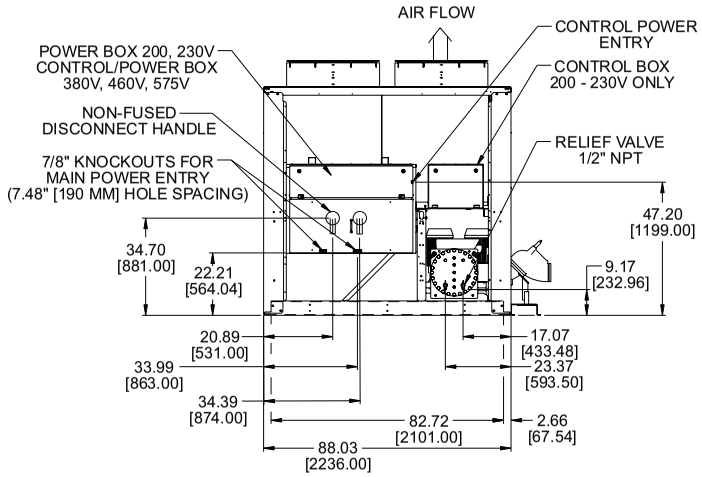

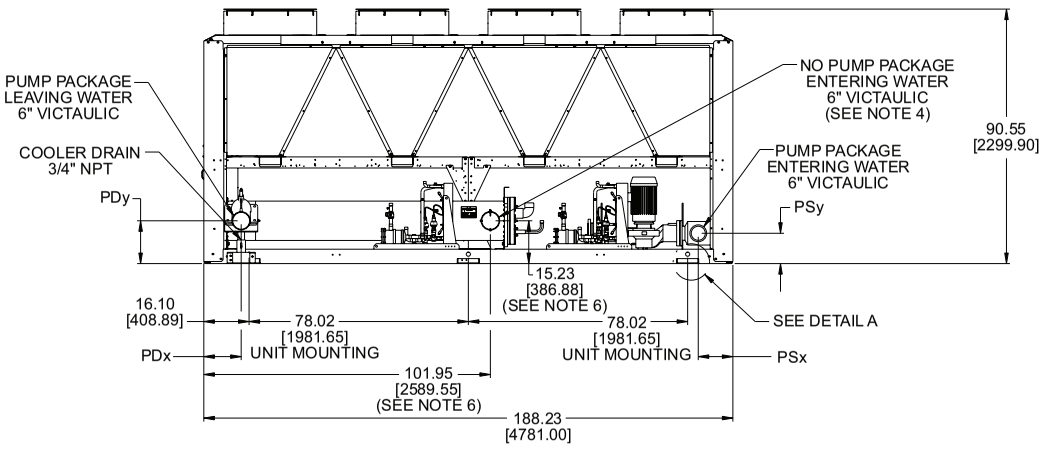

30XA140,160 WITHOUT PUMP

NOTES:
1. Unit must have clearances as follows:
   Top — Do not restrict
   Sides and Ends — 6 ft (1.8 m) from solid surface.
2. Temperature relief devices are located on liquid line and economizer assemblies and have 1/4-in. flare connection.
3. 3/8-in. NPT vents and drains located in each cooler head at each end of cooler.
4. Drawing depicts unit with single-point power, standard two-pass cooler, and nominal voltage range of 380 to 575 v. Refer to the Packaged Chiller Builder program for other configurations.
5. Dimensions are shown in inches. Dimensions in [ ] are in millimeters.

30XA UNIT	A	B
140	44.63 [1134]	115.88 [2943]
160	44.61 [1133]	115.64 [2937]

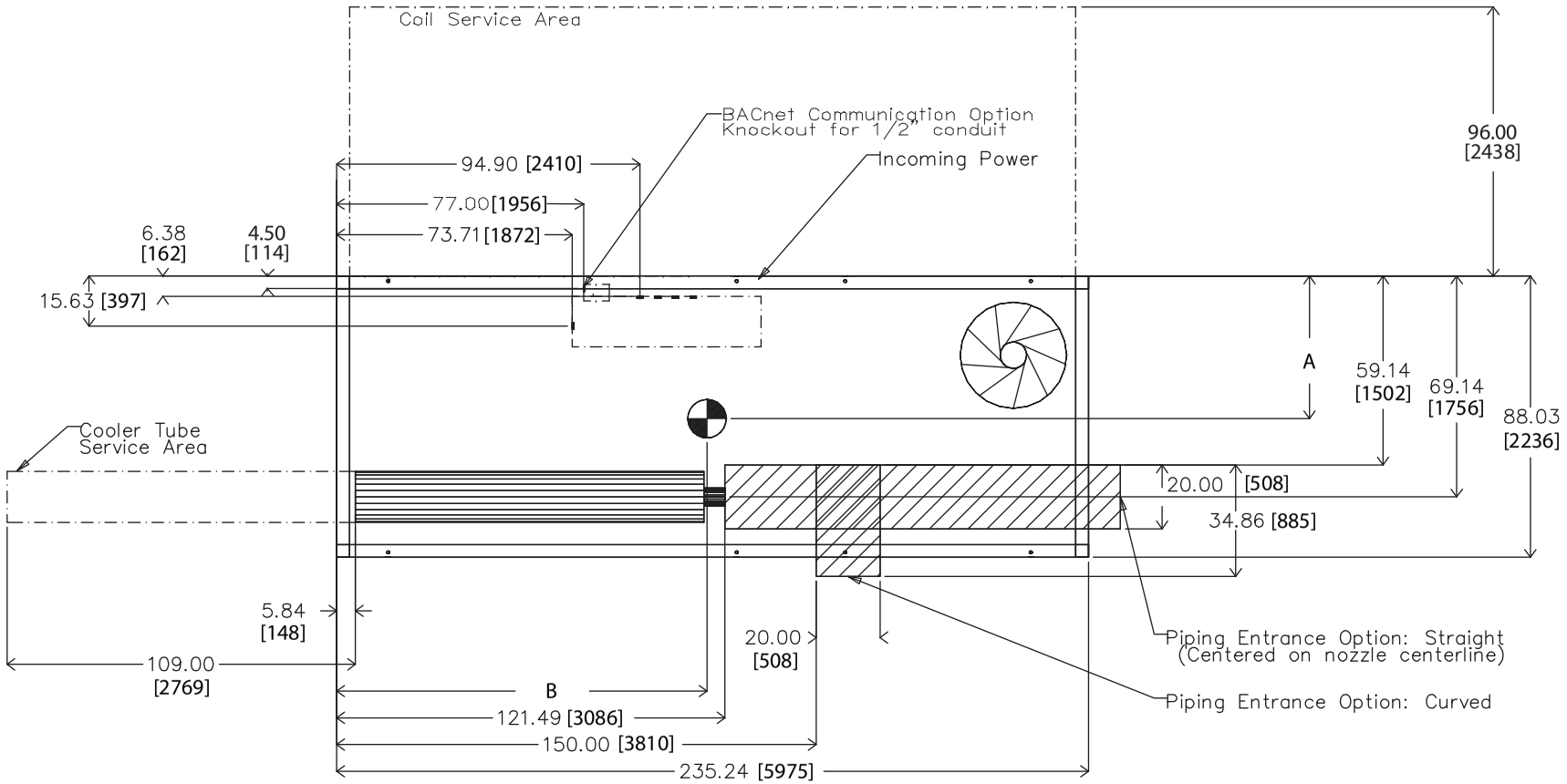

TOP VIEW

Dimensions (cont)

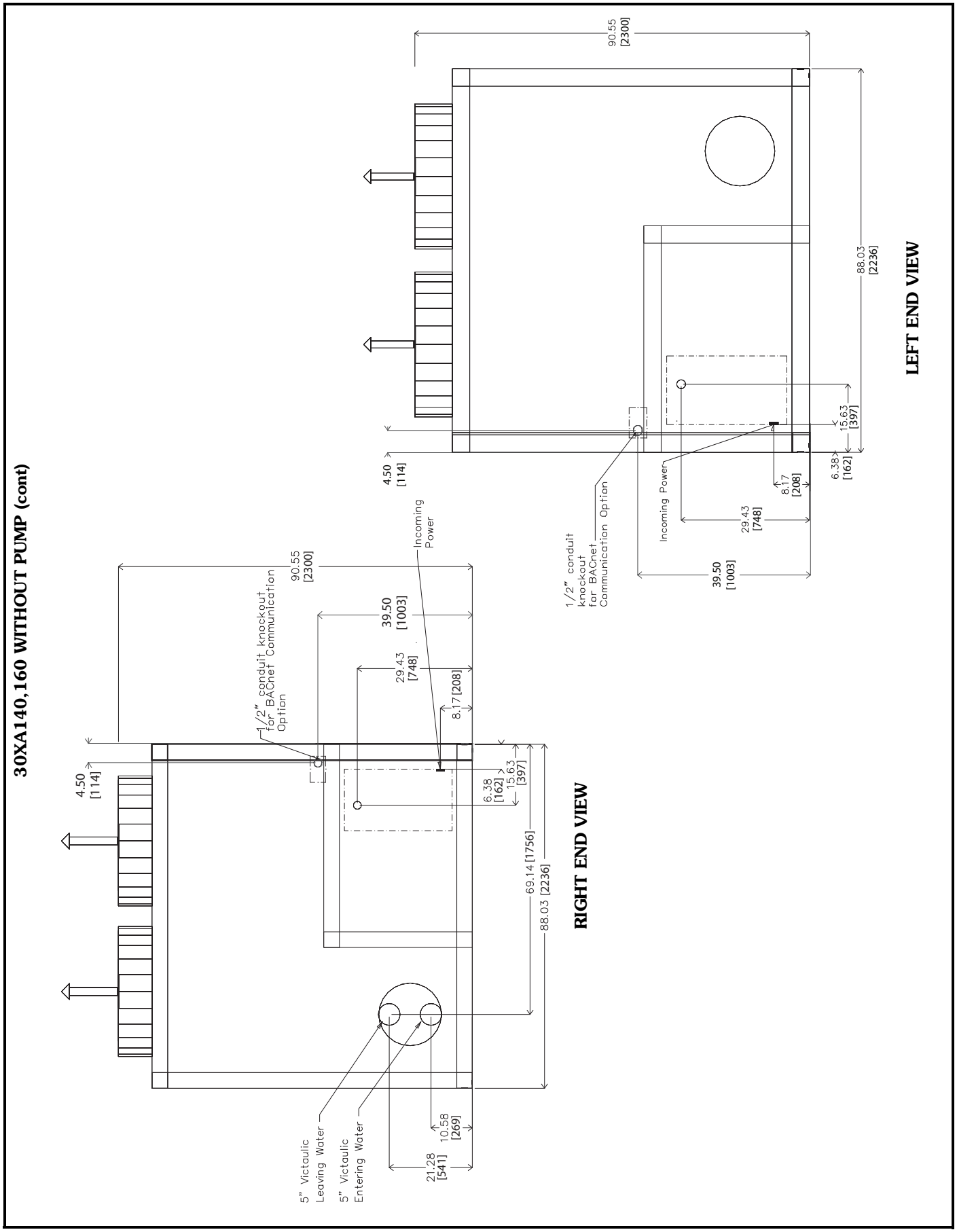

30XA140,160 WITHOUT PUMP (cont)

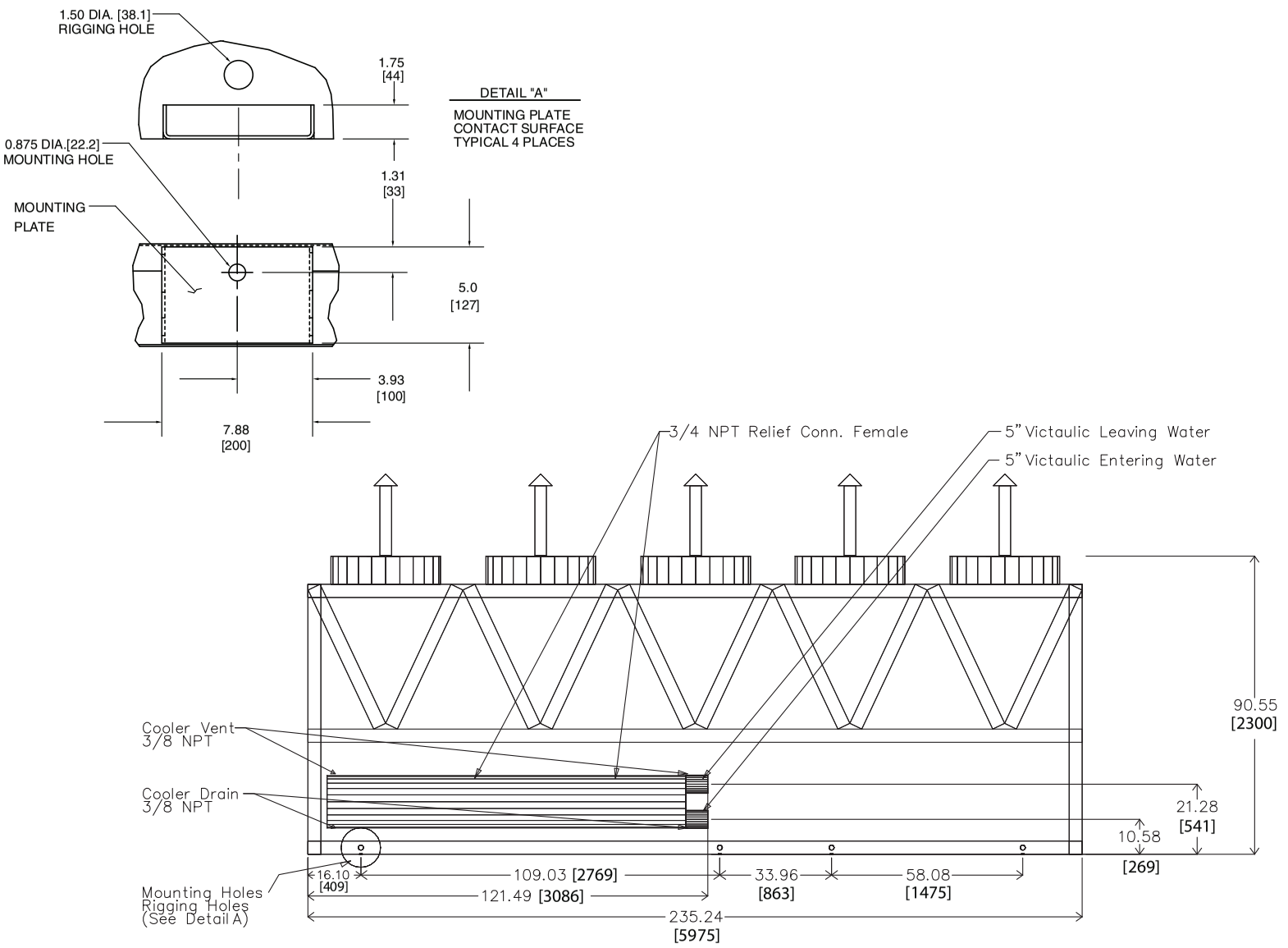

FRONT VIEW

Dimensions (cont)

30XA140,160 WITHOUT PUMP (cont)

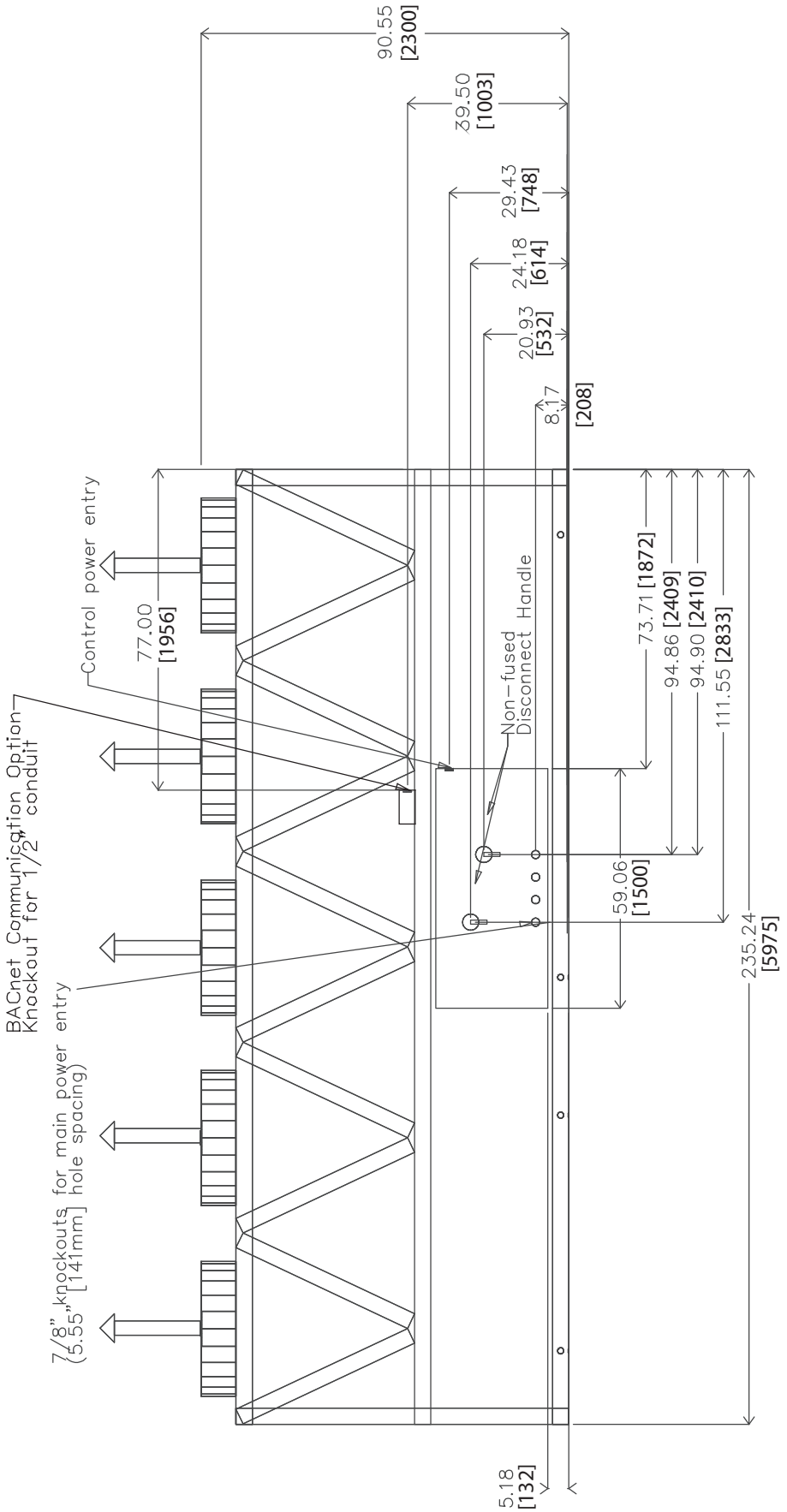

BACK VIEW

30XA140,160 WITH PUMP

NOTES:
1. Unit must have clearances as follows:
   Top — Do not restrict
   Sides and Ends — 6 ft (1.8 m) from solid surface.
2. Temperature relief devices are located on liquid line and economizer assemblies and have 1/4-in. flare connection.
3. 3/8-in. NPT vents and drains located in each cooler head at each end of cooler.
4. Drawing depicts unit with single-point power, standard two-pass cooler, and nominal voltage range of 380 to 575 v. Refer to the Packaged Chiller Builder program for other configurations.
5. Dimensions are shown in inches. Dimensions in [ ] are in millimeters.

30XA UNIT	A	B
140	44.63 [1134]	115.88 [2943]
160	44.61 [1133]	115.64 [2937]

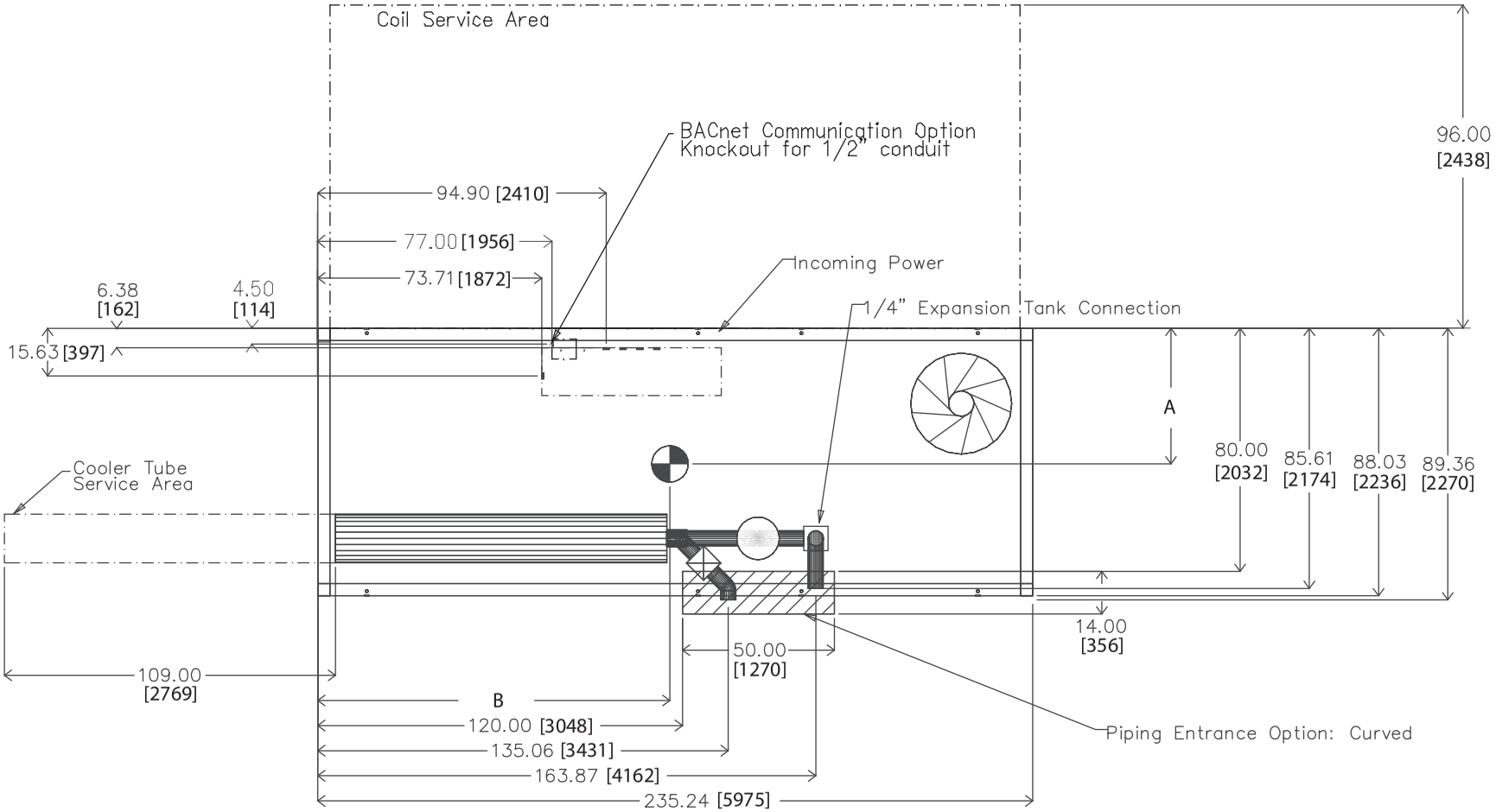

TOP VIEW

Dimensions (cont)

30XA140,160 WITH PUMP (cont)

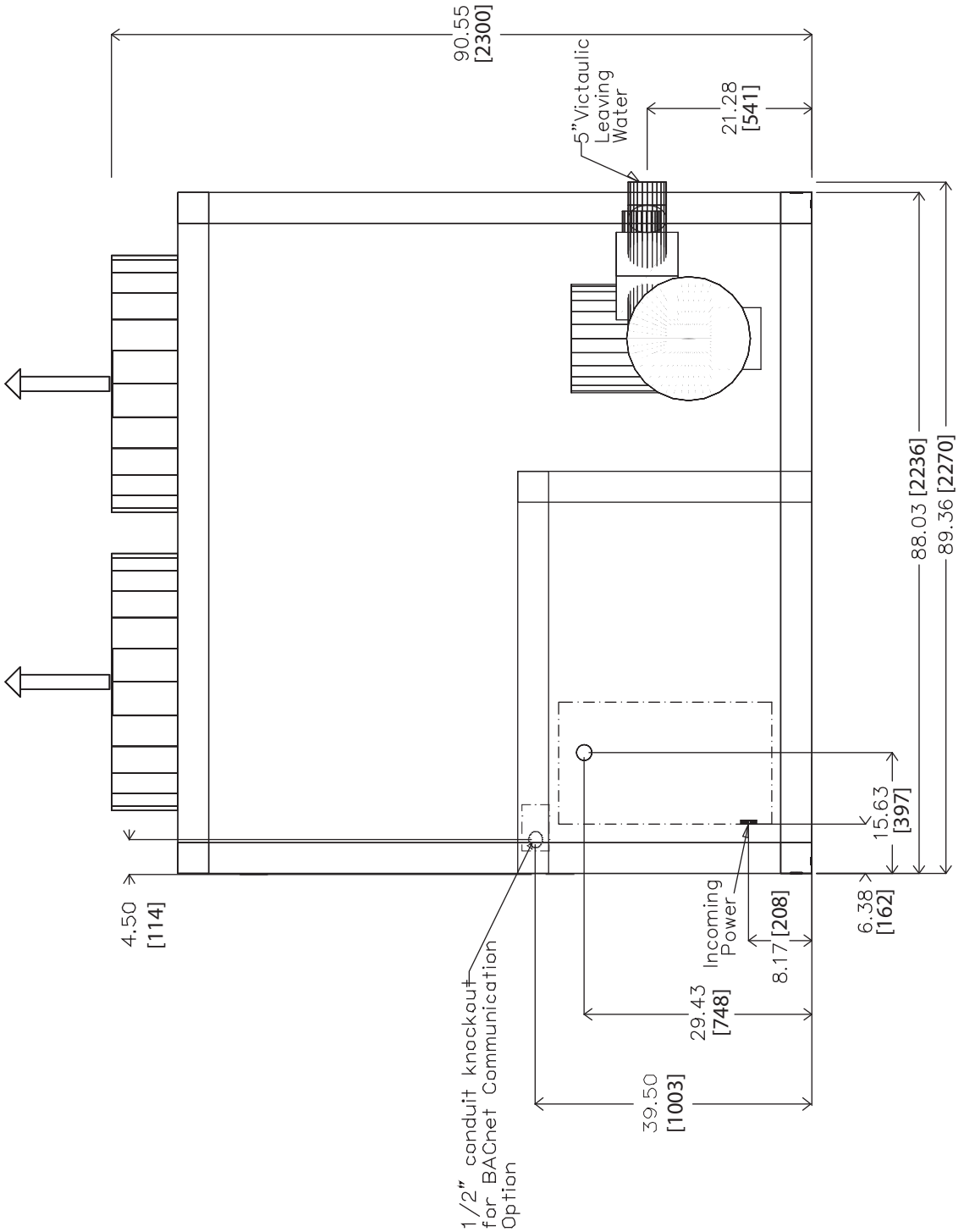

LEFT END VIEW

30XA140,160 WITH PUMP (cont)

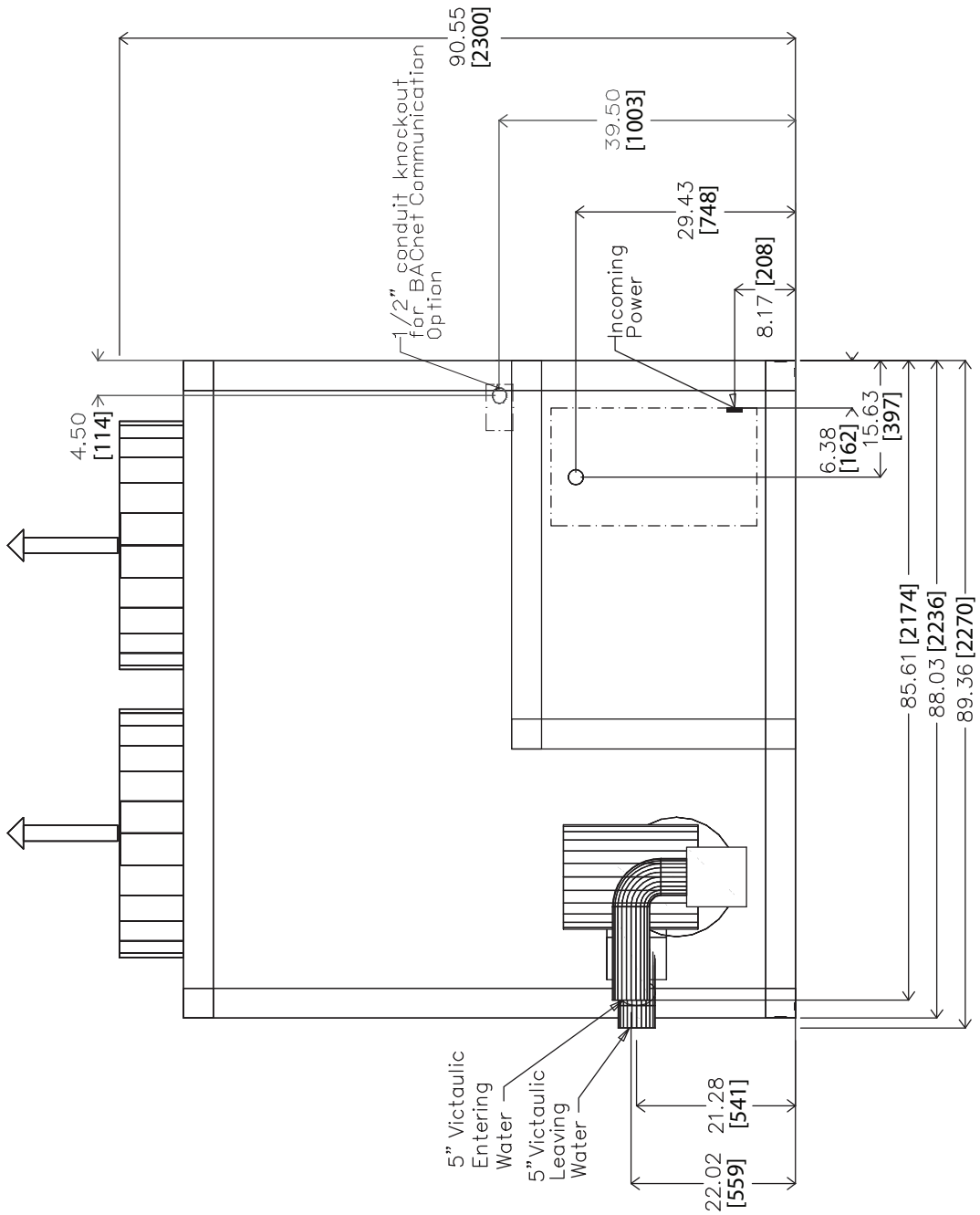

RIGHT END VIEW

Dimensions (cont)

30XA140,160 WITH PUMP (cont)

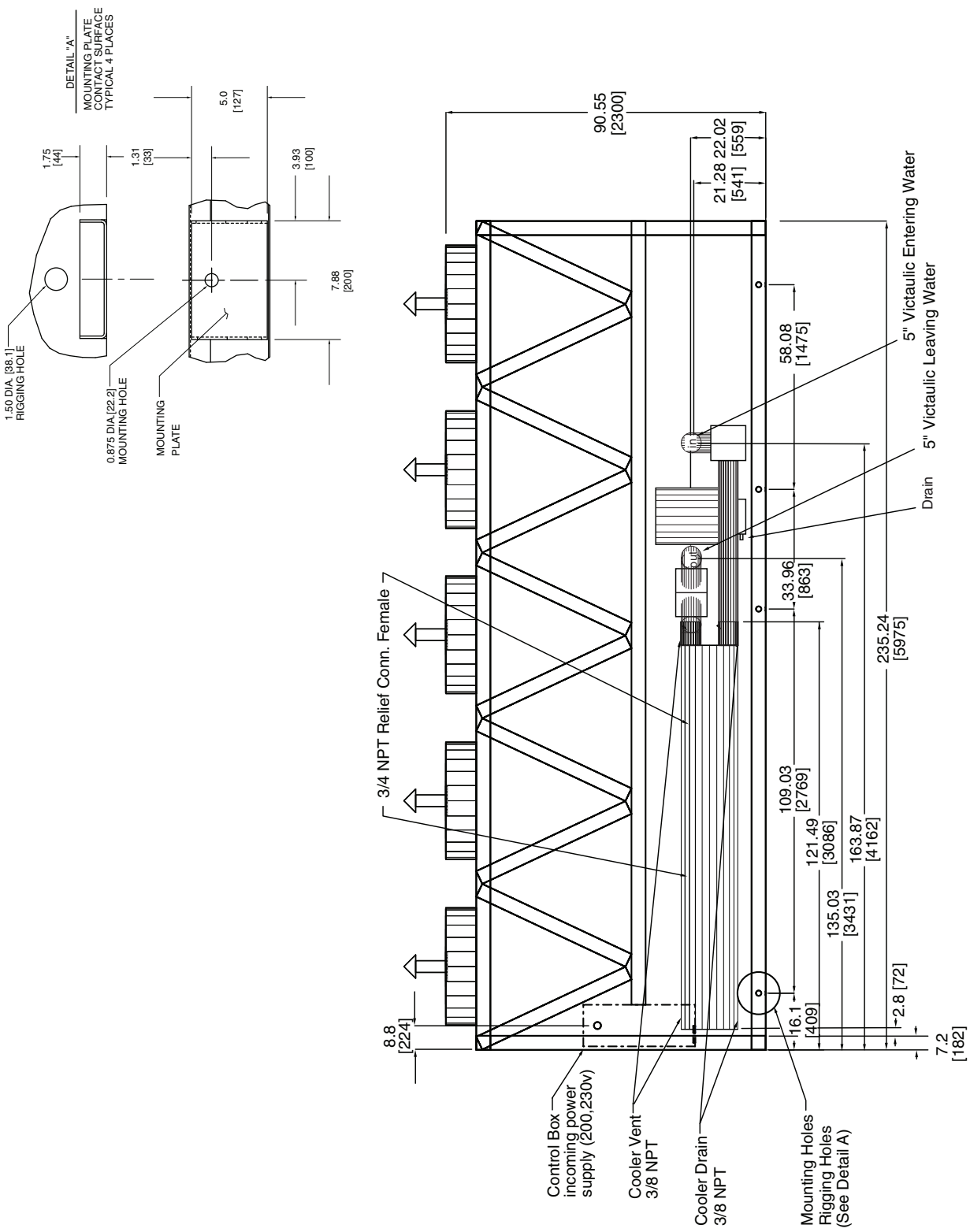

30XA140,160 WITH PUMP (cont)

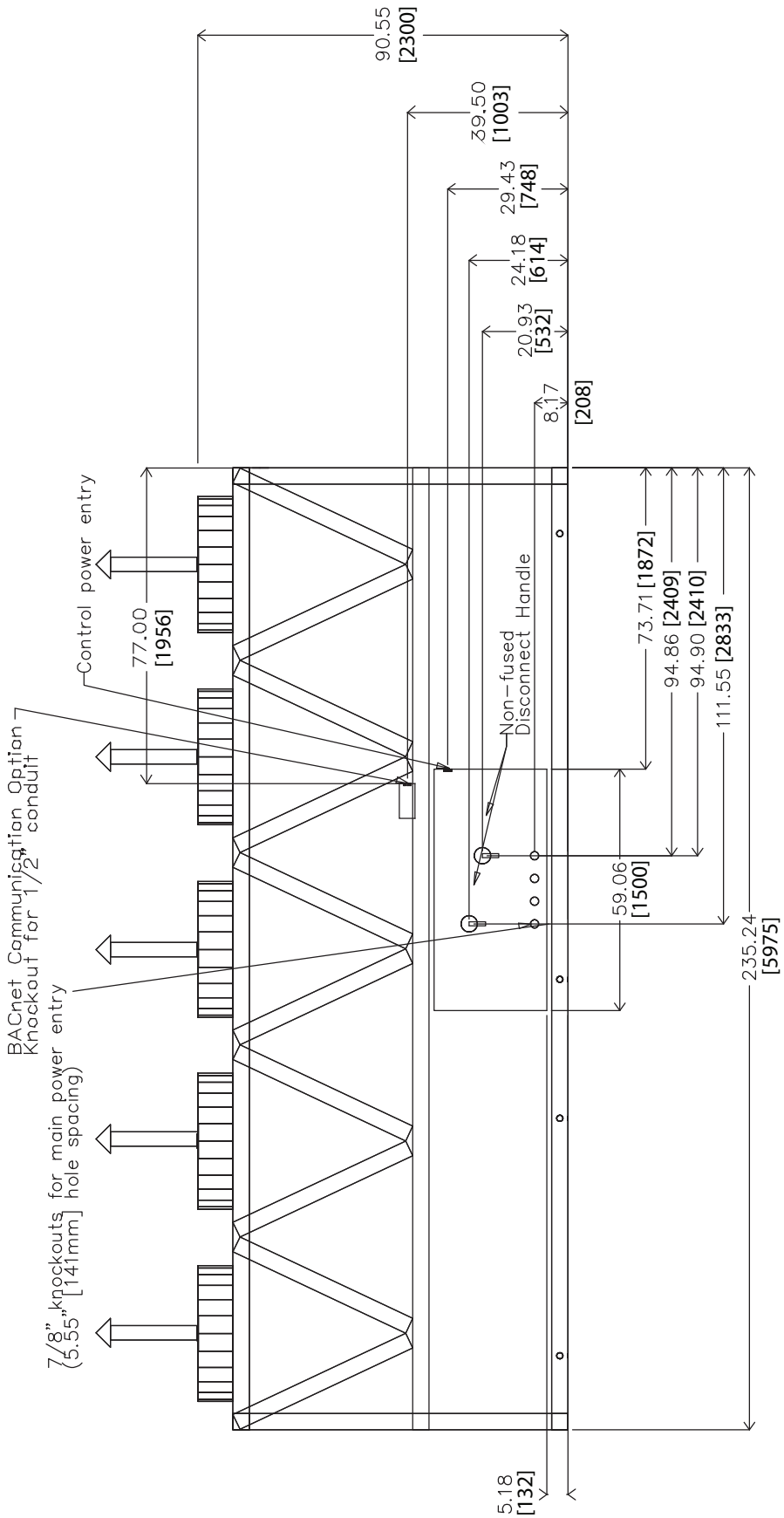

BACK VIEW

30XA142,162 (DX COOLER)

NOTES:
1. Unit must have clearances as follows:
   Top — Do not restrict
   Sides and Ends — 6 ft (1.8 m) from solid surface
   Airflow Side — 8 ft (2.4 m) required for coil service area.
2. All pumps have drains located at the bottom of volute for draining.
3. Temperature relief devices are located on suction line, liquid line and filter drier of each circuit and have 1/4-in. flare connection.
4. No pump package leaving water connection is same size and has same Y and Z dimensions as entering water. Also has same PDx dimension as pump package.
5. Leaving water throttling valve and support is factory supplied with pump package, but must be field installed.
6. Dimensions for entering water without hydronic kit are as shown in the drawing.
7. Dimensions are shown in inches. Dimensions in [ ] are in millimeters.

30XA UNIT	CENTER OF GRAVITY		PUMP SUCTION (PS)			PUMP DISCHARGE (PD)		
	CGx	CGy	X ± 0.25	Y ± 0.25	Z ± 0.25	X ± 0.25	Y ± 0.25	Z ± 0.25
142	102.0 [2590.8]	36.0 [914.4]	12.07 [306.58]	11.07 [281.18]	10.51 [266.95]	47.49 [1206.25]	16.43 [417.32]	15.00 [381.00]
162	102.0 [2590.8]	36.0 [914.4]	12.07 [306.58]	11.07 [281.18]	10.51 [266.95]	47.49 [1206.25]	16.43 [417.32]	15.00 [381.00]

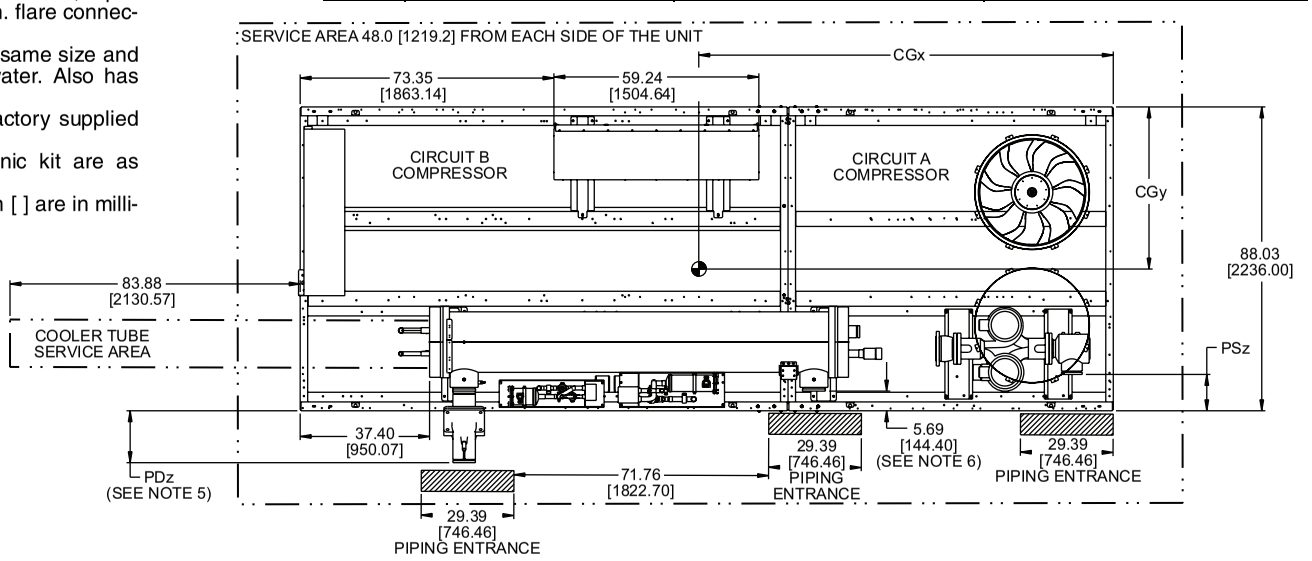

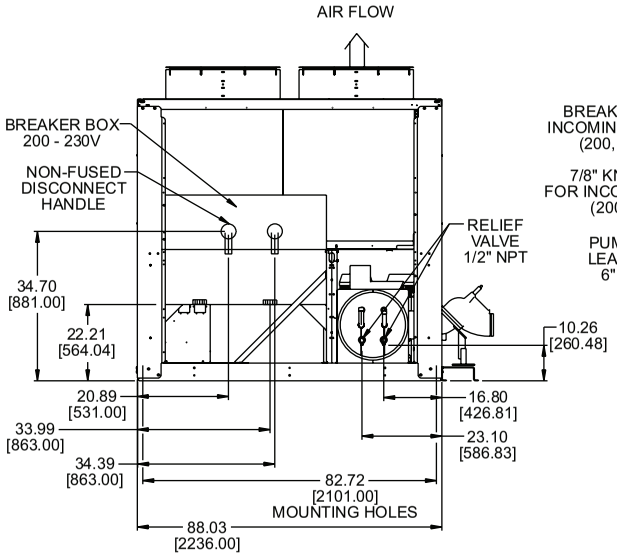

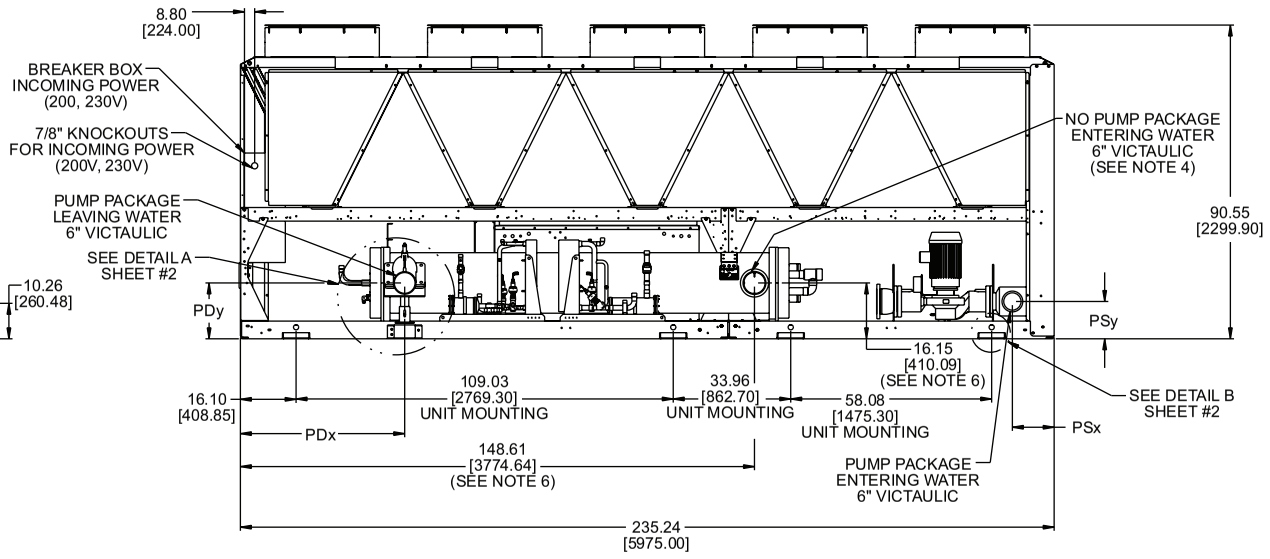

30XA142,162 (DX COOLER) (cont)

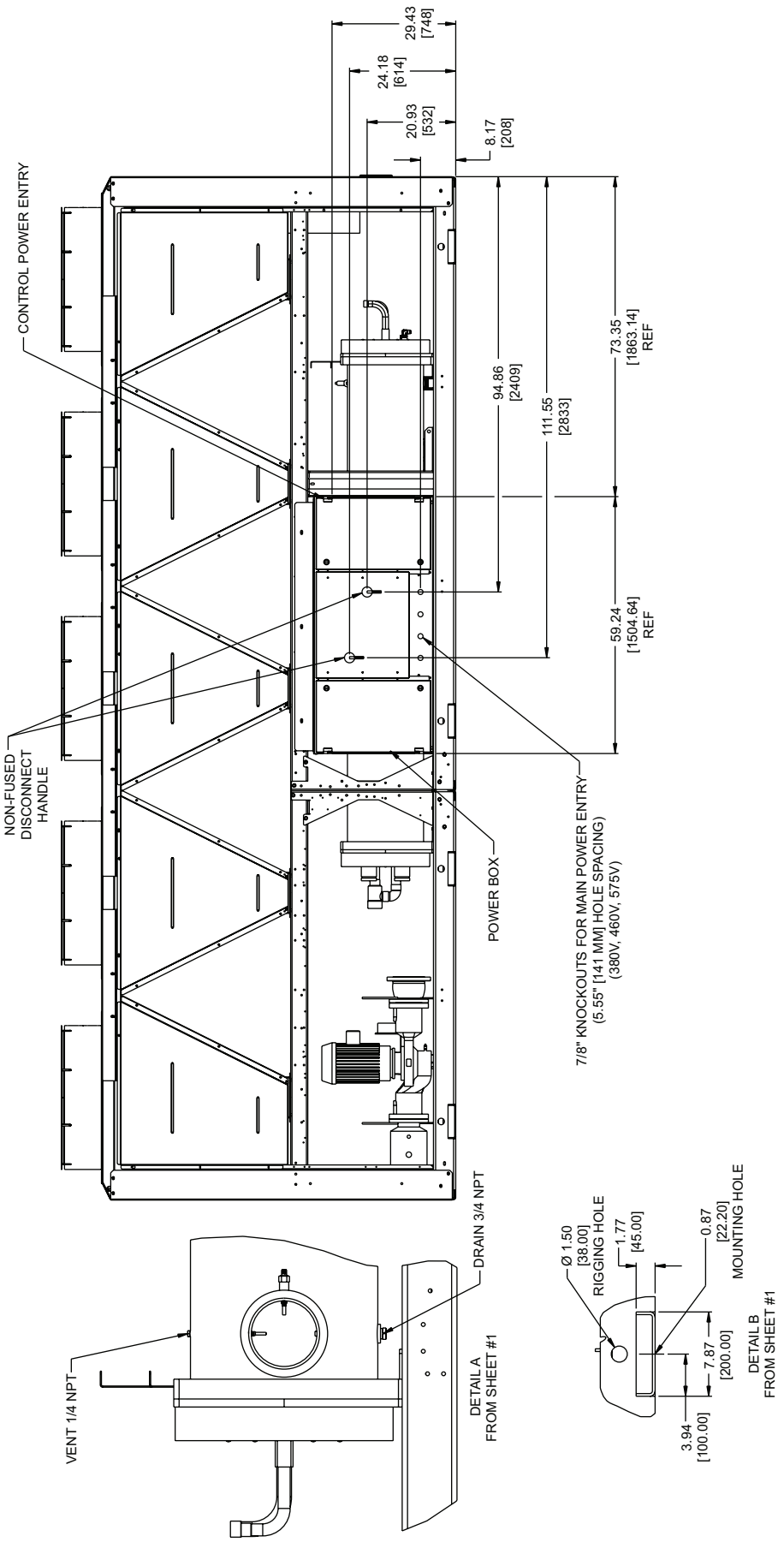

Dimensions (cont)

30XA180,200

30XA UNIT	A	B
180	46.12 [1171]	143.04 [3633]
200	46.15 [1172]	142.97 [3631]

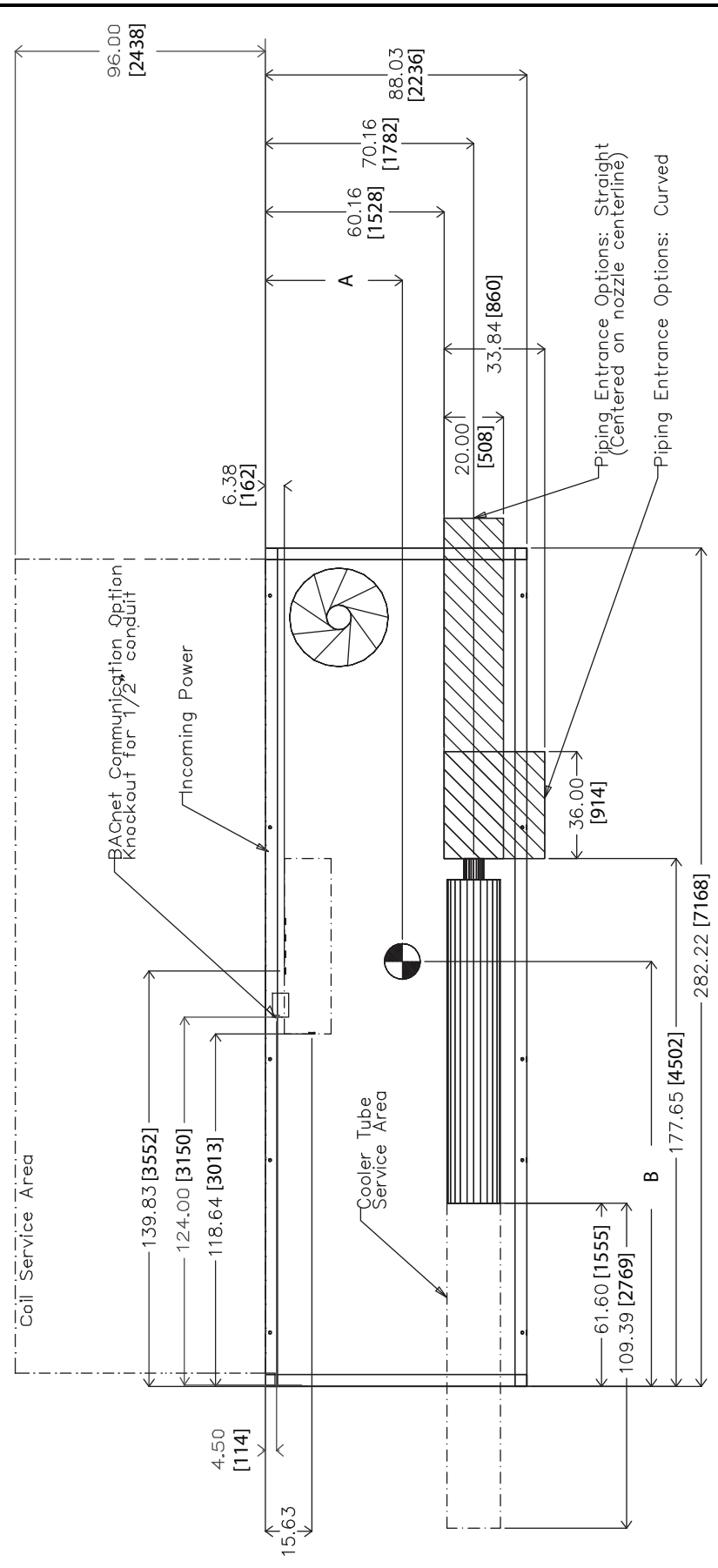

TOP VIEW

NOTES:
1. Unit must have clearances as follows:
   Top — Do not restrict
   Sides and Ends — 6 ft (1.8 m) from solid surface.
2. Temperature relief devices are located on liquid line and economizer assemblies and have 1/4-in. flare connection.
3. 3/8-in. NPT vents and drains located in each cooler head at each end of cooler.
4. Drawing depicts unit with single point power, standard two-pass cooler, and a nominal voltage range of 380 to 575 v. Refer to the Packaged Chiller Builder program for other configurations.
5. Dimensions are shown in inches. Dimensions in [ ] are in millimeters.

30XA180,200 (cont)

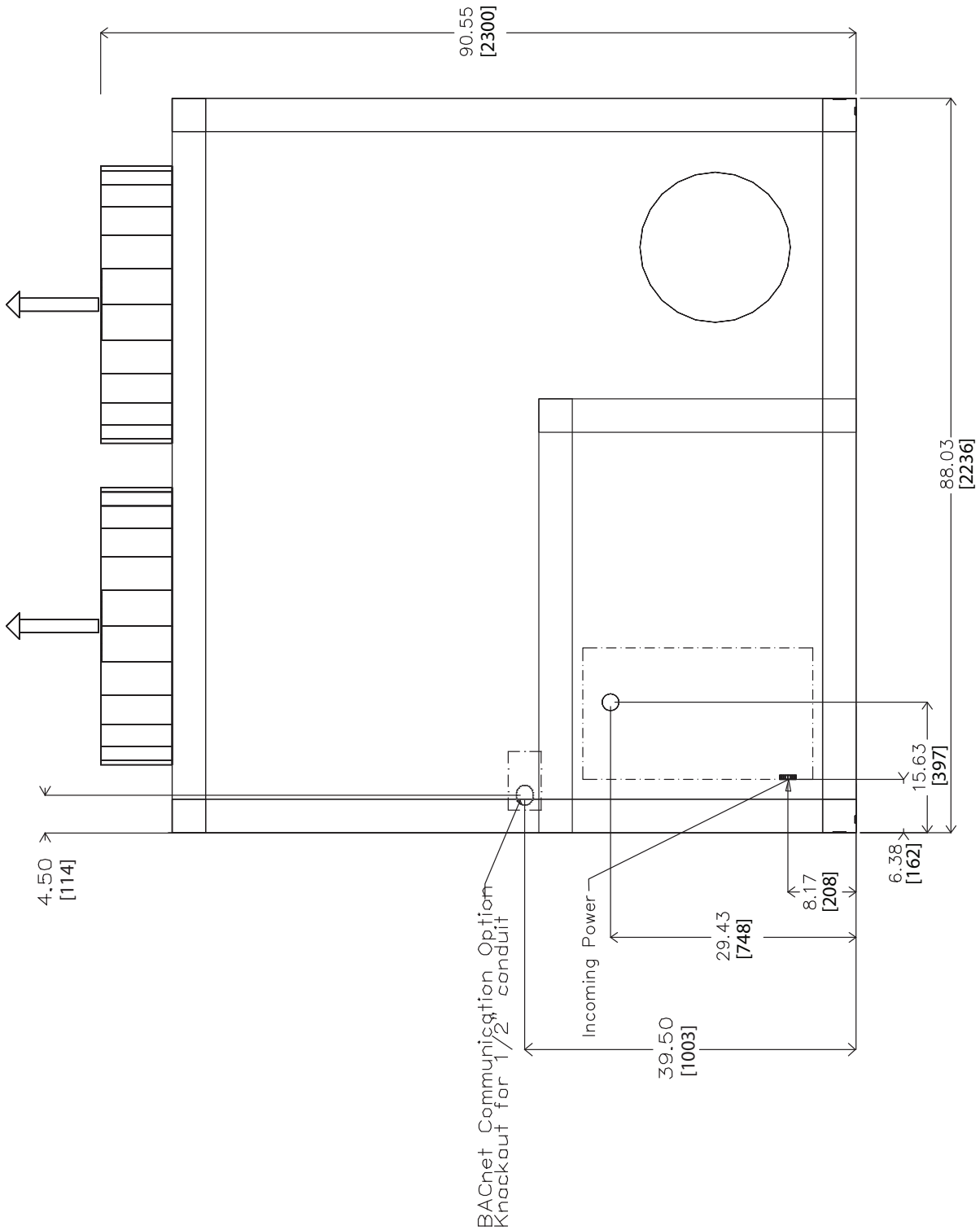

LEFT END VIEW

Dimensions (cont)

30XA180,200 (cont)

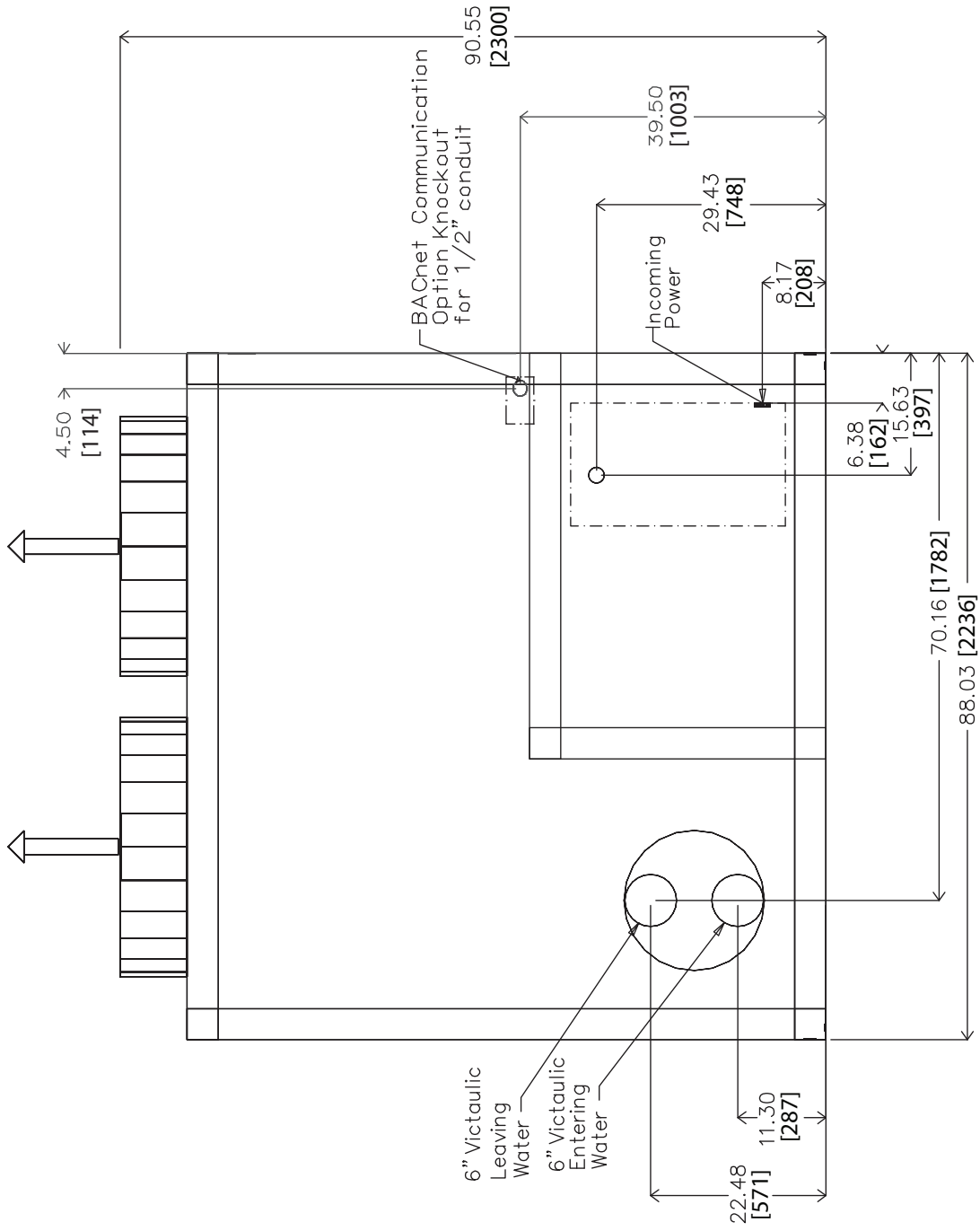

RIGHT END VIEW

30XA180,200 (cont)

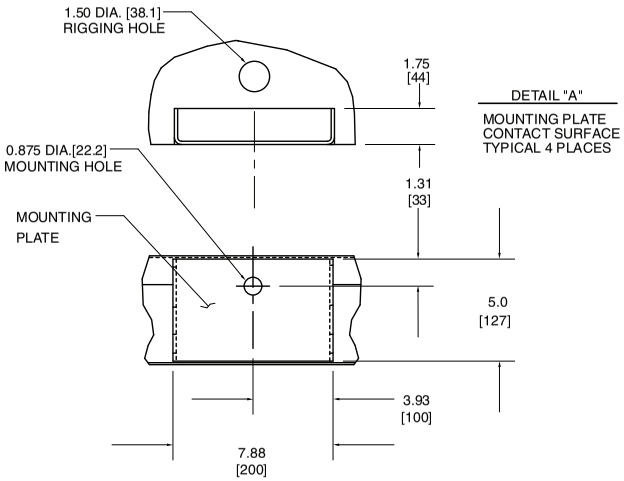

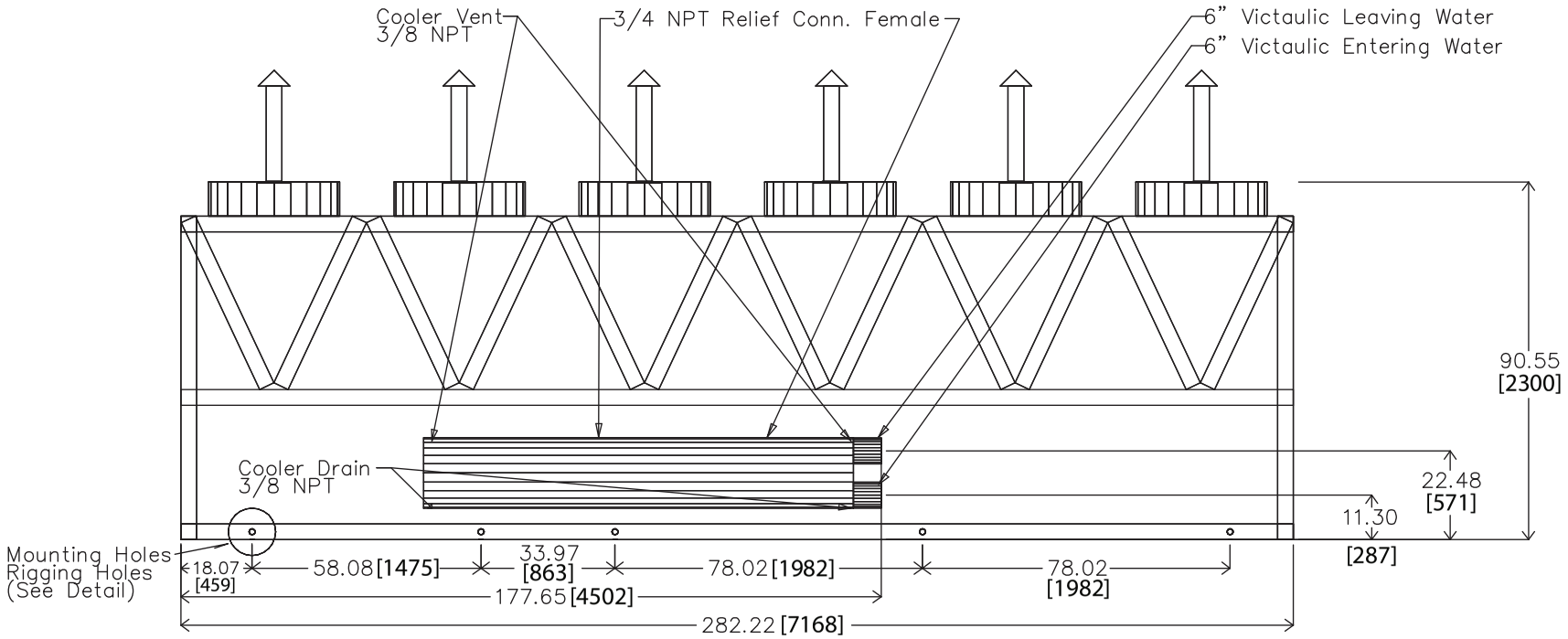

FRONT VIEW

Dimensions (cont)

30XA180,200 (cont)

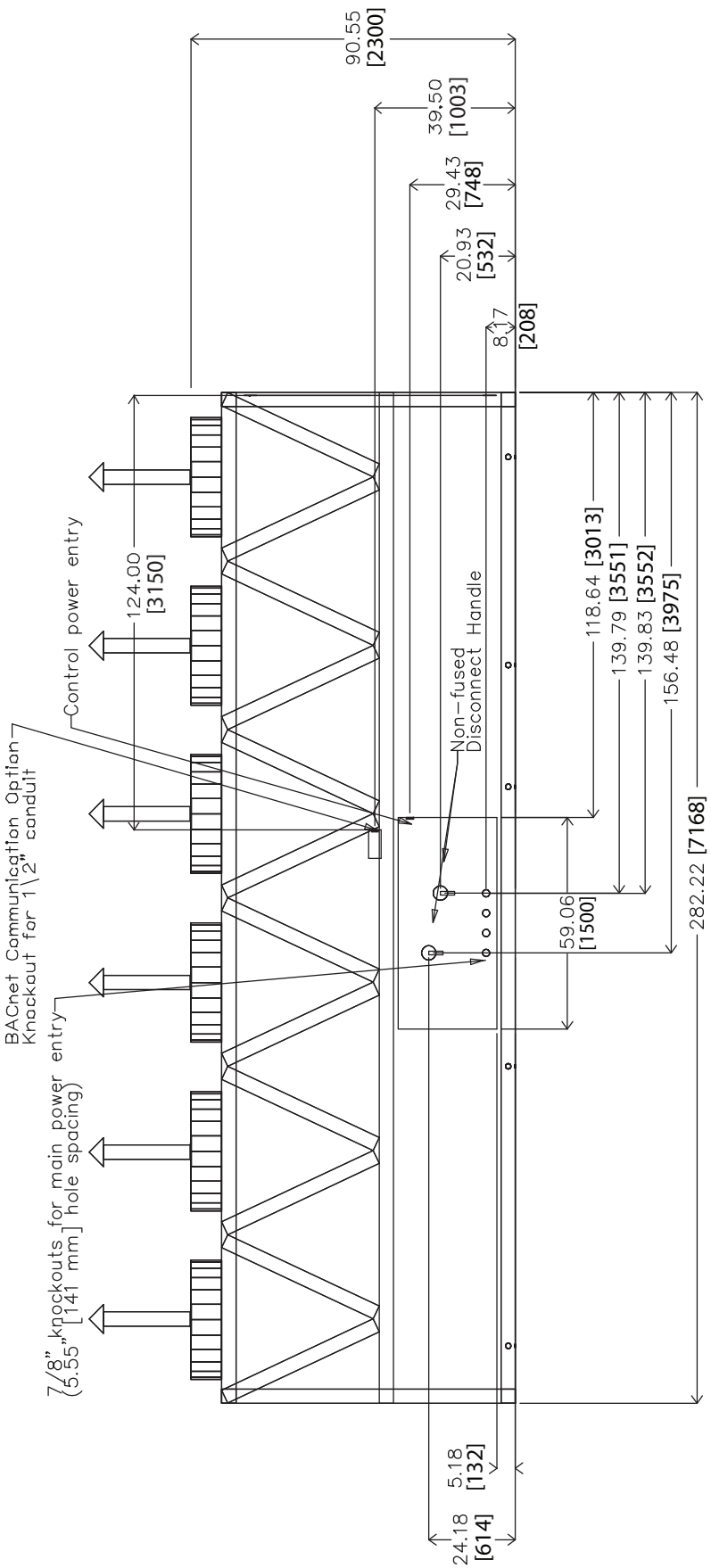

BACK VIEW

30XA182,202 (DX COOLER)

NOTES:
1. Unit must have clearances as follows:
   Top — Do not restrict
   Sides and Ends — 6 ft (1.8 m) from solid surface.
   For airflow side — 8 ft (2.4 m) required for coil service area.
2. Temperature relief devices located on suction line, liquid line, and filter frier of each circuit and have 1/4-in. flare connection.
3. Dimensions are shown in inches. Dimensions in [ ] are in millimeters.

	CENTER OF GRAVITY	
30XA UNIT	CGx	CGy
30XA-182	138.0 [3505.2]	38.0 [965.2]
30XA-202	138.0 [3505.2]	38.0 [965.2]

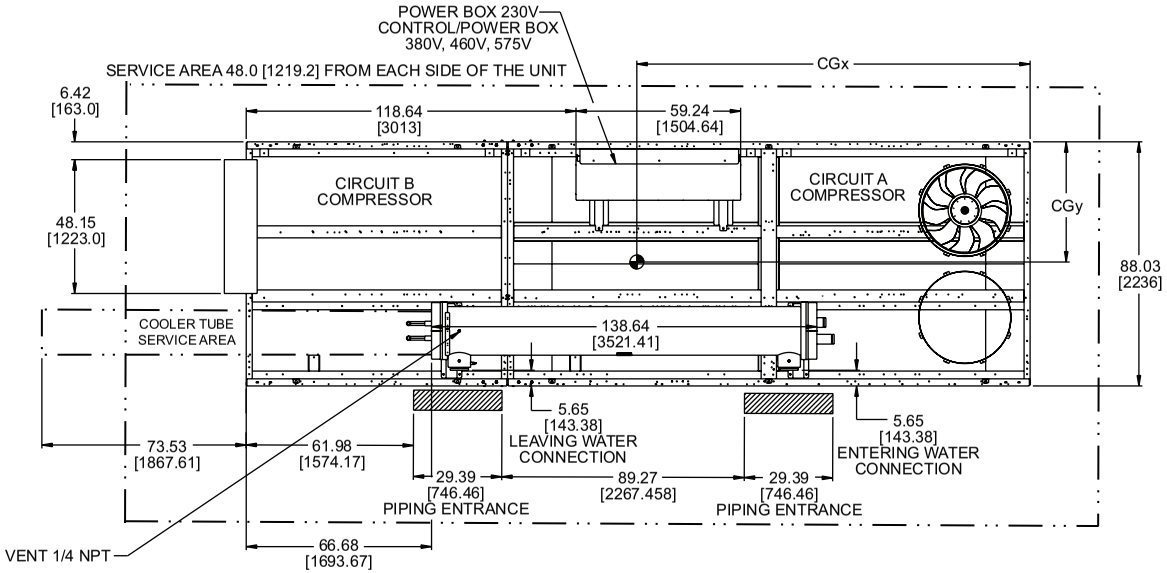

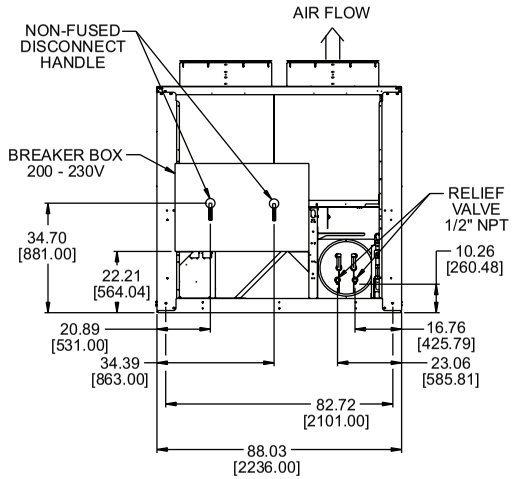

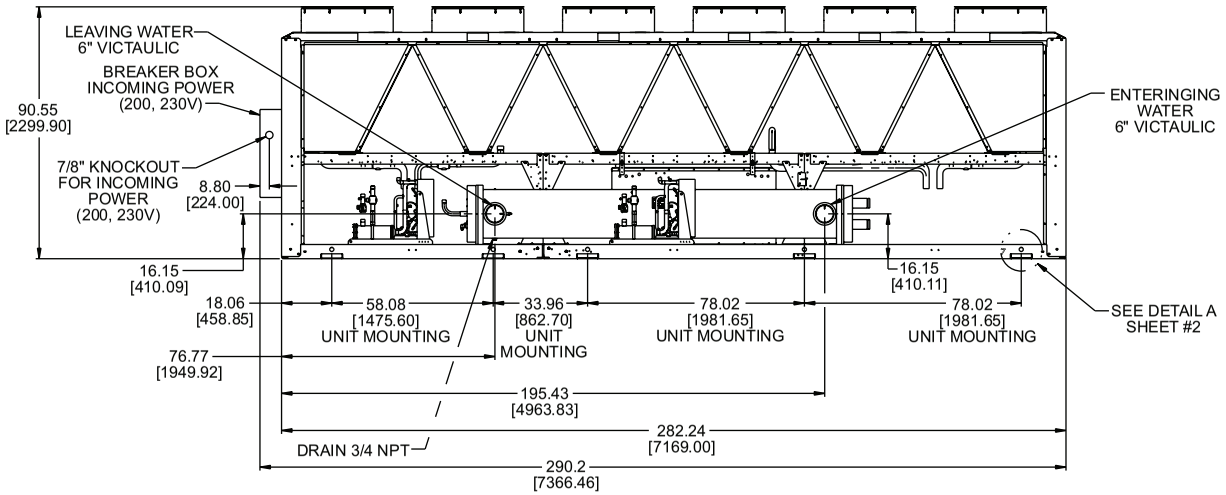

Dimensions (cont)

30XA182,202 (DX COOLER) (cont)

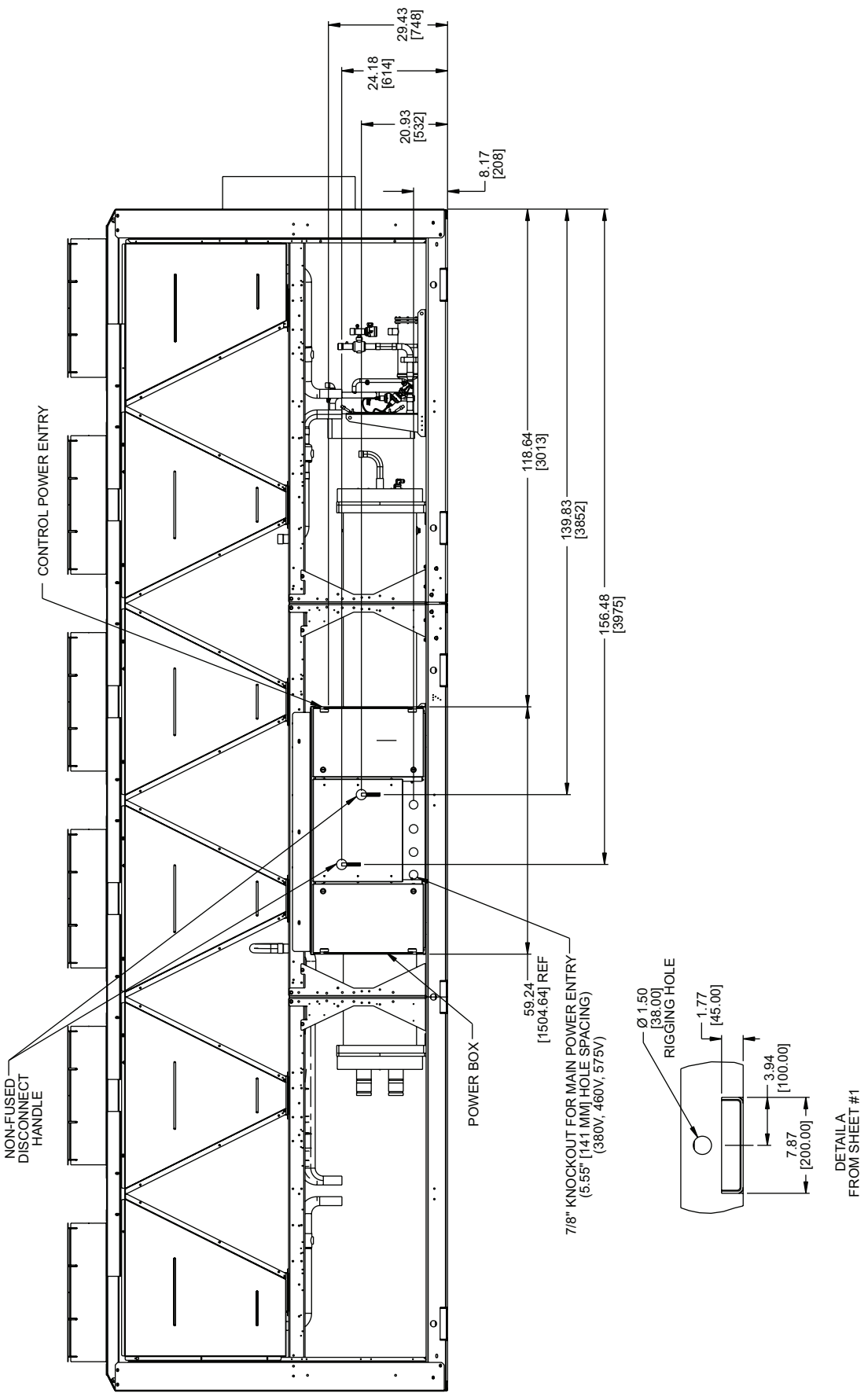

30XA220,240

NOTES:
1. Unit must have clearances as follows:
   Top — Do not restrict
   Sides and Ends — 6 ft (1.8 m) from solid surface.
2. Temperature relief devices are located on liquid line and economizer assemblies and have 1/4-in. flare connection.
3. 3/8-in. NPT vents and drains located in each cooler head at each end of cooler.
4. Drawing depicts unit with single point power, standard two-pass cooler and nominal voltage range of 380 to 575 v. Refer to the Packaged Chiller Builder program for other configurations.
5. Dimensions are shown in inches. Dimensions in [ ] are in millimeters.

30XA UNIT	A	B
220	46.17 [1173]	171.42 [4354]
240	46.23 [1174]	170.83 [4339]

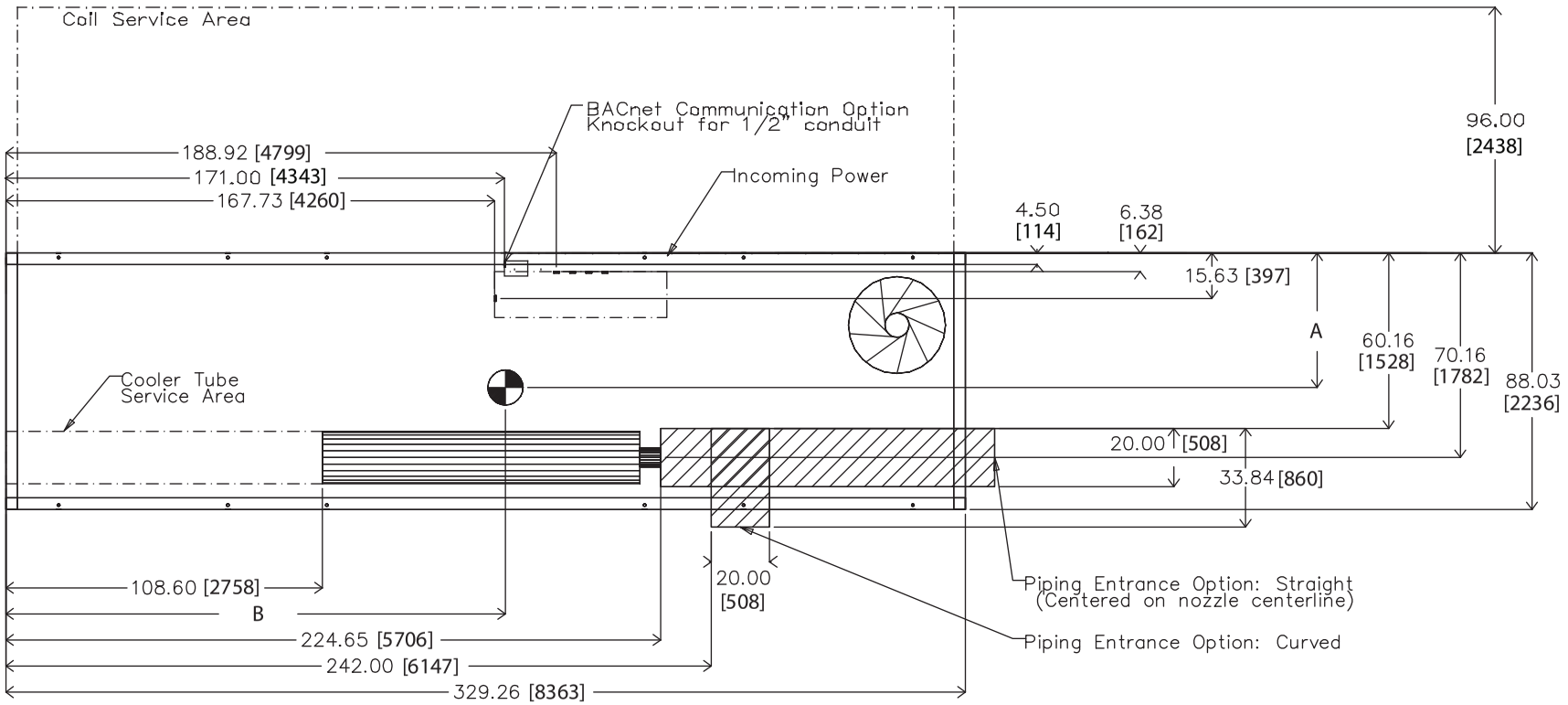

TOP VIEW

Dimensions (cont)

30XA220,240 (cont)

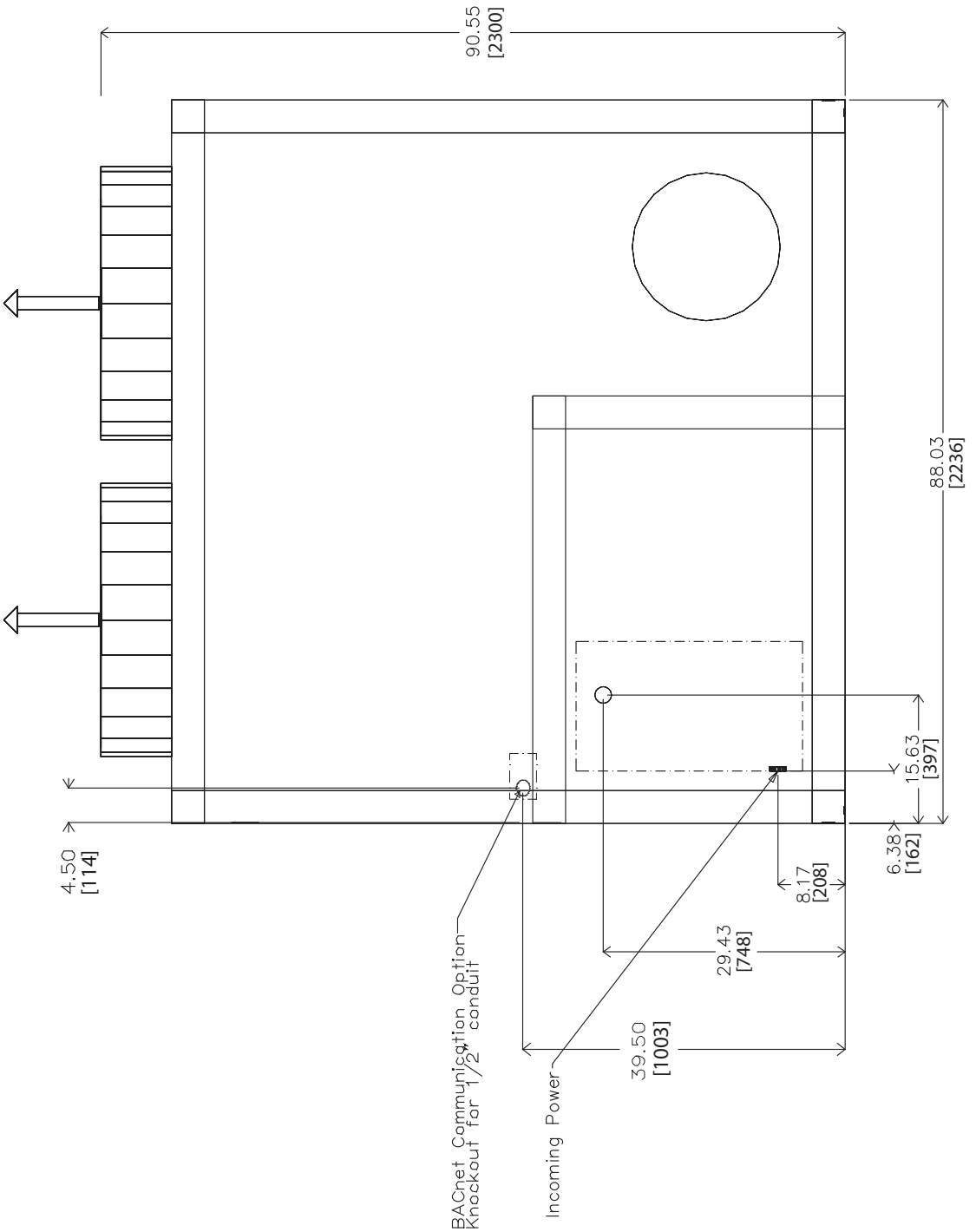

LEFT END VIEW

30XA220,240 (cont)

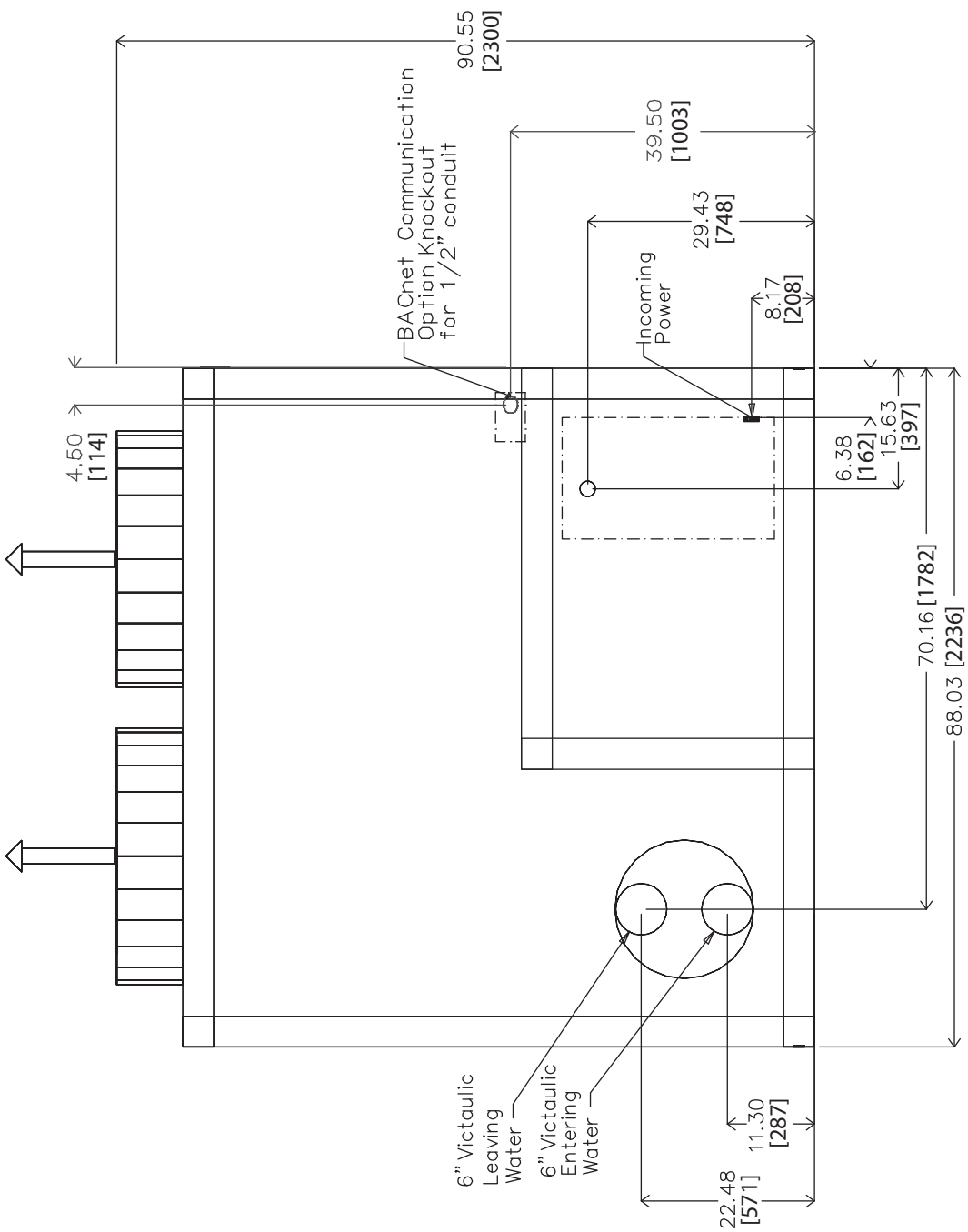

RIGHT END VIEW

Dimensions (cont)

30XA220,240 (cont)

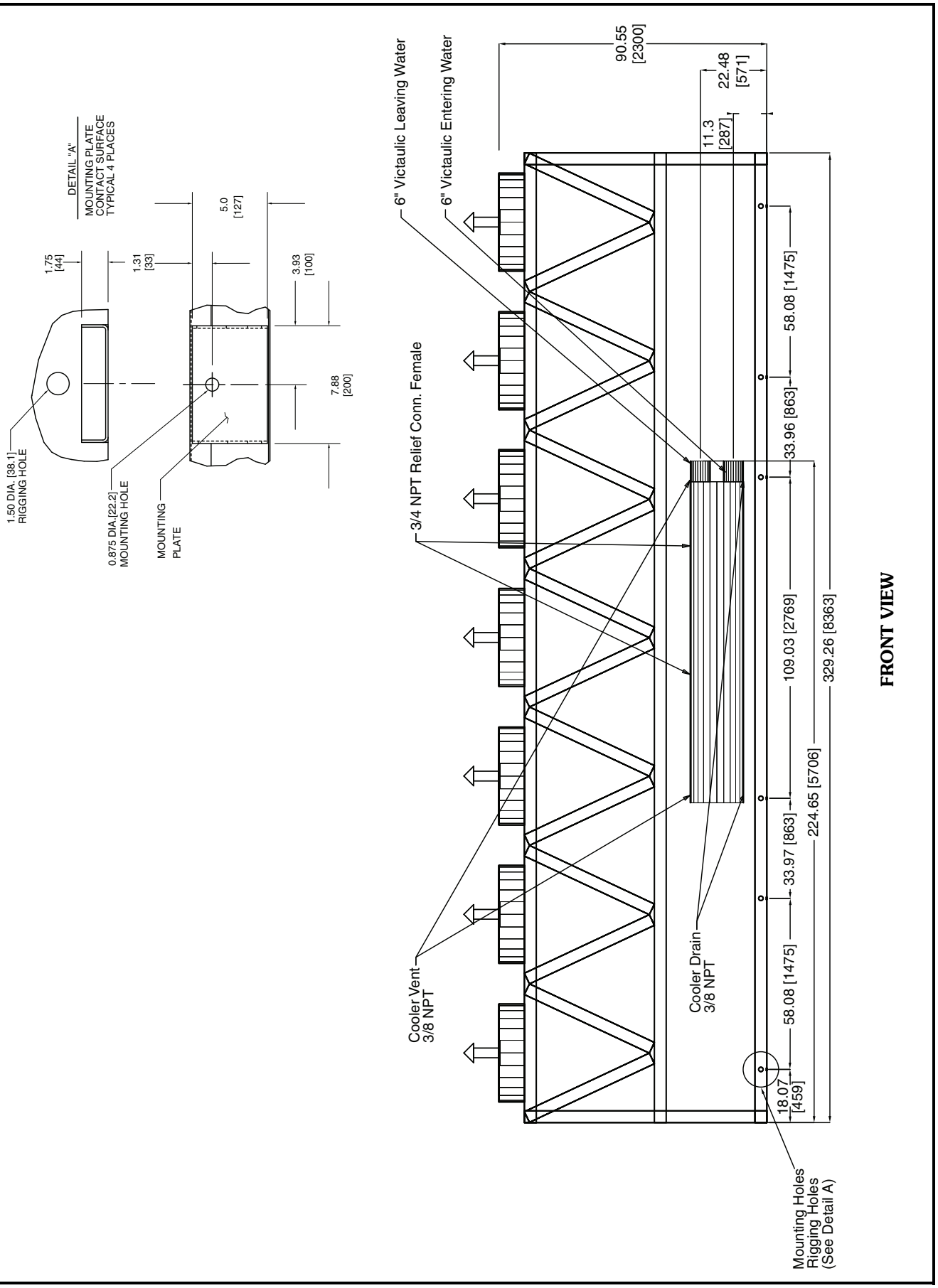

30XA220,240 (cont)

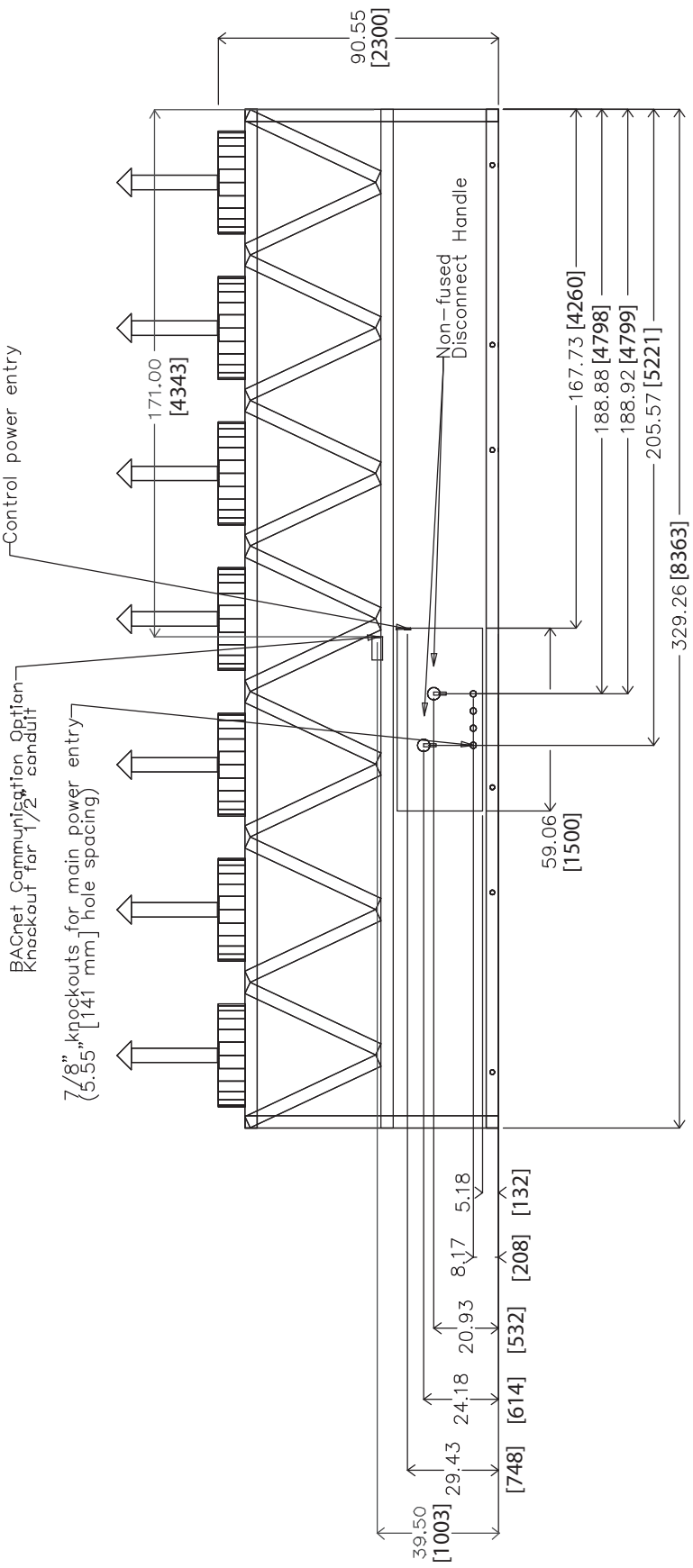

BACK VIEW

Dimensions (cont)

30XA260-300

30XA UNIT	A	B
260	44.22 [1123]	216.16 [5490]
280	44.30 [1125]	215.86 [5483]
300	44.32 [1126]	216.18 [5491]

NOTES:
1. Unit must have clearances as follows:
   Top — Do not restrict
   Sides and Ends — 6 ft (1.8 m) from solid surface.
2. Temperature relief devices are located on liquid line and economizer assemblies and have 1/4-in. flare connection.
3. 3/8-in. NPT vents and drains located in each cooler head at each end of cooler.
4. Drawing depicts unit with single point power and standard two-pass cooler. Refer to the Packaged Chiller Builder program for other configurations.
5. Dimensions are shown in inches. Dimensions in [ ] are in millimeters.

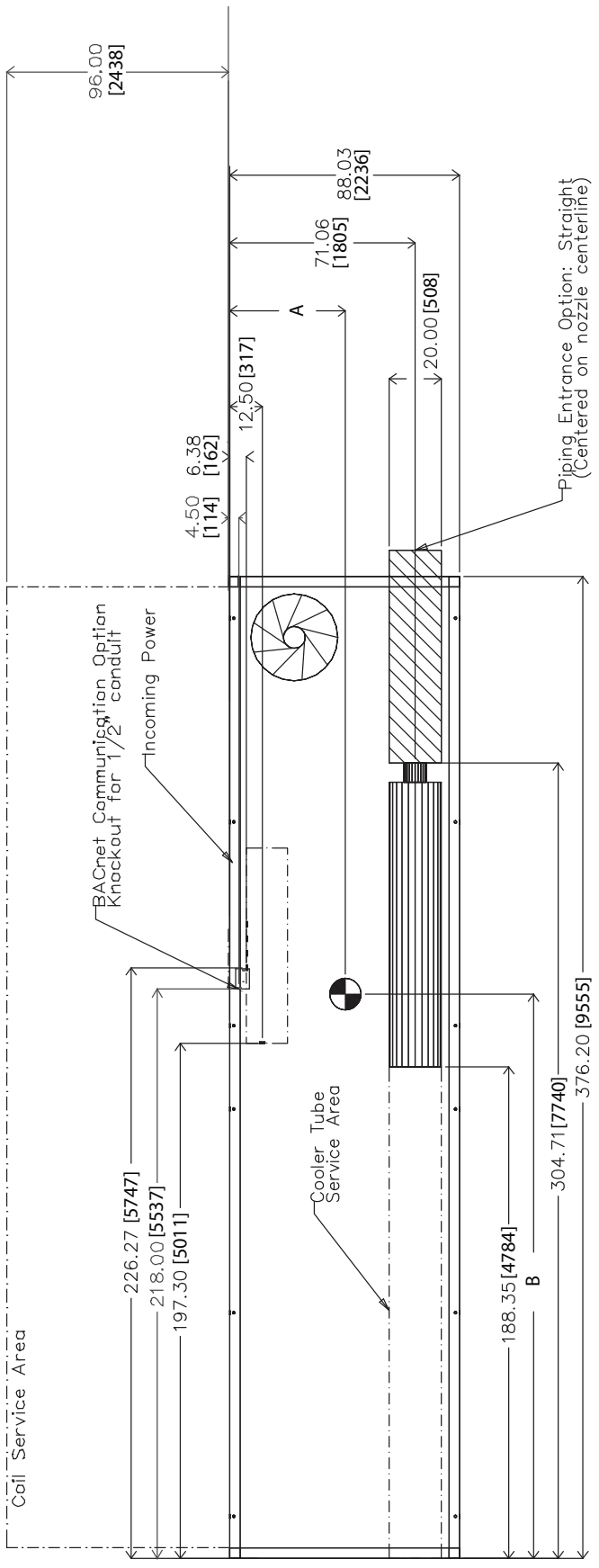

TOP VIEW

30XA260-300 (cont)

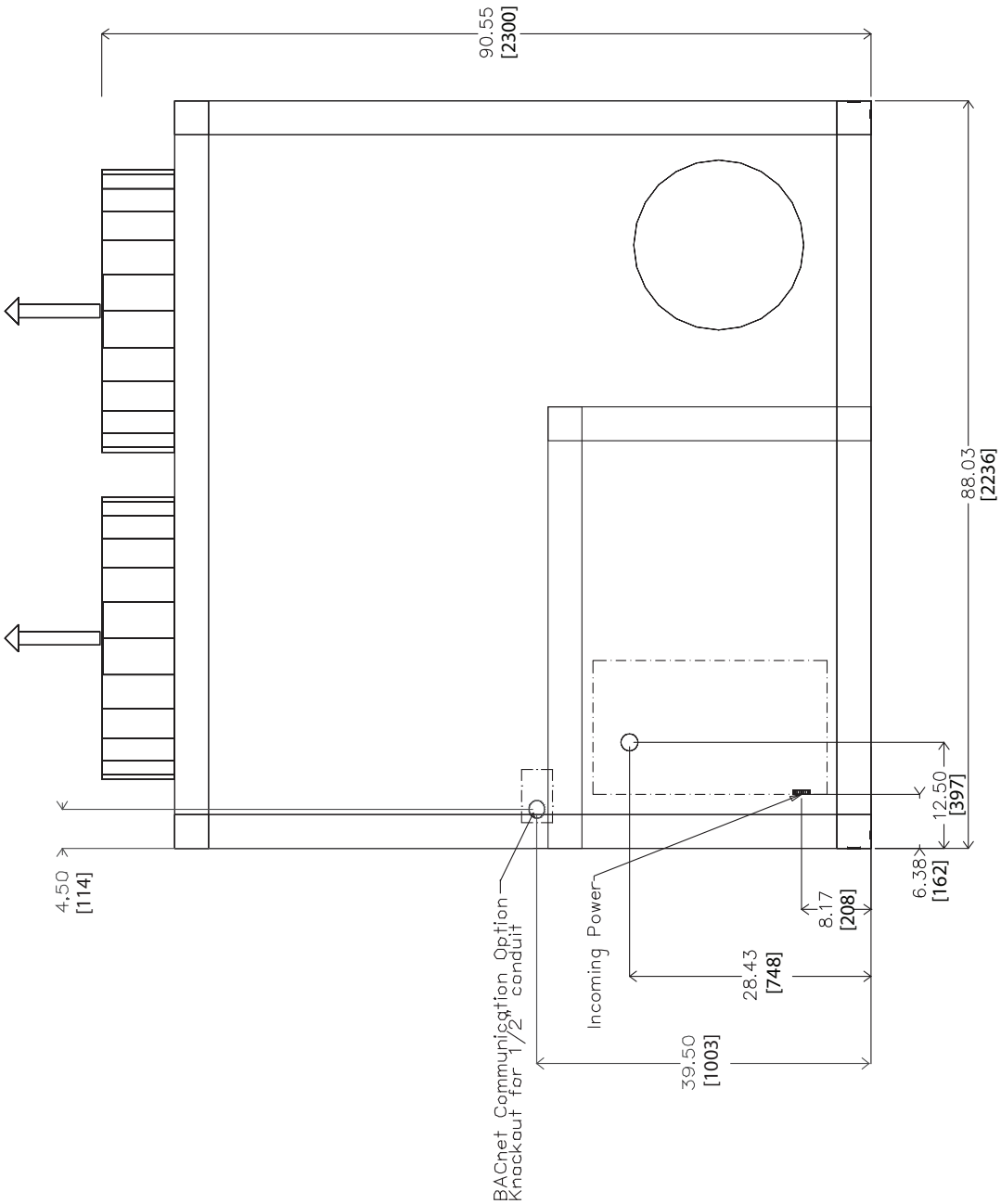

LEFT END VIEW

Dimensions (cont)

30XA260-300 (cont)

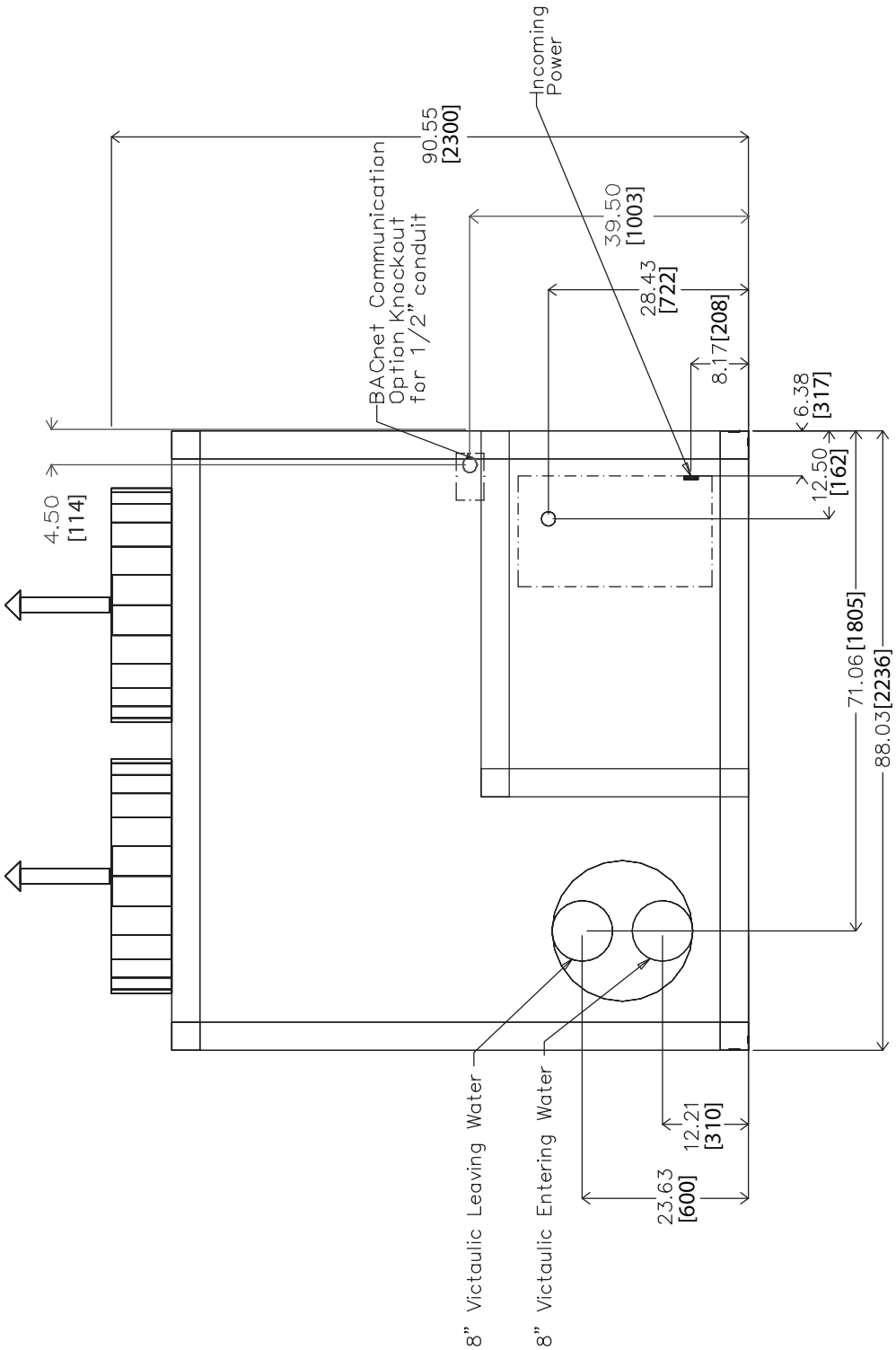

RIGHT END VIEW

30XA260-300 (cont)

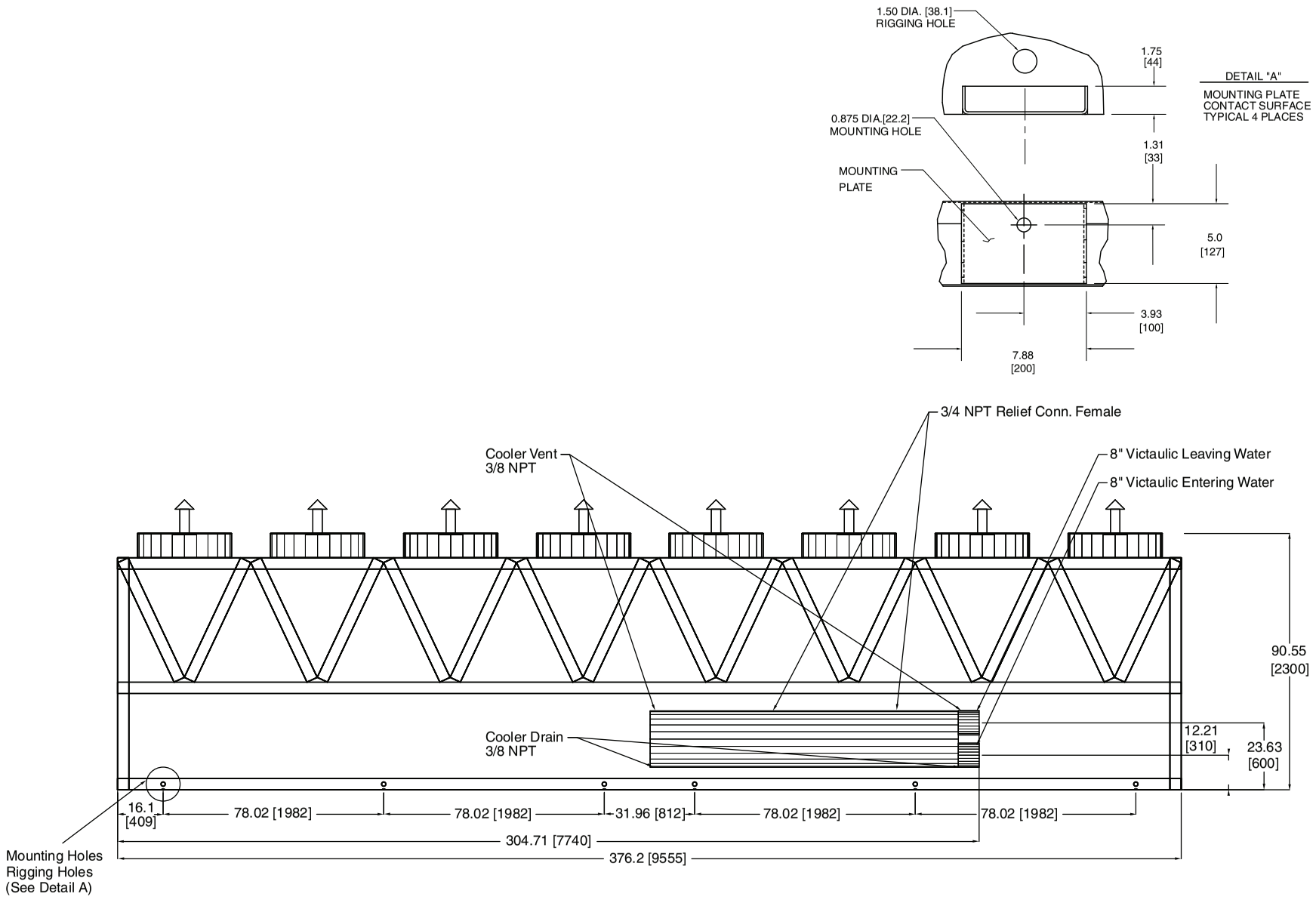

FRONT VIEW

Dimensions (cont)

30XA260-300 (cont)

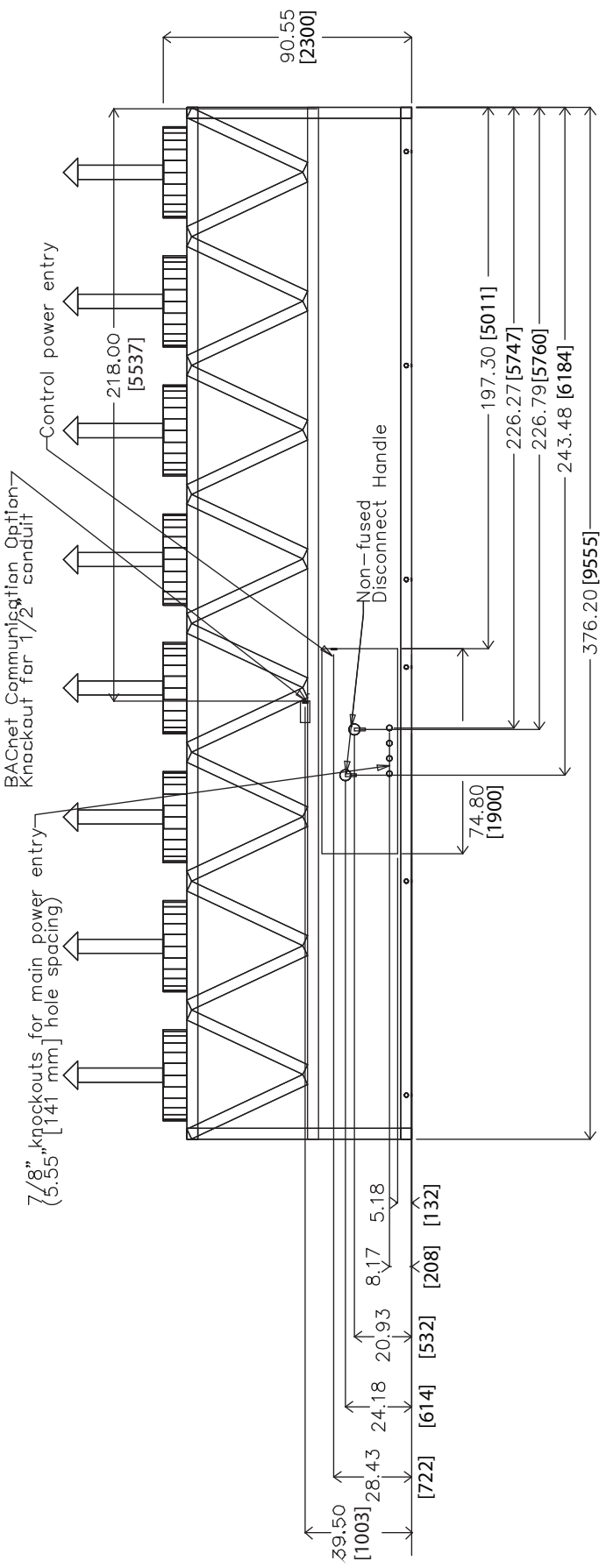

BACK VIEW

30XA325,350

NOTES:
1. Unit must have clearances as follows:
   Top — Do not restrict
   Sides and Ends — 6 ft (1.8 m) from solid surface.
2. Temperature relief devices are located on liquid line and economizer assemblies and have 1/4-in. flare connection.
3. 3/8-in. NPT vents and drains located in each cooler head at each end of cooler.
4. Drawing depicts unit with single point power and standard two-pass cooler. Refer to the Packaged Chiller Builder program for other configurations.
5. Dimensions are shown in inches. Dimensions in [ ] are in millimeters.

30XA UNIT	A	B
325	42.92 [1090]	246.16 [6252]
350	42.92 [1090]	246.72 [6267]

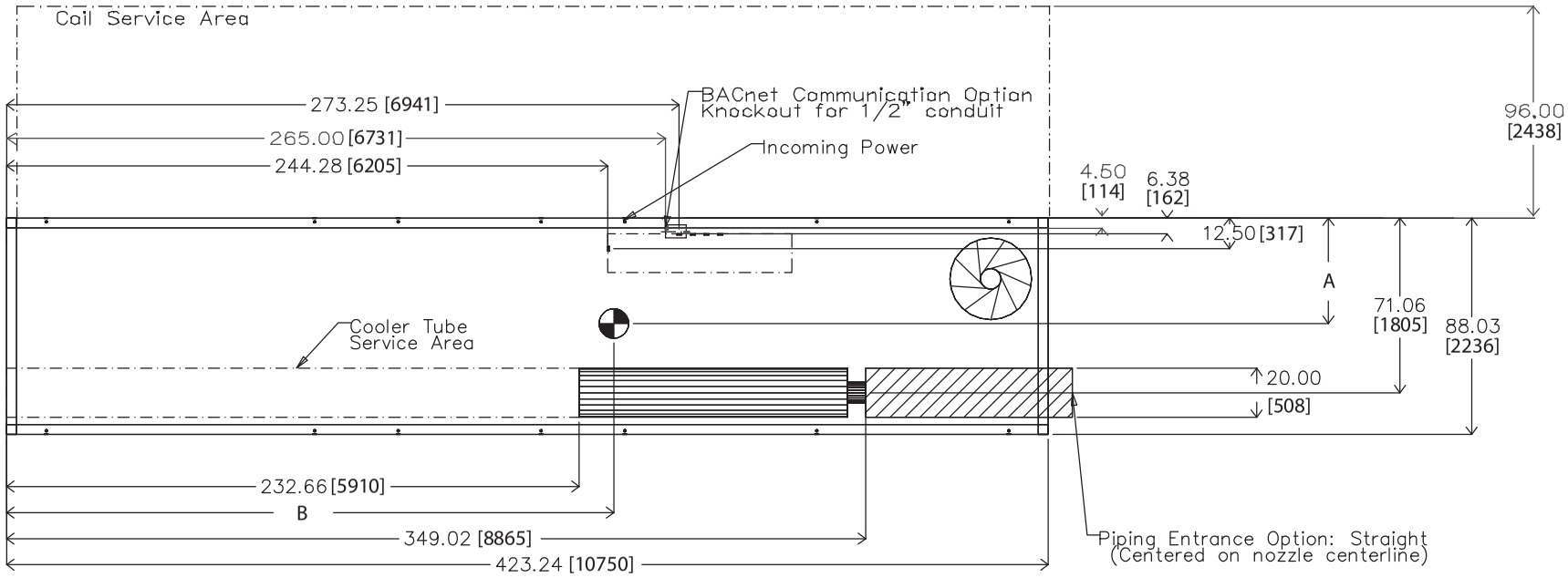

TOP VIEW

Dimensions (cont)

30XA325,350 (cont)

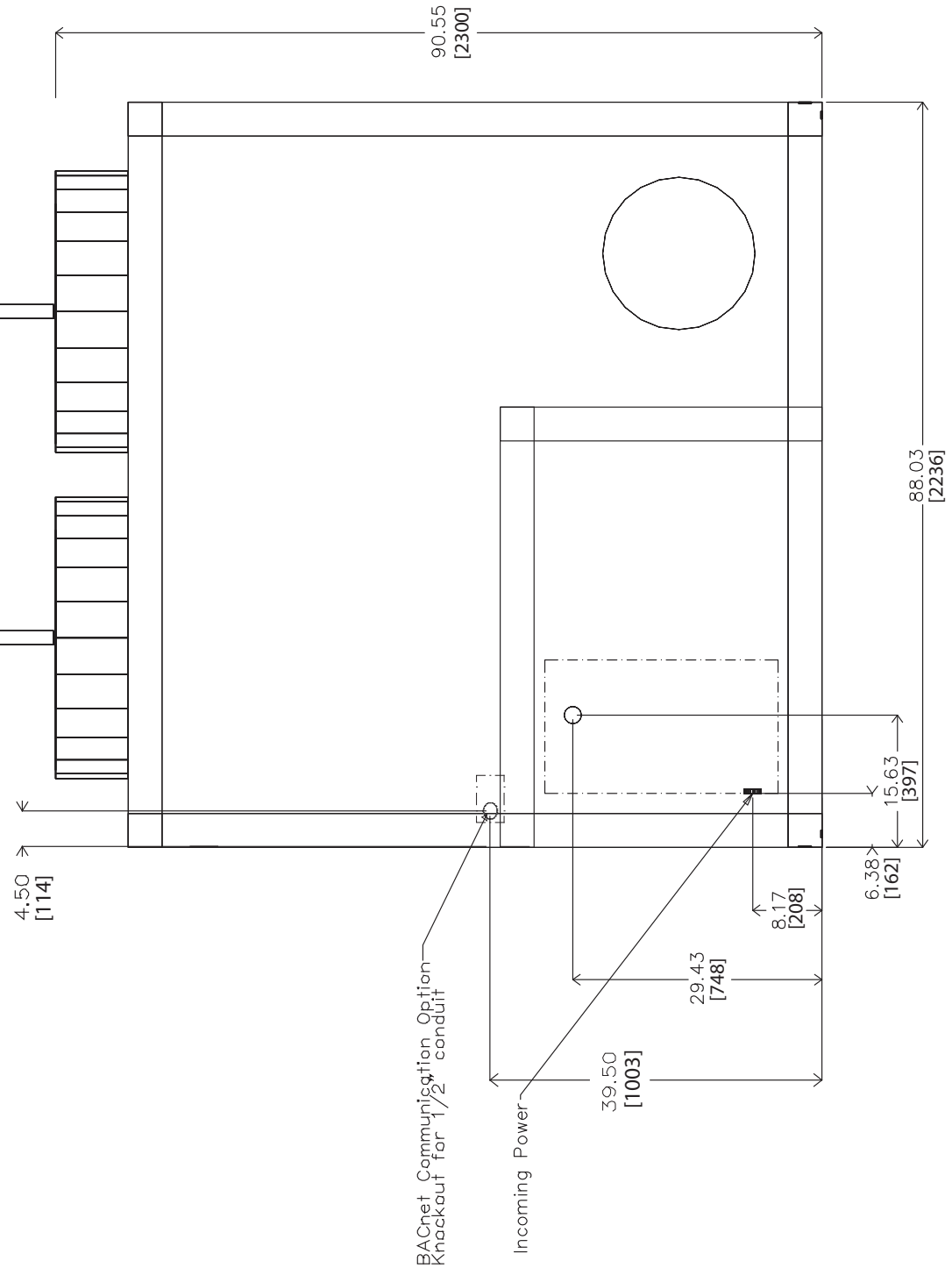

LEFT END VIEW

30XA325,350 (cont)

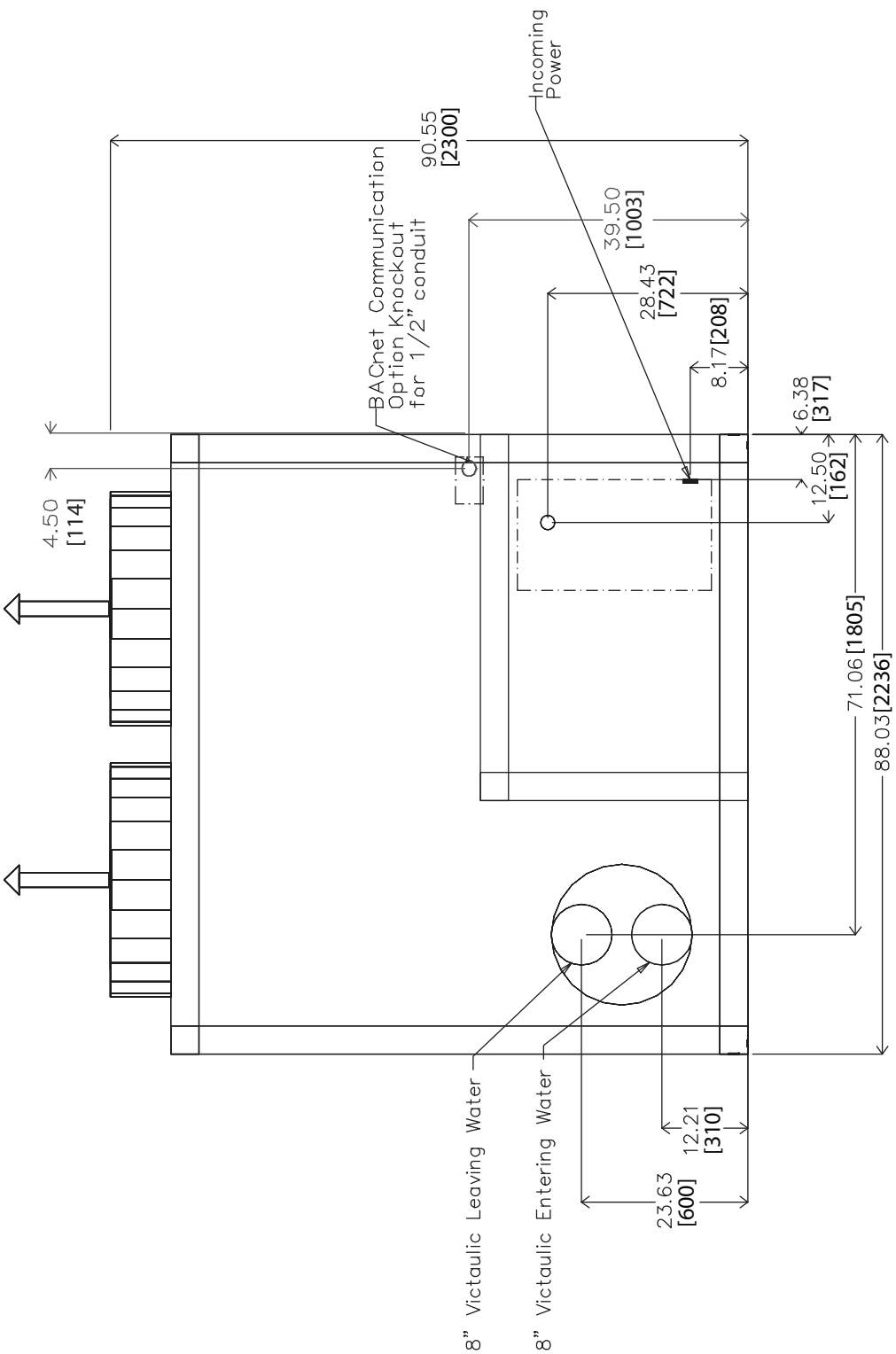

RIGHT END VIEW

Dimensions (cont)

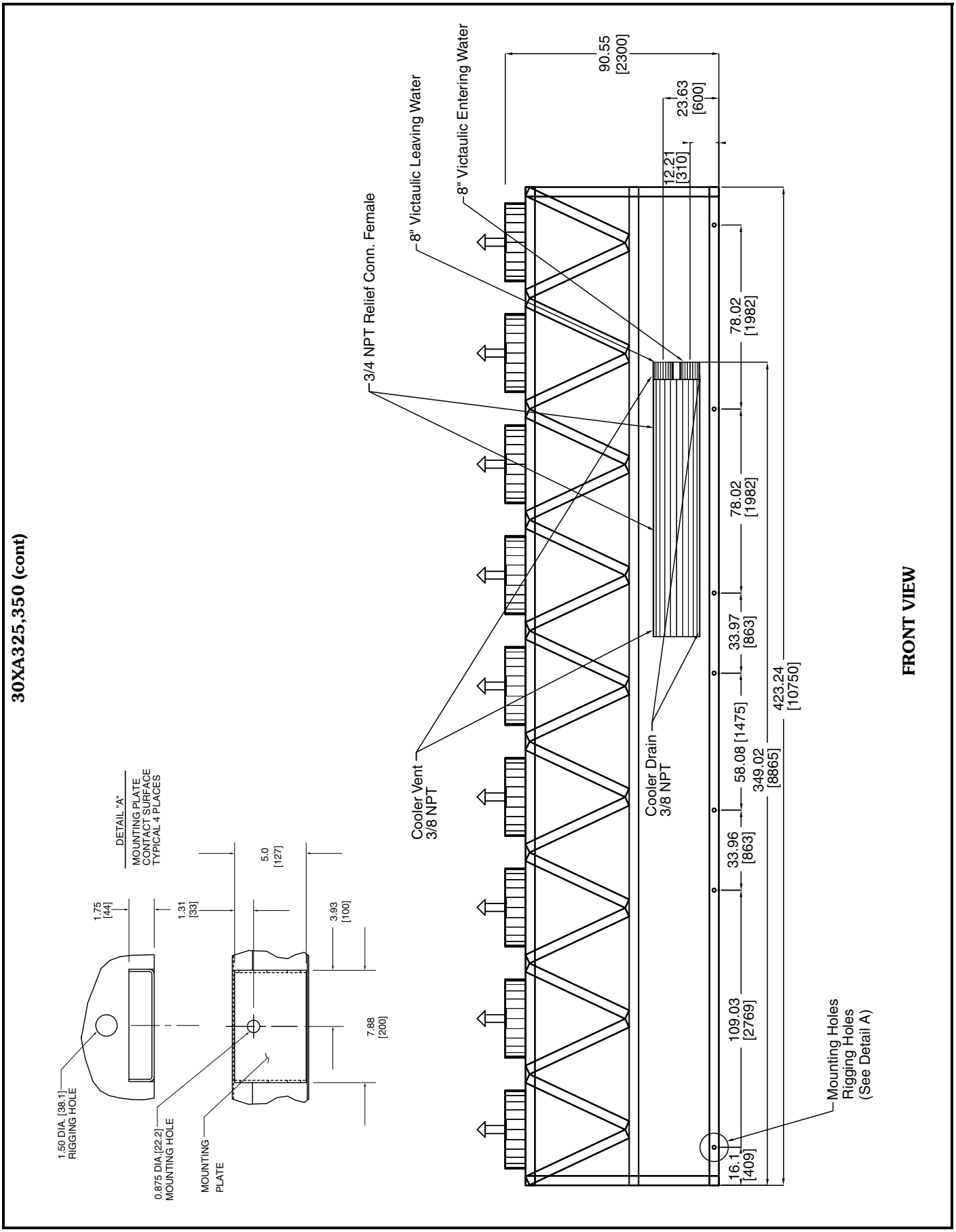

30XA325,350 (cont)

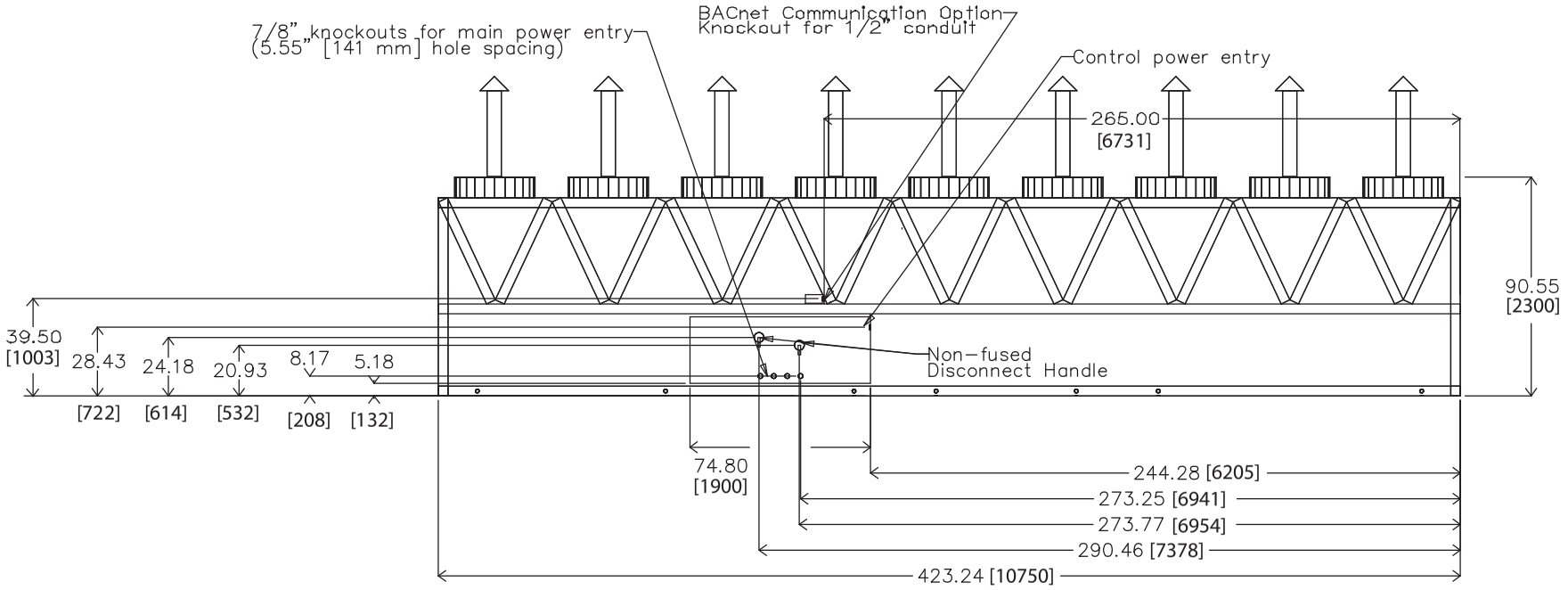

BACK VIEW

Dimensions (cont)

30XA400 SINGLE POINT

NOTES:
1. Unit must have clearances as follows:
   Top — Do not restrict
   Sides and Ends — 6 ft (1.8 m) from solid surface.
2. Temperature relief devices are located on liquid line and economizer assemblies and have 1/4-in. flare connection.
3. 3/8-in. NPT vents and drains located in each cooler head at each end of cooler.
4. Drawing depicts unit with single point power and standard one-pass cooler. Refer to the Packaged Chiller Builder program for other configurations.
5. Actual cooler consists of two separate coolers piped in series at the factory. Piping may be split for rigging.
6. Dimensions are shown in inches. Dimensions in [ ] are in millimeters.

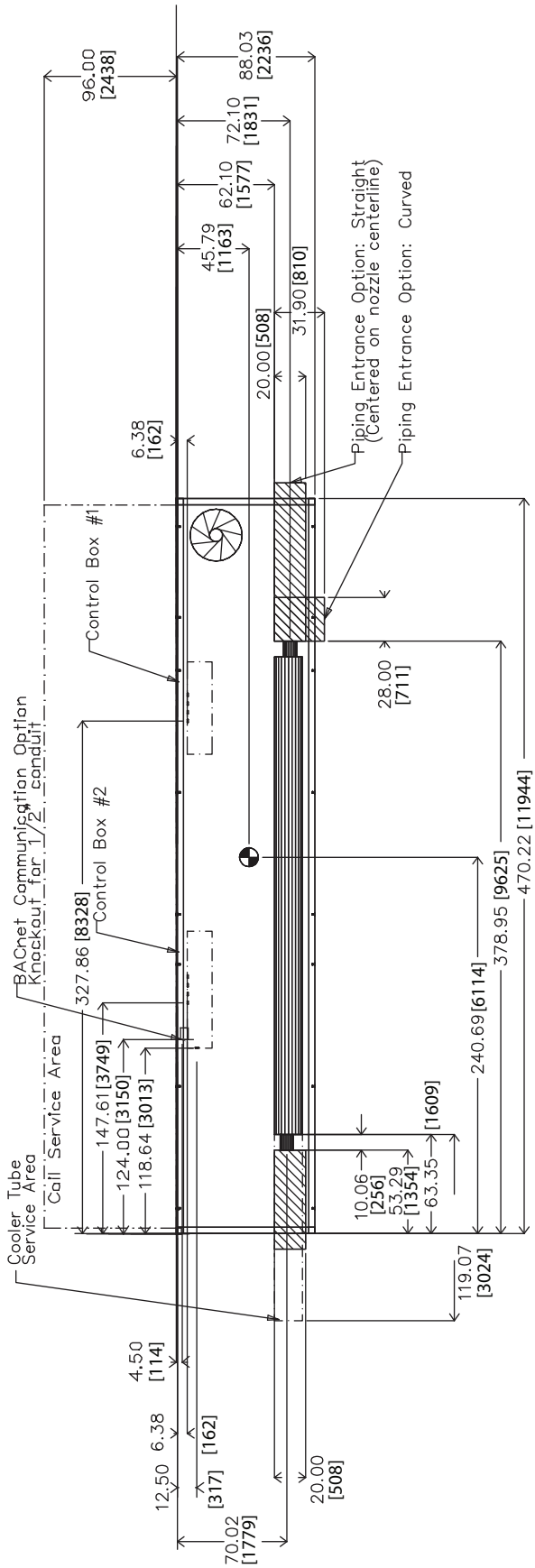

TOP VIEW

30XA400 SINGLE POINT (cont)

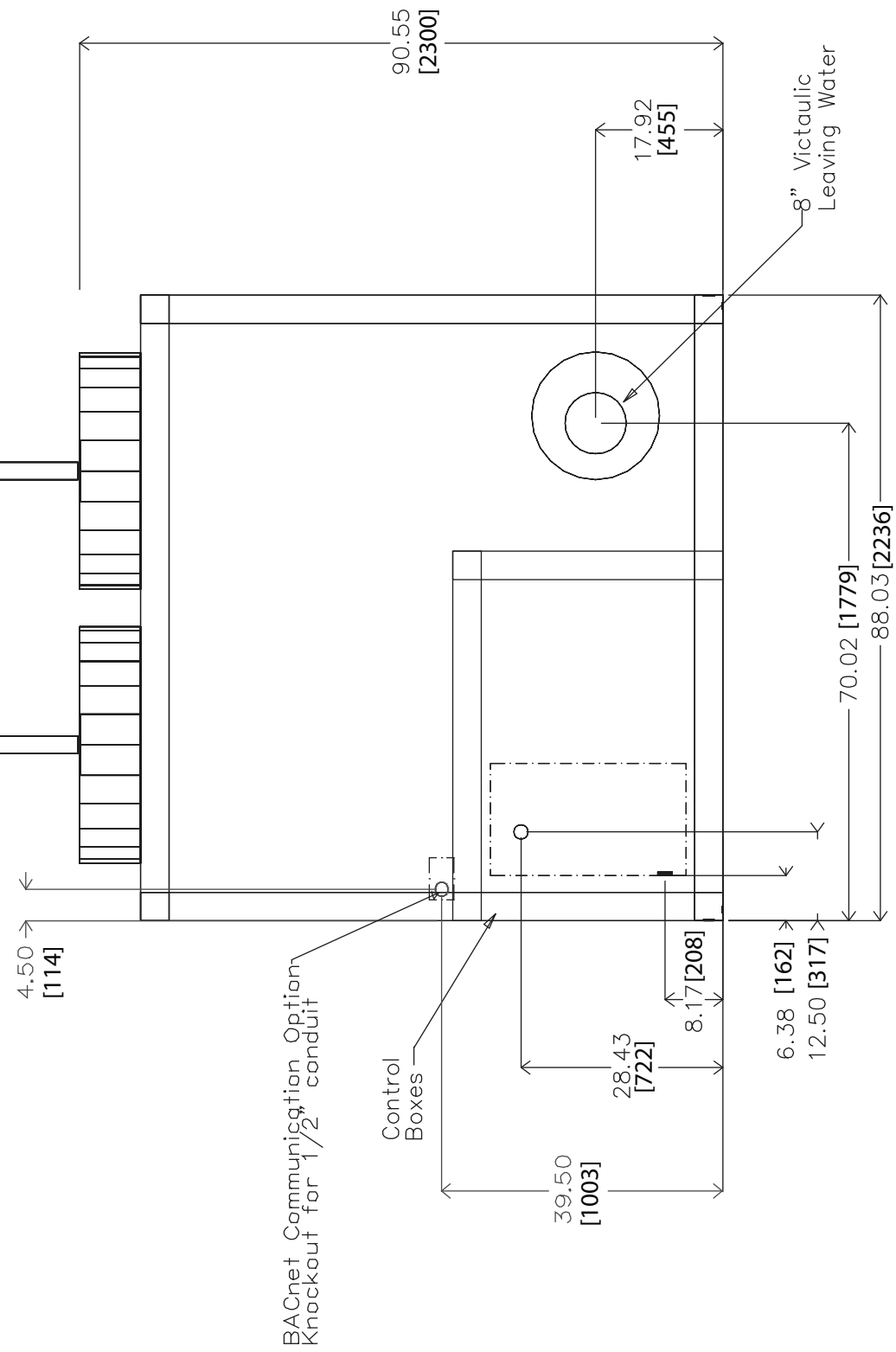

LEFT END VIEW

Dimensions (cont)

30XA400 SINGLE POINT (cont)

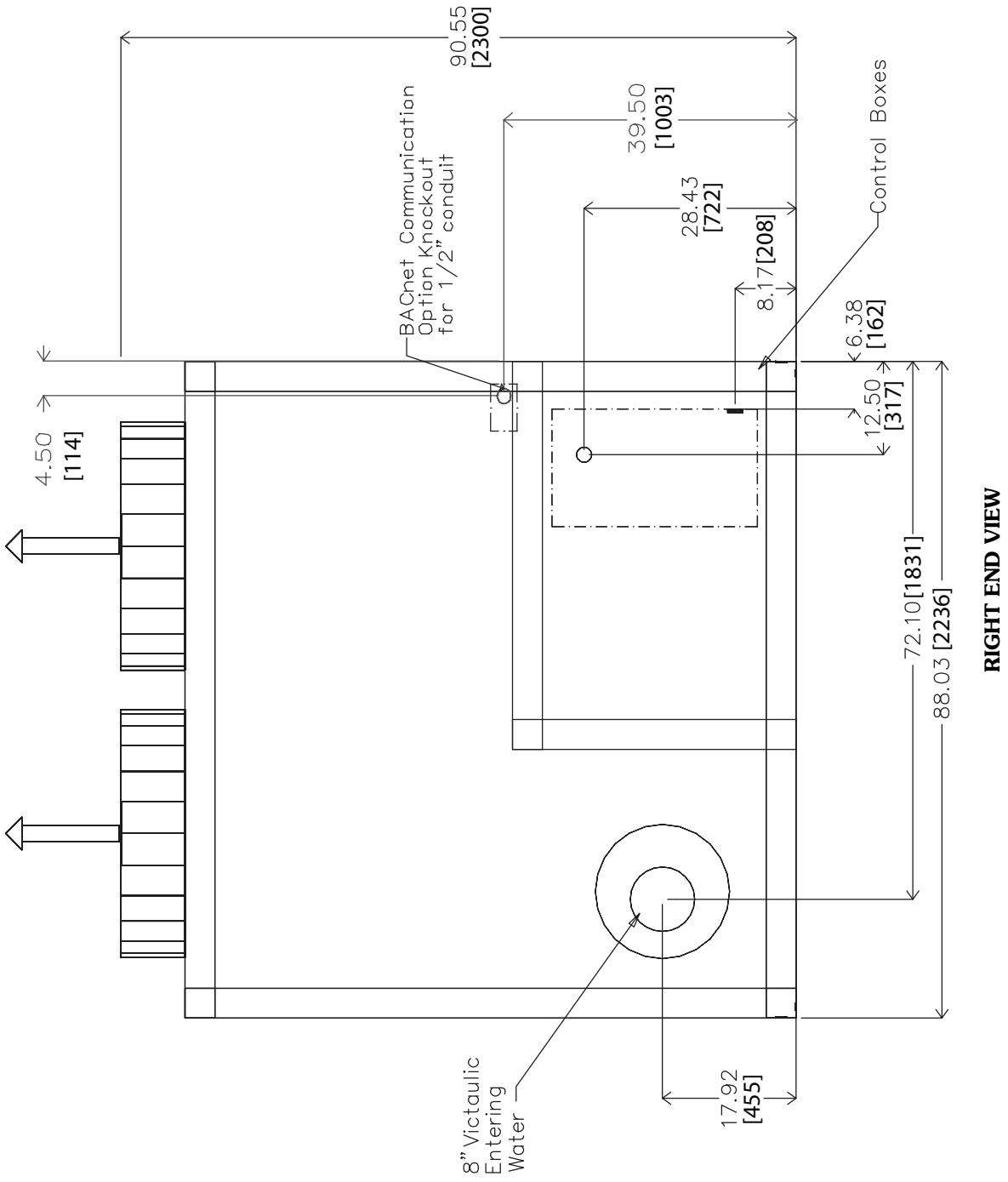

RIGHT END VIEW

30XA400 SINGLE POINT (cont)

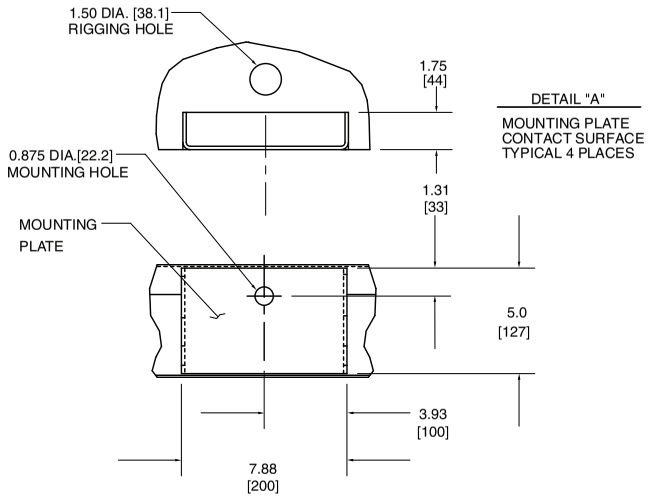

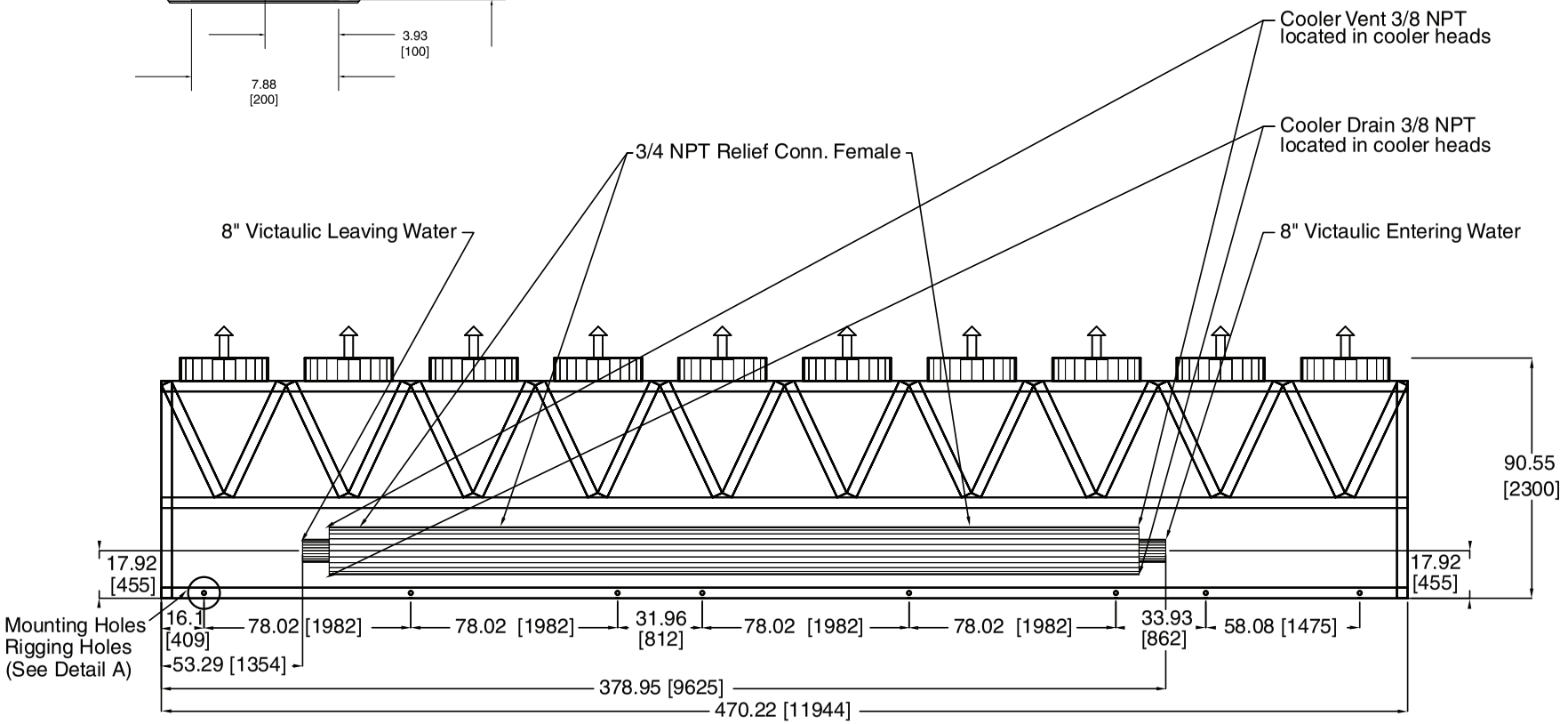

FRONT VIEW

Dimensions (cont)

30XA400 SINGLE POINT (cont)

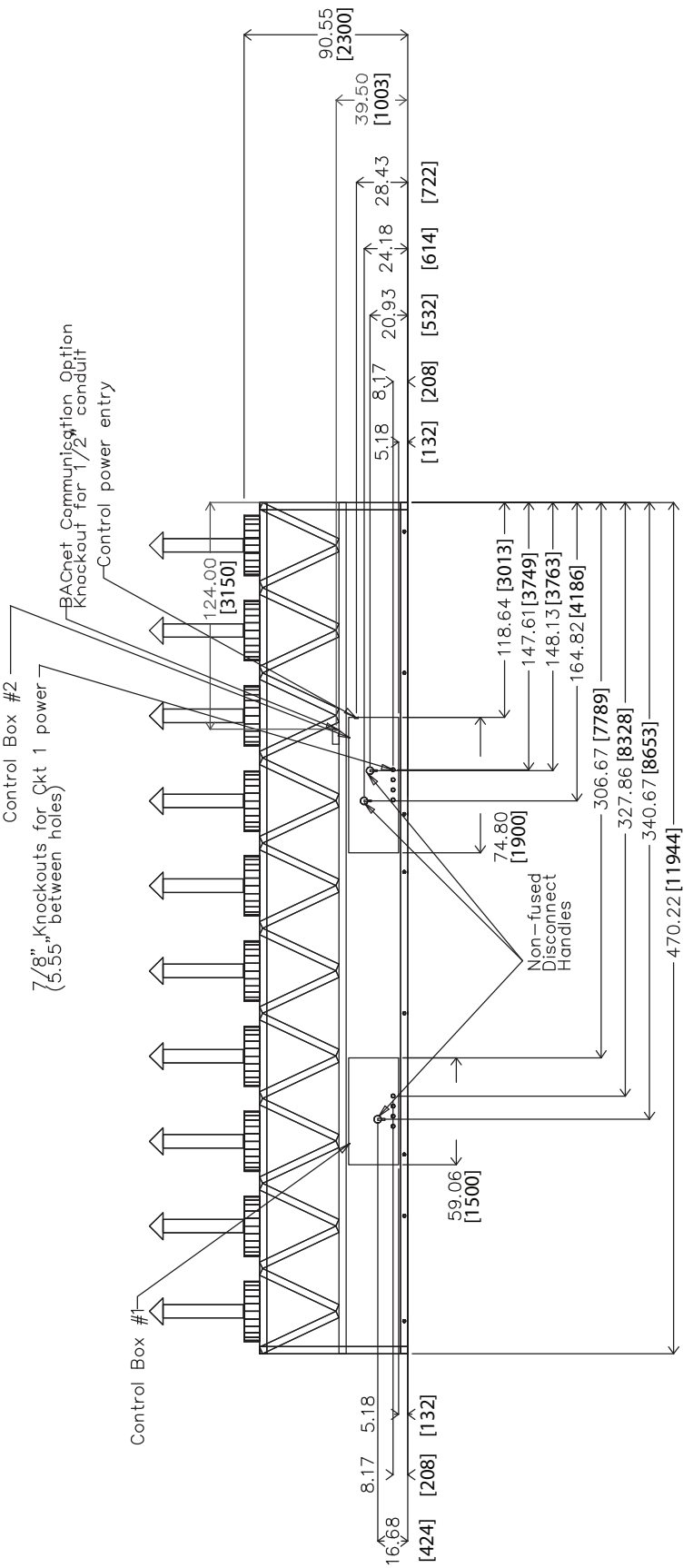

BACK VIEW

30XA400 DUAL POINT

NOTES:
1. Unit must have clearances as follows:
   Top — Do not restrict
   Sides and Ends — 6 ft (1.8 m) from solid surface.
2. Temperature relief devices are located on liquid line and economizer assemblies and have 1/4-in. flare connection.
3. 3/8-in. NPT vents and drains located in each cooler head at each end of cooler.
4. Drawing depicts unit with dual-point power and standard one-pass cooler. Refer to the Packaged Chiller Builder program for other configurations.
5. Actual cooler consists of two separate coolers piped in series at the factory. Piping may be split for rigging.
6. Dimensions are shown in inches. Dimensions in [ ] are in millimeters.

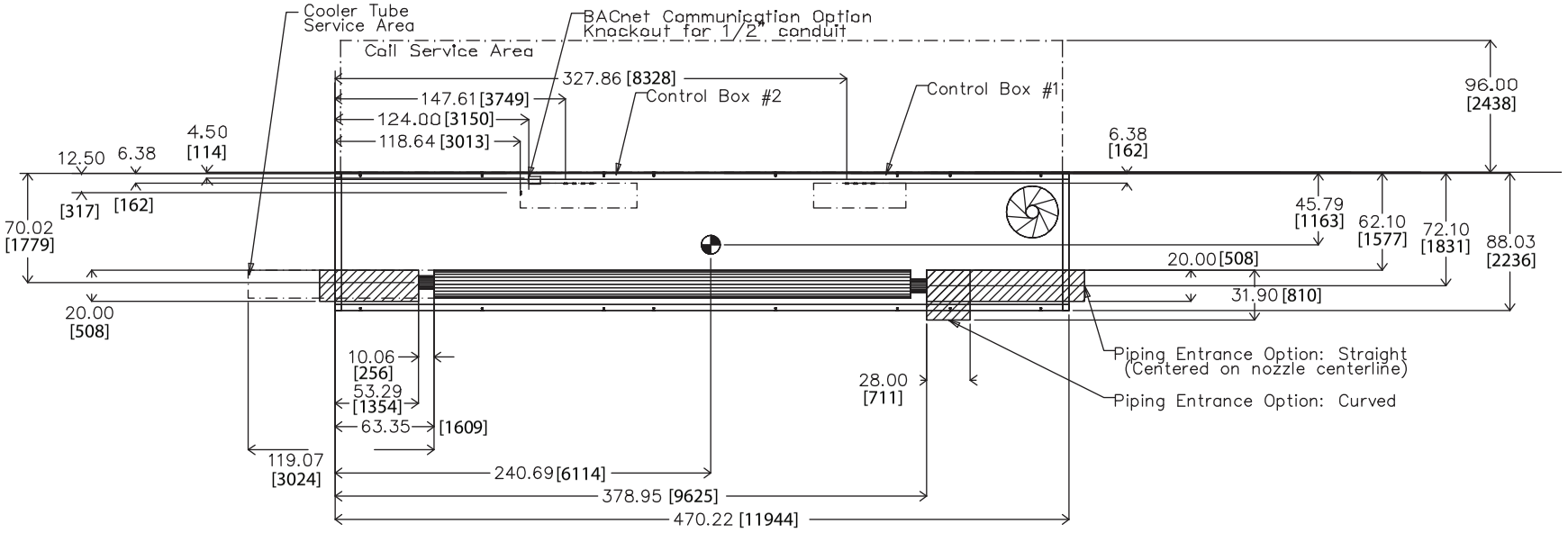

TOP VIEW

Dimensions (cont)

30XA400 DUAL POINT (cont)

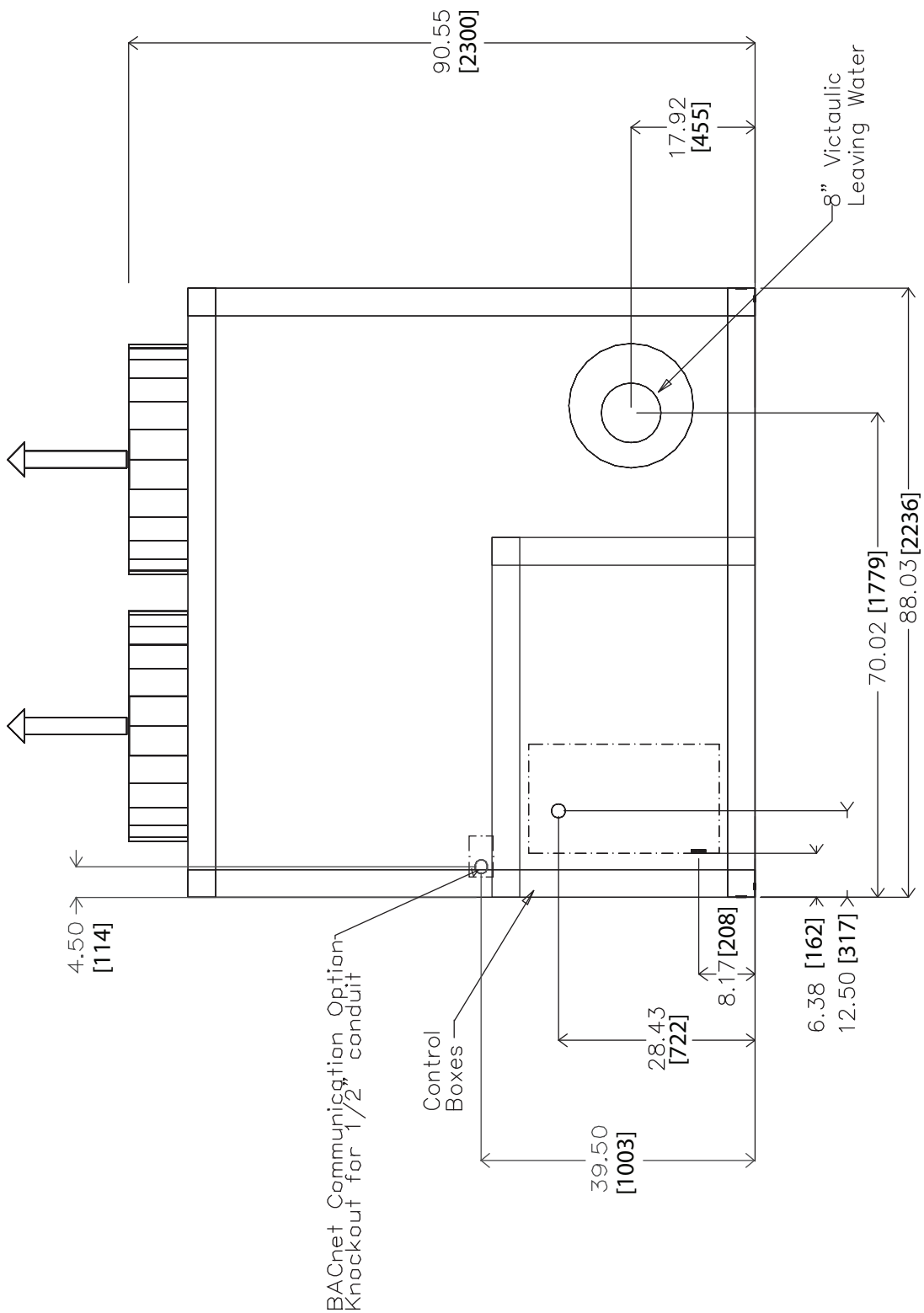

LEFT END VIEW

30XA400 DUAL POINT (cont)

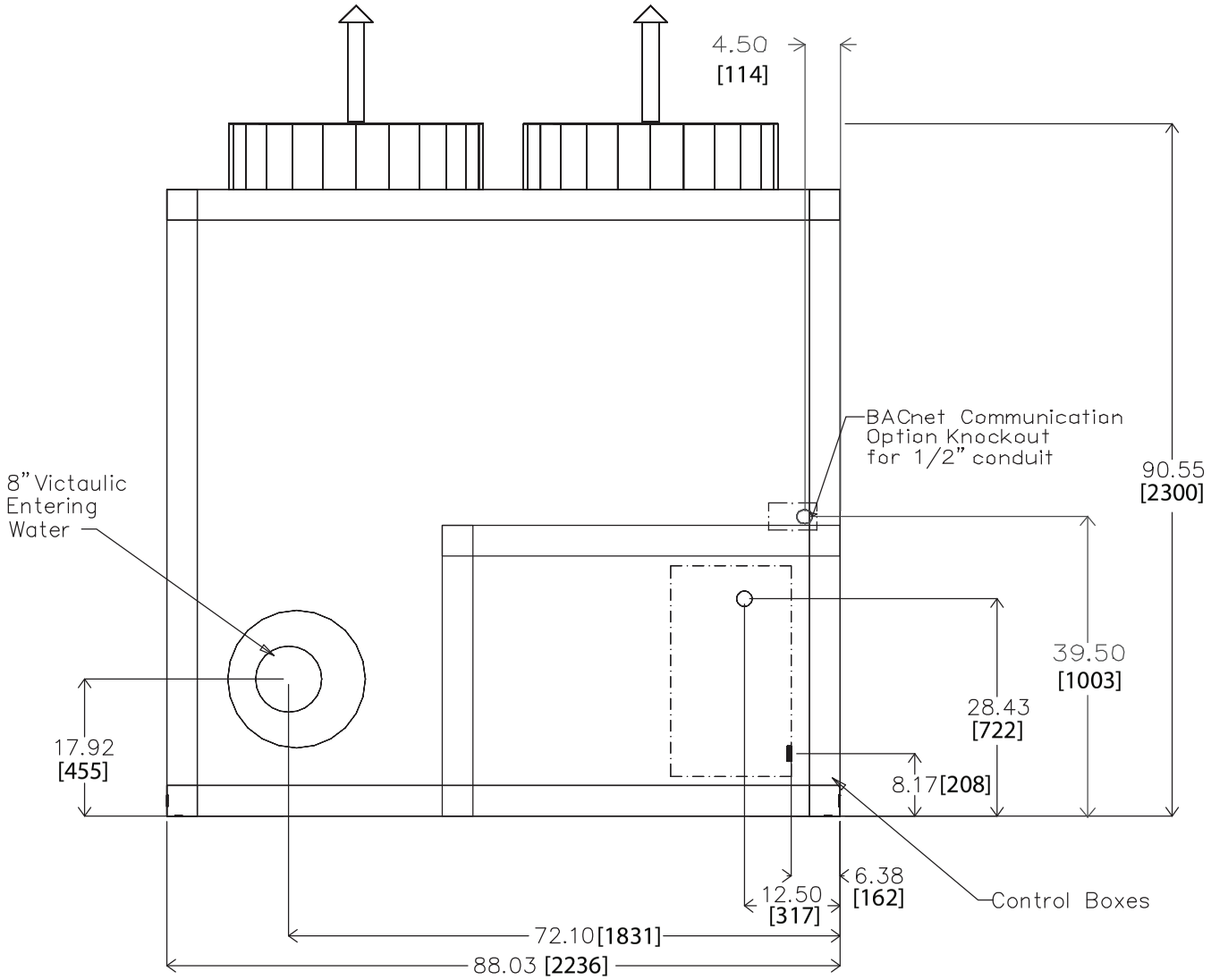

RIGHT END VIEW

Dimensions (cont)

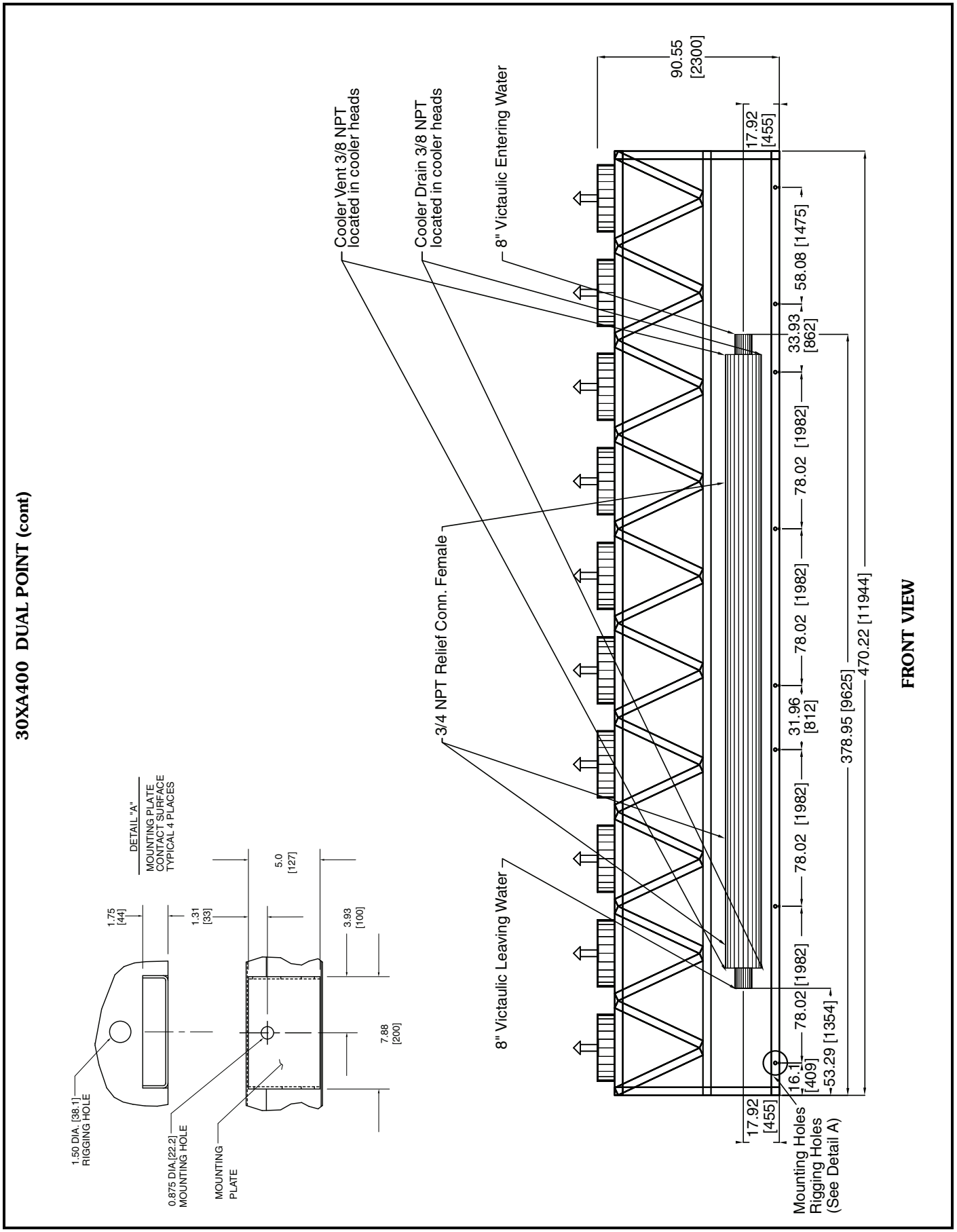

30XA400 DUAL POINT (cont)

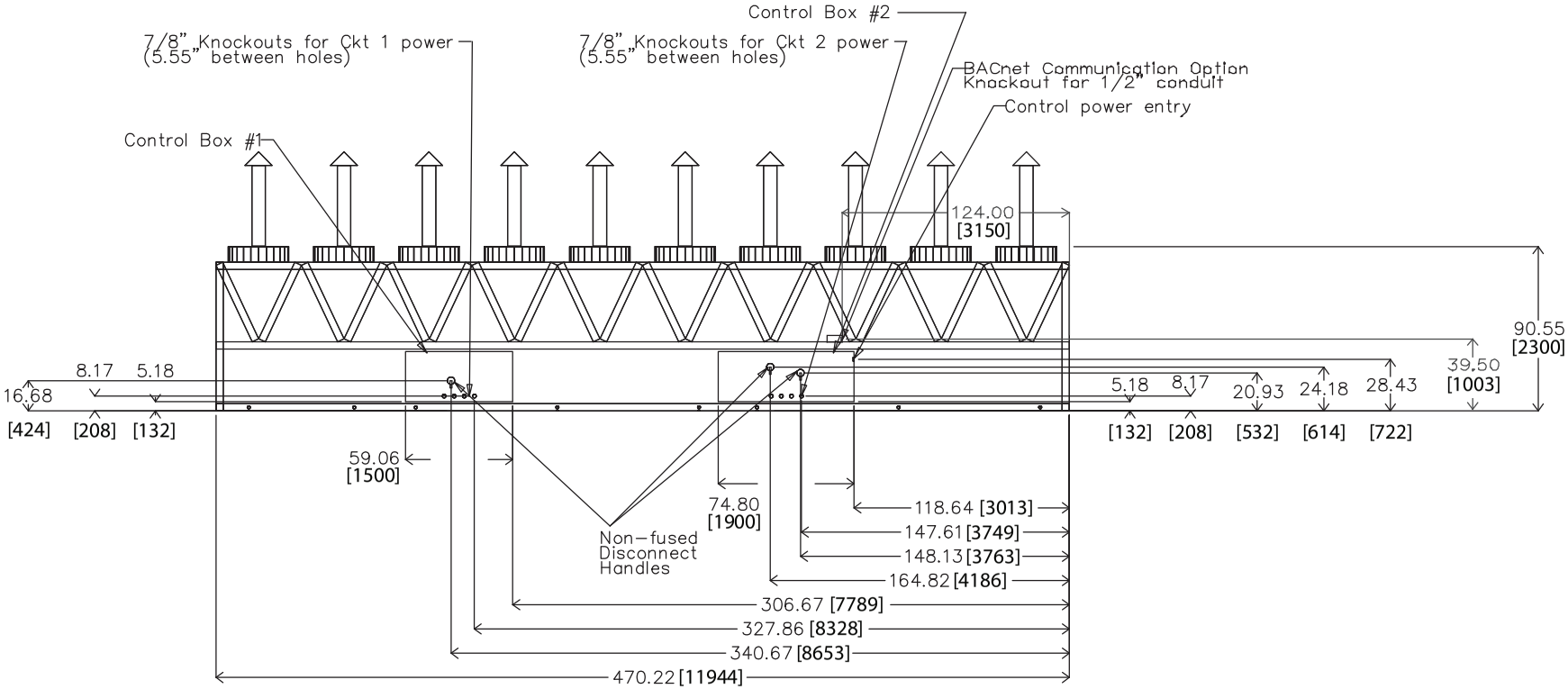

BACK VIEW

30XA450,500 SINGLE POINT

30XA UNIT	A	B
450	44.71 [1136]	264.7 [6723]
500	44.78 [1137]	263.99 [6705]

NOTES:
1. Unit must have clearances as follows:
   Top — Do not restrict
   Sides and Ends — 6 ft (1.8 m) from solid surface.
2. Temperature relief devices are located on liquid line and economizer assemblies and have 1/4-in. flare connection.
3. 3/8-in. NPT vents and drains located in each cooler head at each end of cooler.
4. Drawing depicts unit with single-point power and standard one-pass cooler. Refer to the Packaged Chiller Builder program for other configurations.
5. Actual cooler consists of two separate coolers piped in series at the factory. Piping may be split for rigging.
6. Dimensions are shown in inches. Dimensions in [ ] are in millimeters.

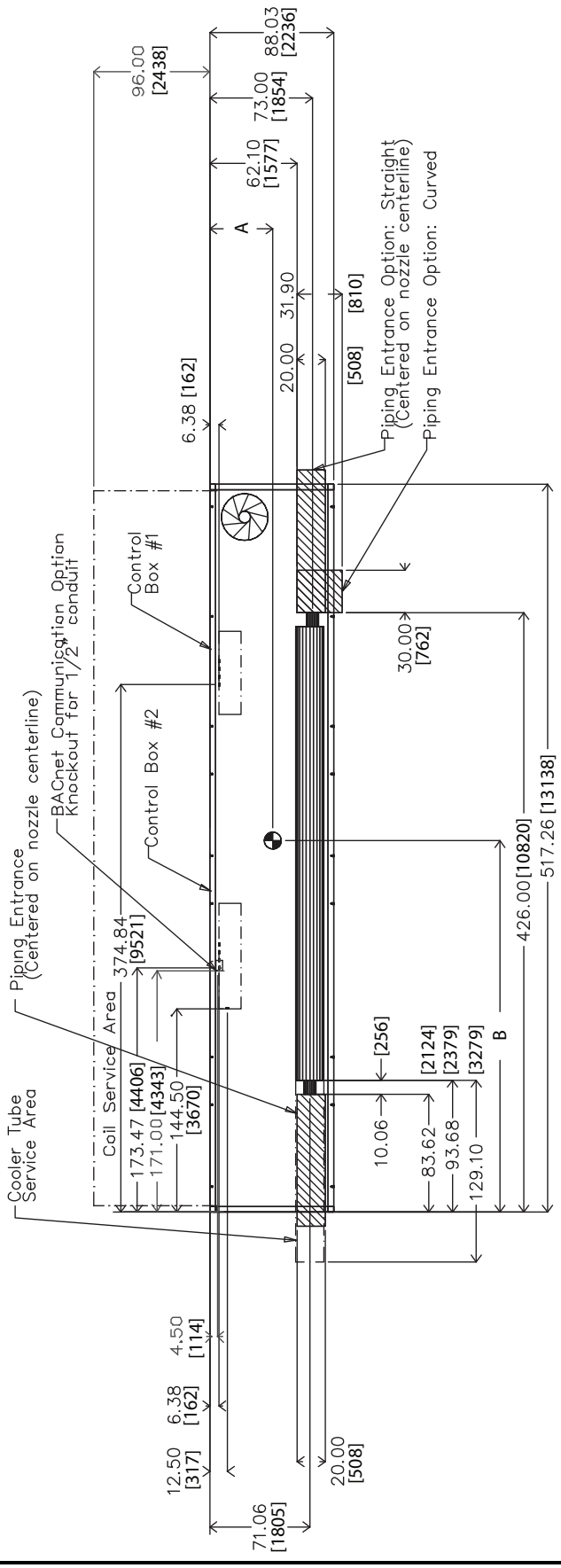

TOP VIEW

30XA450,500 SINGLE POINT

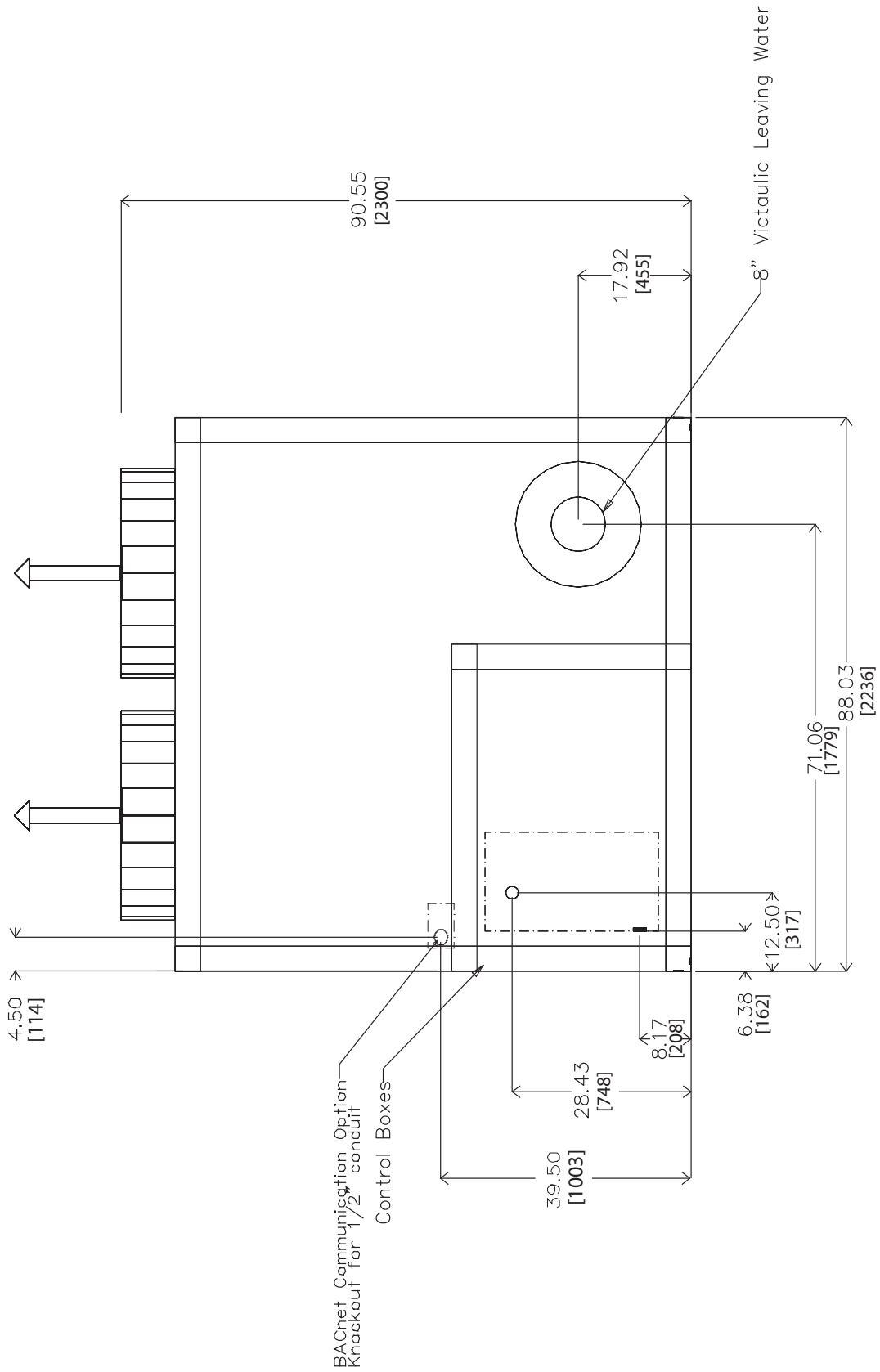

LEFT END VIEW

Dimensions (cont)

30XA450,500 SINGLE POINT

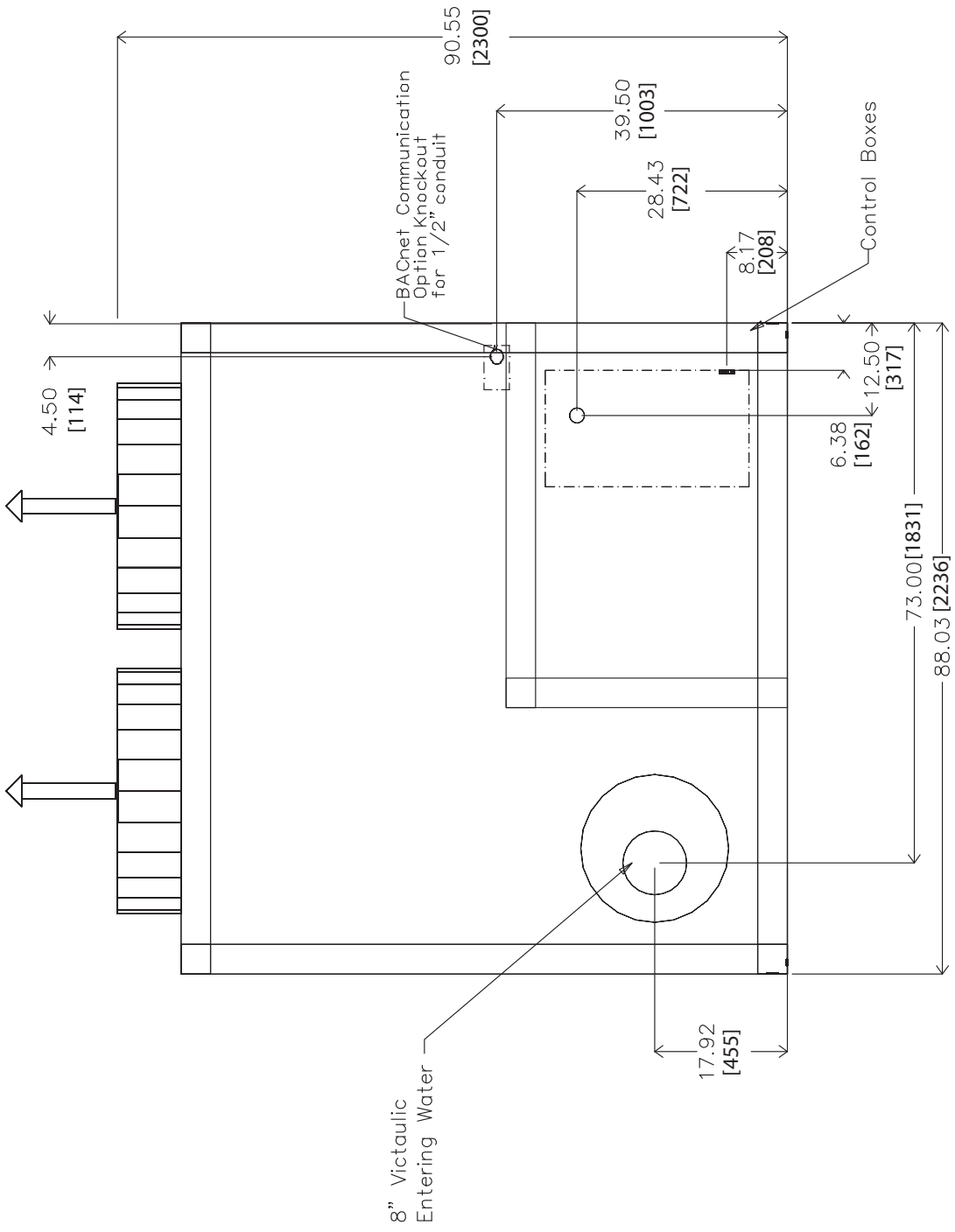

RIGHT END VIEW

30XA450,500 SINGLE POINT (cont)

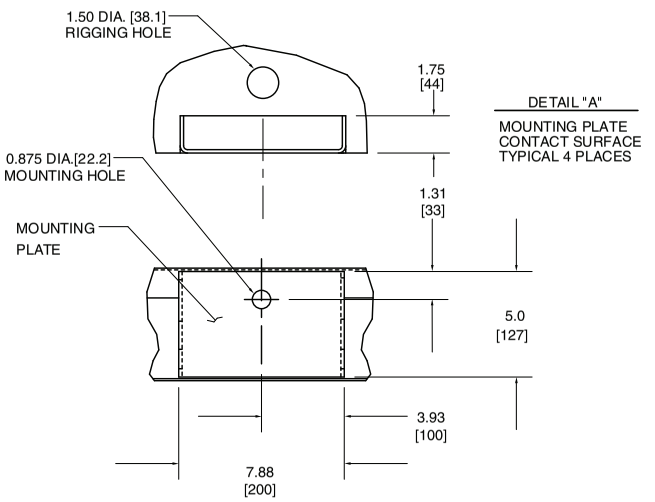

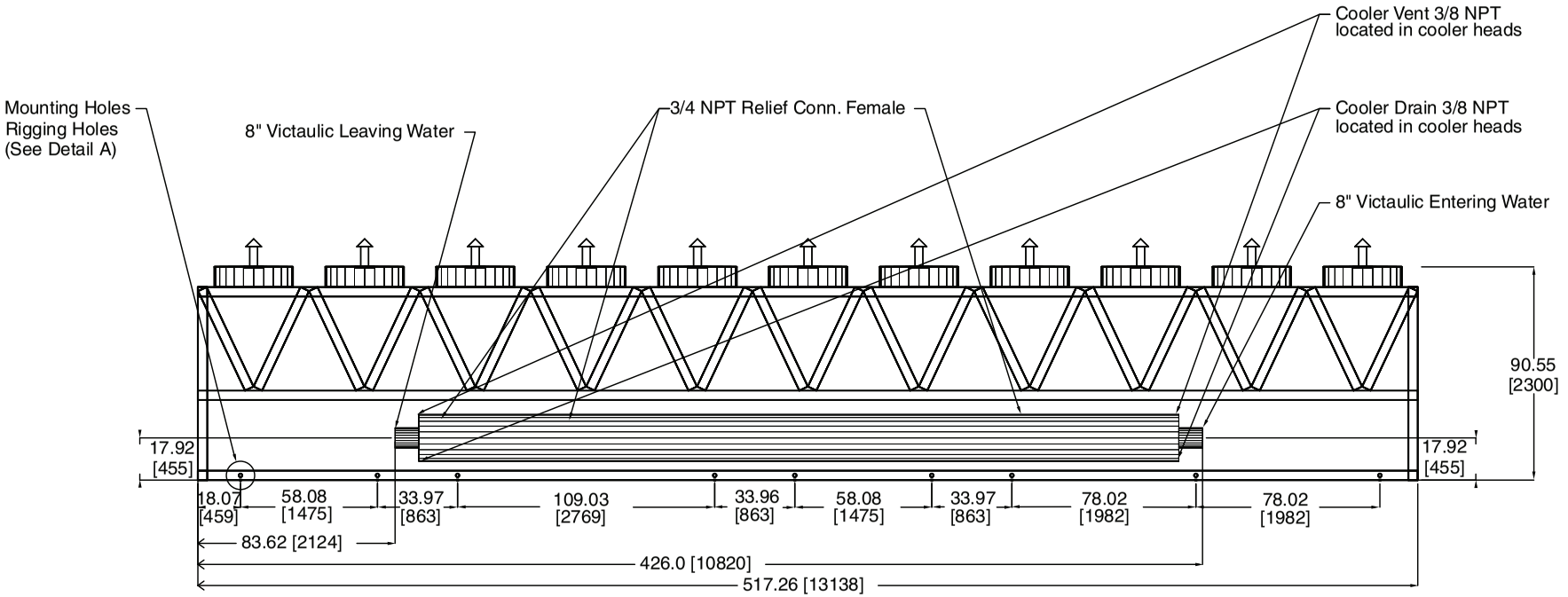

FRONT VIEW

Dimensions (cont)

30XA450,500 SINGLE POINT (cont)

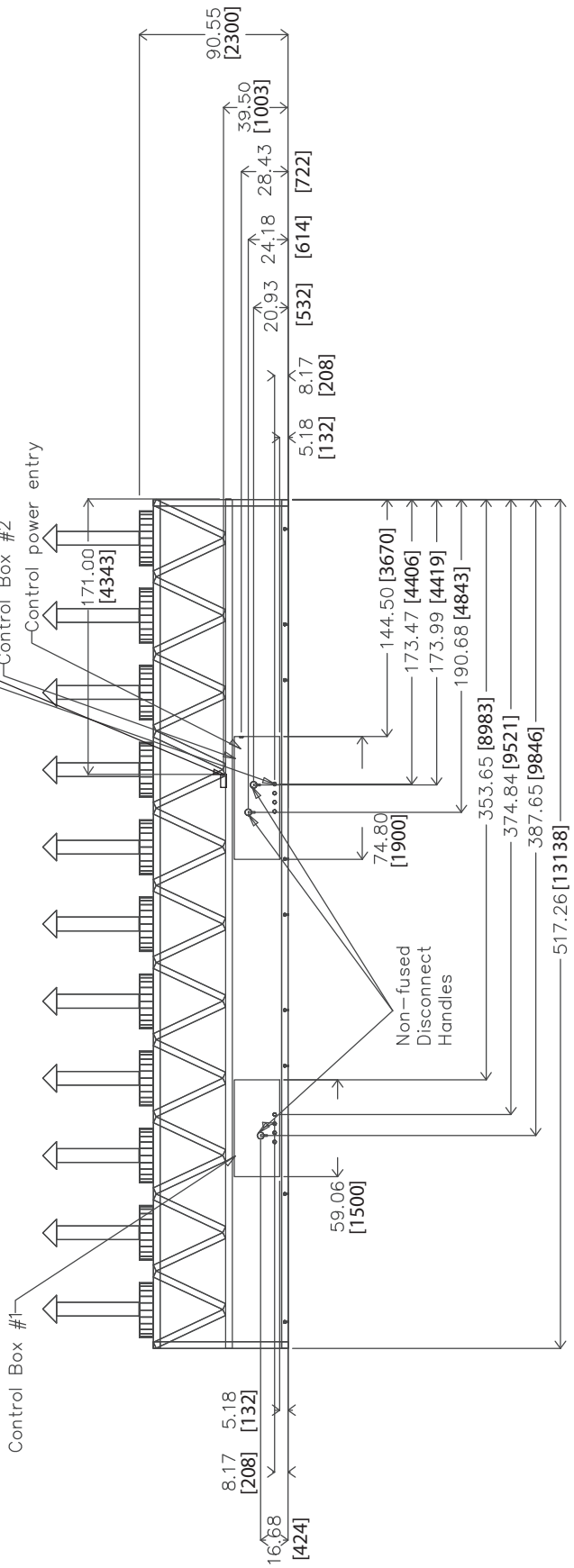

BACK VIEW

30XA450,500 DUAL POINT

NOTES:
1. Unit must have clearances as follows:
   Top — Do not restrict
   Sides and Ends — 6 ft (1.8 m) from solid surface.
2. Temperature relief devices are located on liquid line and economizer assemblies and have 1/4-in. flare connection.
3. 3/8-in. NPT vents and drains located in each cooler head at each end of cooler.
4. Drawing depicts unit with dual-point power and standard one-pass cooler. Refer to the Packaged Chiller Builder program for other configurations.
5. Actual cooler consists of two separate coolers piped in series at the factory. Piping may be split for rigging.
6. Dimensions are shown in inches. Dimensions in [ ] are in millimeters.

30XA UNIT	A	B
450	44.71 [1136]	264.7 [6723]
500	44.78 [1137]	263.99 [6705]

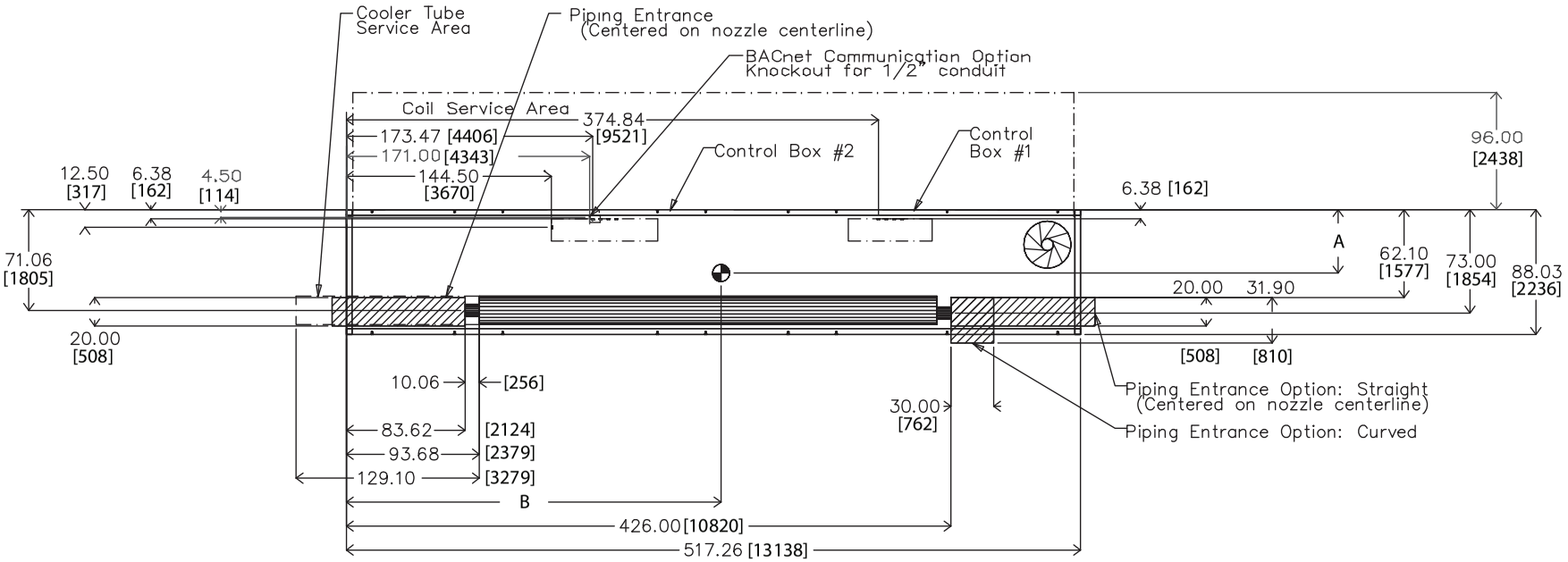

TOP VIEW

Dimensions (cont)

30XA450,500 DUAL POINT (cont)

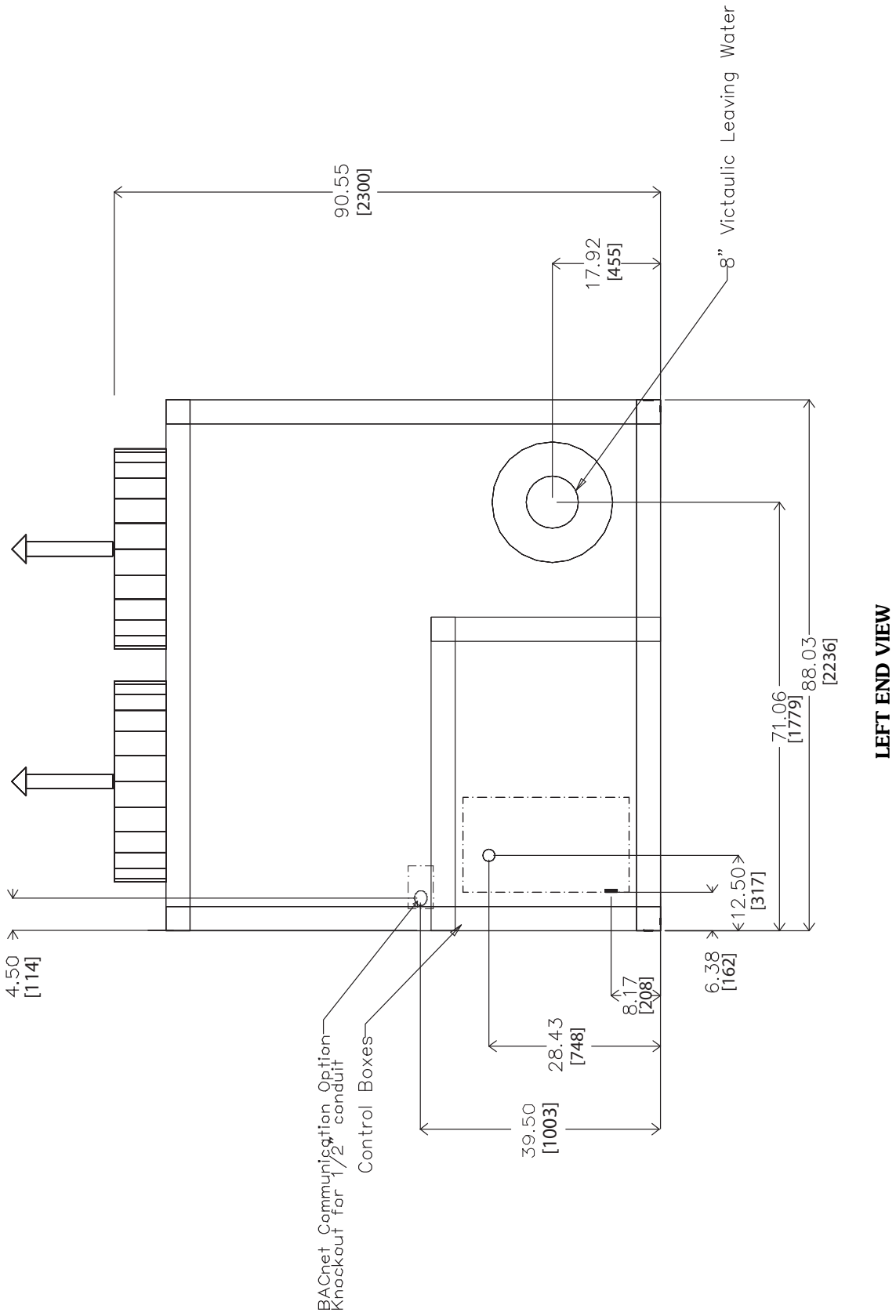

LEFT END VIEW

30XA450,500 DUAL POINT (cont)

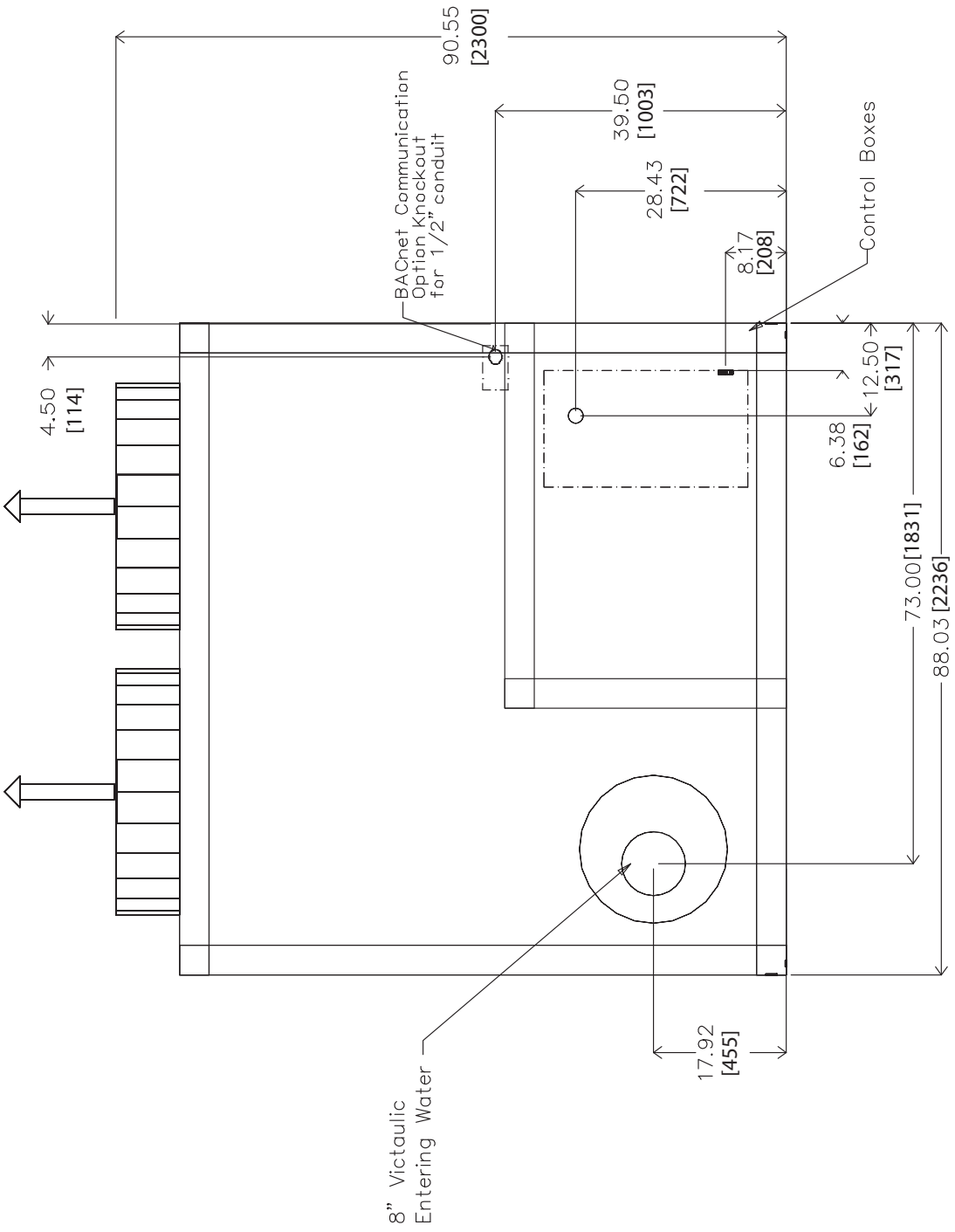

RIGHT END VIEW

Dimensions (cont)

30XA450,500 DUAL POINT (cont)

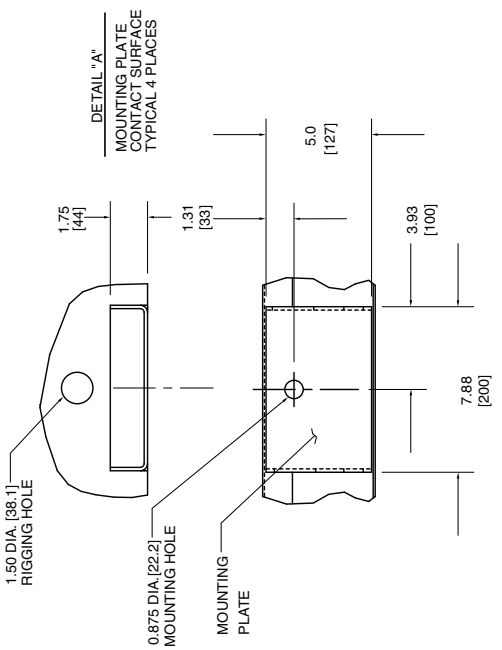

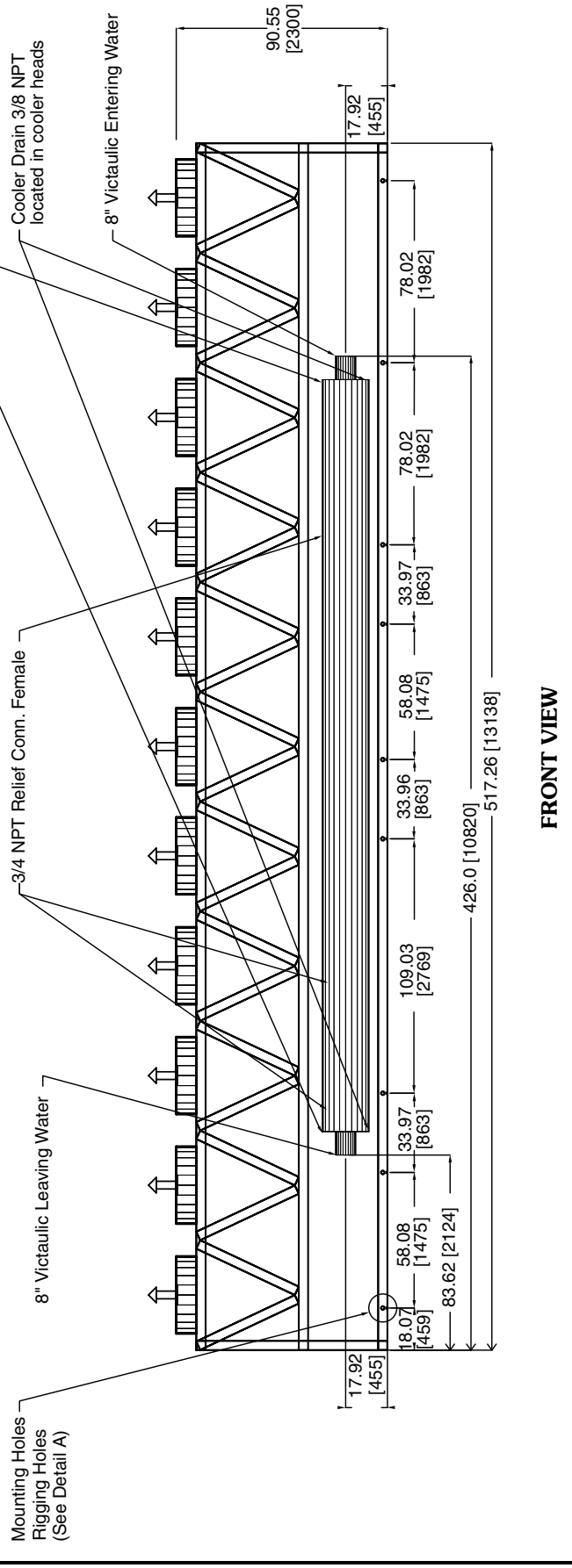

FRONT VIEW

30XA450,500 DUAL POINT (cont)

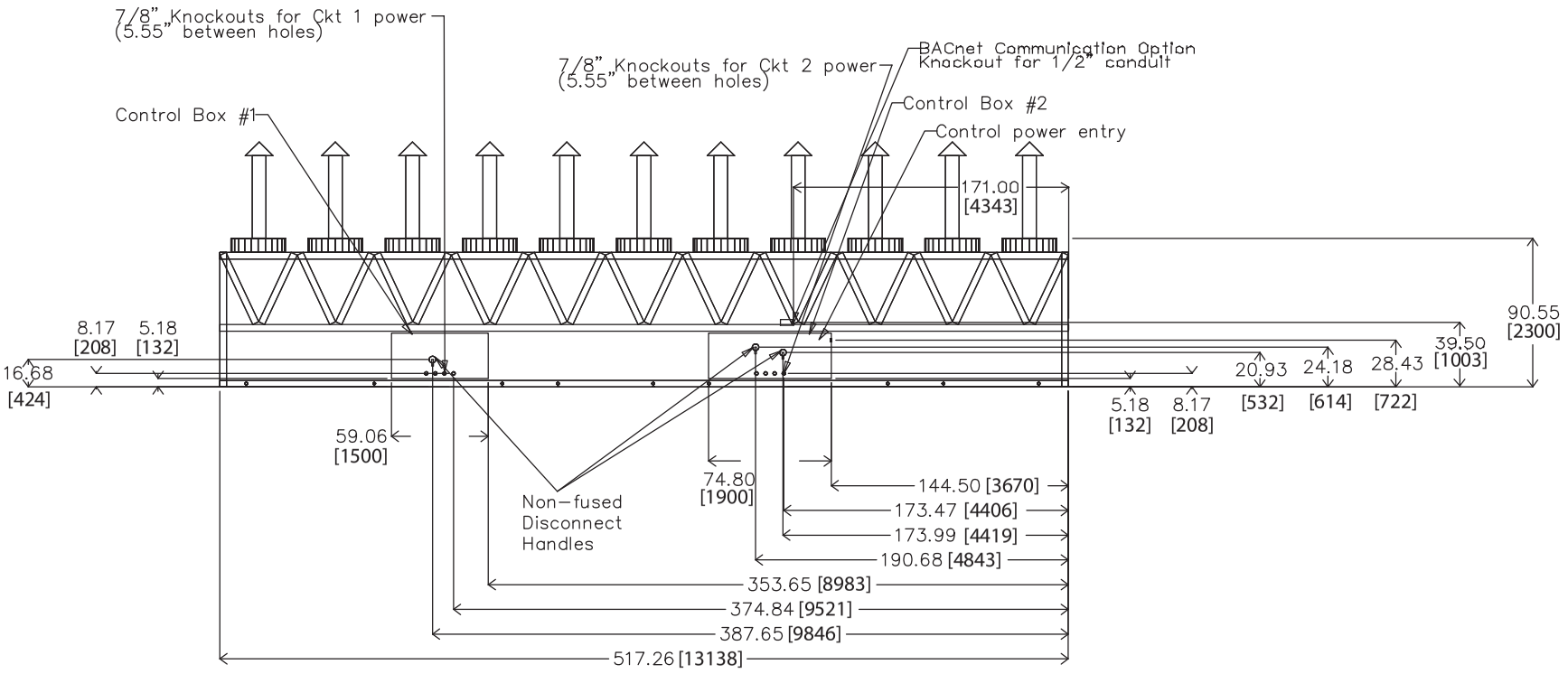

BACK VIEW

Selection procedure

Carrier's Packaged Chiller Builder Selection Program provides quick, easy selection of Carrier's air-cooled liquid chillers. The program considers specific temperature, fluid and flow requirements among other factors such as fouling and altitude corrections.

Before selecting a chiller, consider the following points:

Leaving water temperature (LWT)

- If the LWT is less than 40 F (4.4 C), loop freeze protection to a minimum of 15 F (-9.4 C) below the LWT set point is required. The medium temperature brine option is also required when LWT is less than 30 F (-1.1 C). Consider the DX cooler option for these conditions.
- If the LWT requirement is greater than 60 F (15.5 C), a mixing loop is required.

Entering water temperature (EWT)

- If the EWT requirement is greater than 70 F (21.1 C), a mixing loop is required. The EWT should not exceed 70 F (21.1 C) for extended operation. Pulldown can be accomplished from 95 F (35 C).

Cooler flow rate or cooler delta-T:

- The cooler delta-T (EWT – LWT) must fall between 5 and 20° F (2.8 to 11.1° C) while still meeting the maximum entering requirements.
- For larger or smaller delta-T applications, a mixing loop is required.
- If the cooler flow is variable, the rate of change of flow should not exceed 10% per minute. A loop volume of greater than 3 gallons per ton (3.2 l/kW) is also recommended.

Cooler pressure drop:

- A high cooler pressure drop can be expected when the cooler delta-T is low. A mixing loop can help to alleviate this situation.
- Alternatively, consider a reduced pass option on flooded coolers when there is a low delta-T.
- A low cooler pressure drop can be expected when cooler delta-T is high.
- The plus-one-pass cooler option is recommended on flooded coolers to increase performance when cooler delta-T is high. This is particularly helpful with brine applications.

Water quality, fouling factor:

- Poor water quality can increase the required cooler fouling factor.
- Higher than standard fouling factors lead to lower capacity and higher input kW from a given chiller size compared to running the same application with better quality water (and lower fouling factors).

Operation below 32 F (0° C) ambient temperature:

- Low ambient temperature head pressure control is required.
- Consider wind baffles if average wind speed is greater than 5 mph (8 km/h).
- Consider higher loop volumes, 6 to 10 gallons per nominal ton (6.5 to 10.8 l/kW).
- Loop freeze protection with glycol is strongly recommended to a minimum of 15° F (8.3° C) below lowest anticipated ambient temperature.
- Chilled water pump control is strongly recommended; otherwise override capability is required.

Chiller idle below 32 F (0° C) ambient temperature:

- Loop freeze protection with glycol is strongly recommended to a minimum of 15° F (8.3° C) below lowest anticipated ambient temperature.
- Chilled water pump control is strongly recommended; otherwise override capability is required.
- Drain the cooler — This will require a small amount of glycol for residual water. Cooler heaters will need to be disconnected.
- Consider using a remote cooler. Do not bury refrigerant piping.

Ambient Temperature:

- Highest allowable ambient air temperature is 125 F (52 C).

NOTE: The high ambient option is required for 30XA400-500 chillers which are either operating in multi-chiller configurations or have ambient temperatures at or above 100 F (37.8 C). Regardless of unit size, it may be necessary to select the high ambient option to obtain performance with ambient air temperatures approaching 125 F (52 C).

Cooling capacity requirement:

- Do not oversize the chillers by more than 15% at design conditions.
- If capacity control is required below the standard minimum step of unloading, the minimum load control option should be employed. (See selection program.)

Coil corrosion requirements:

- Coastal application
- Industrial application
- Coastal/industrial application
- Urban application
- Farming

NOTE: See NACO Packaged Chiller Builder and appropriate selection guides for more information.

Temperature reset:

- Return water (standard)
- Outside air temperature (standard)
- Space temperature (accessory sensor required)
- 4 to 20 mA (requires an energy management module)

Demand limit:

- 2-step (requires an energy management module)
- 4 to 20 mA (requires an energy management module)
- CCN Loadshed

To select a 30XA chiller, use the Packaged Chiller Builder Selection program or follow one of the procedures below.

ENGLISH

I Determine 30XA unit size and operating conditions required to meet given capacity at given conditions.

Given:

Capacity . . . . . 106 Tons
Leaving Chilled Water Temp (LCWT) . . . . . .42 F
Cooler Water Temp Rise . . . . . 10° F
Condenser Entering Air Temp . . . . . .95 F
Fouling Factor (Cooler). . . . 0.00010 ($ft^2 \cdot hr \cdot F/Btu$)

NOTE: For other than 10° F temperature rise, data corrections must be made using the Packaged Chiller Builder Program.

II From Chiller Ratings table on page 100 and pressure drop curves on page 99, determine operating data for selected unit.

Unit 30XA120
Capacity . . . . . 107.5 tons
Power Input . . . . . .126.7 kW
Cooler Water Flow . . . . . .257.0 gpm
Cooler Pressure Drop . . . . . .12.0 ft of water

SI

I Determine 30XA unit size and operating conditions required to meet given capacity at given conditions.

Given:

Capacity . . . . . 450 kW
Leaving Chilled Water Temp (LCWT) . . . . . 6 C
Cooler Water Temp Rise . . . . . 5.6° C
Condenser Entering Air Temp . . . . . 35 C
Fouling Factor (Cooler). . . . . .0176 ($m^2 \cdot °C/W$)

NOTE: For other than 5.6° C temperature rise, data corrections must be made using the Packaged Chiller Builder Program.

II From Chiller Ratings table on page 102 and cooler pressure drop curves on page 99, determine operating data for selected unit.

Unit 30XA140
Capacity . . . . . .458.1 kW
Power Input . . . . . .147.5 kW
Cooler Water Flow . . . . . 19.7 l/s
Cooler Pressure Drop . . . . . 41.9 kPa

AquaForce® pump selection

Several pump sizes are available for each AquaForce chiller size to provide flexibility in matching water system requirements. A dual pump option is also available for primary/standby operation. The Carrier Packaged Chiller Builder Selection Program can be used (and is recommended) for pump selection, or selection can be done manually. Pump packages are available in both constant-speed and VFD configurations.

Proper water system design is critical; cooling loads, water pressure drops and proper water line sizing must be accounted for in order to ensure proper system operation. Incorrect or incomplete analysis/design of the water loop could lead to low water flow, loss of water temperature control, and excessive cycling of chiller compressors.

The following are the steps for manual selection of water pumps for the 30XA chillers (refer to Pump Curve Hydronic Package tables).

1. Calculate the water flow rate (gpm or l/s) and the total water (or brine) pressure drop of the system external to the 30XA chiller.
2. Use the pump envelope charts (page 96) to determine proper pump sizing. Plot water flow rate and total head, point on the chart. The next pump curve above this point corresponds to the correct pump.

NOTE: Although pump bhp (brake horsepower) increases with glycol concentration, pumps and pump overloads are selected such that glycol concentrations up to 50% will not trip pump overloads if run within the recommended gpm ranges.

Example: Required water flow rate for a 30XA090, chiller is 200 gpm (12.6 l/s). The pressure drop for the water system external to the chiller is 60 feet (179.4 kPa). The dual pump is needed. Select the pump.

After examining the dual pump charts for the 30XA090 and using the indicated flow rate and external pressure drop, select pump 8.

Performance data

PUMP IMPELLER SIZES

30XA UNIT SIZE	PUMP Hp	SINGLE PUMP				DUAL PUMP			
		Option Code*	Rpm	Impeller Dia. (in.)	Pump Curve	Option Code*	Rpm	Impeller Dia. (in.)	Pump Curve
090-162	5	1	3450	4.5	I	7	3450	4.5	II
	7.5	2	3450	5	I	8	3450	5	II
	10	3	3450	5.4	I	B	3450	5.4	II
	15	4	3450	6.1	I	C	3450	6.1	II

*Option Code refers to the Hydronics Option (position 11) in the model number. See Model Number Nomenclature on page 4 for option identification.

SINGLE PUMP ENVELOPE CURVES (30XA090-162)

30XA090,092,100,102

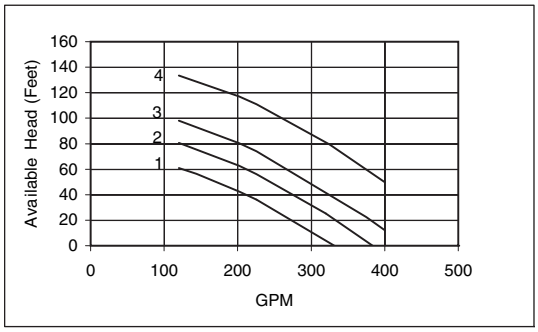

30XA140,142

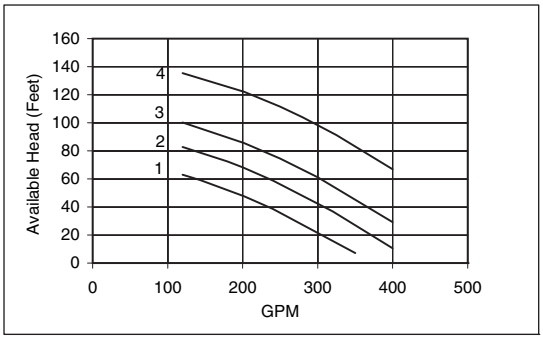

30XA110,112

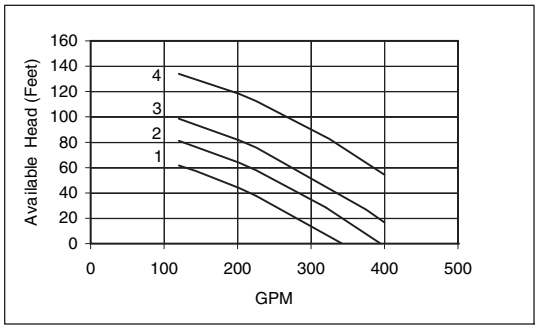

30XA160,162

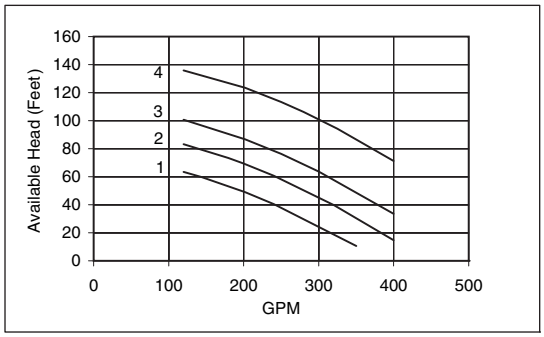

30XA120,122

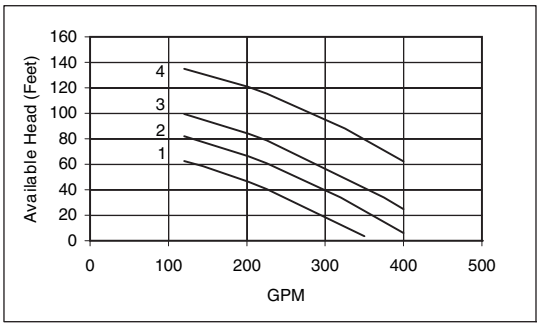

Selection	Pump
1	Single 5HP
2	Single 7.5HP
3	Single 10HP
4	Single 15HP

DUAL PUMP ENVELOPE CURVES (30XA090-162)

30XA090,092,100,102

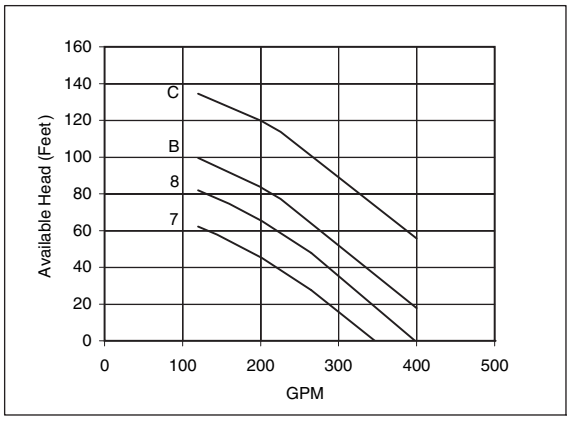

30XA140,142

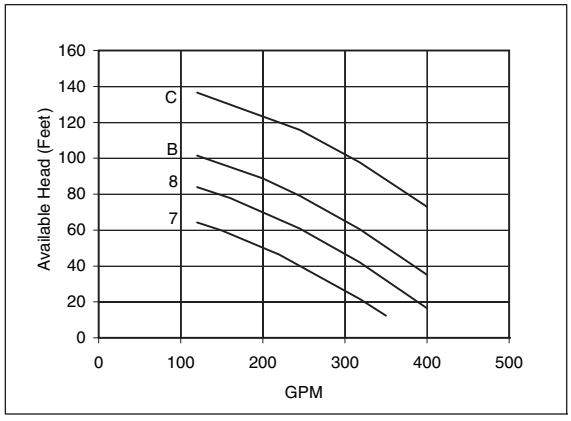

30XA110,112

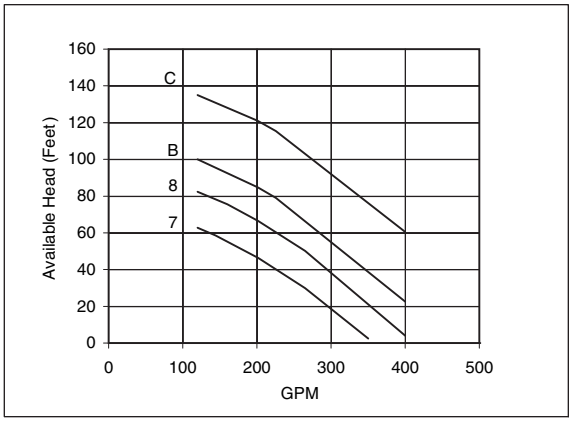

30XA160,162

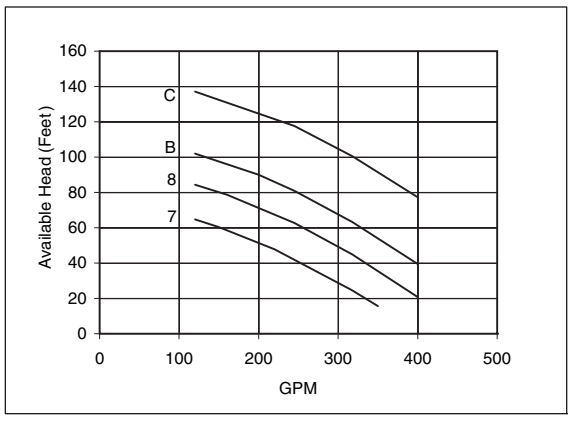

30XA120,122

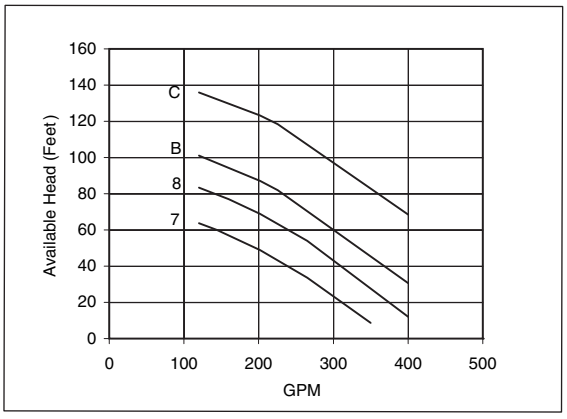

Selection	Pump
7	Dual 5HP
8	Dual 7.5HP
B	Dual 10HP
C	Dual 15HP

Performance data (cont)

PUMP CURVE I FOR HYDRONIC PACKAGE SINGLE PUMP (FRESH WATER)

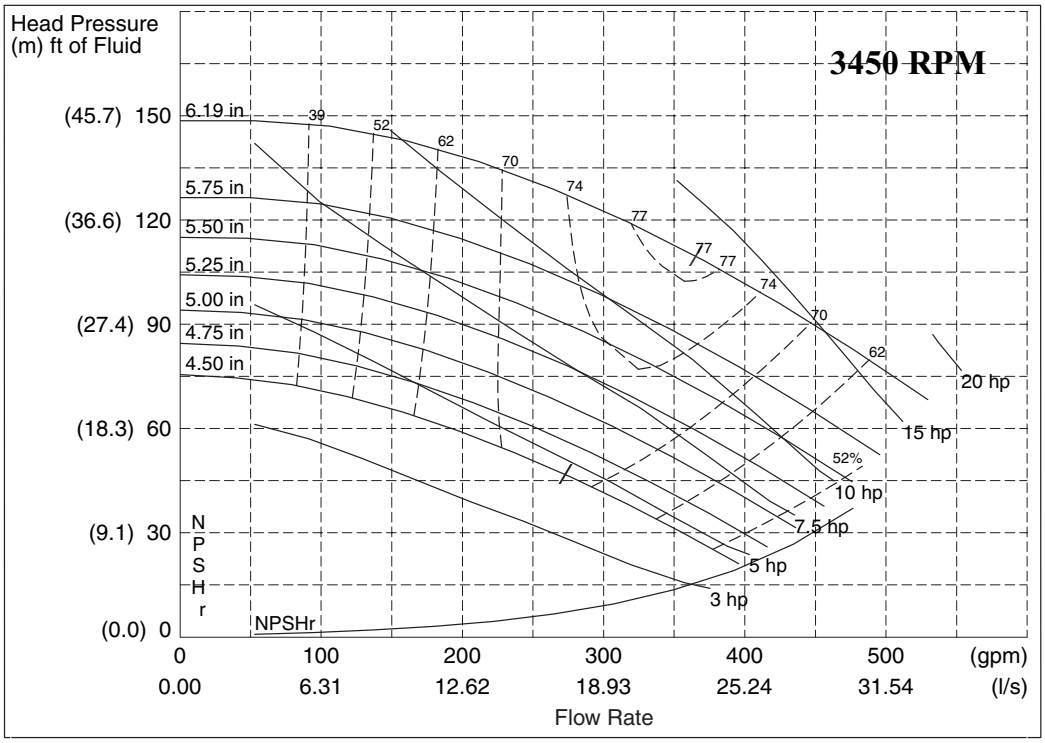

LEGEND

NPSHr — Net Positive Suction Head (Pressure) Required

NOTE: Refer to the Model Number Nomenclature for option identification. Refer to the Pump Impeller Sizes table on page 96 for more information.

PUMP CURVE II FOR HYDRONIC PACKAGE DUAL PUMP (FRESH WATER)

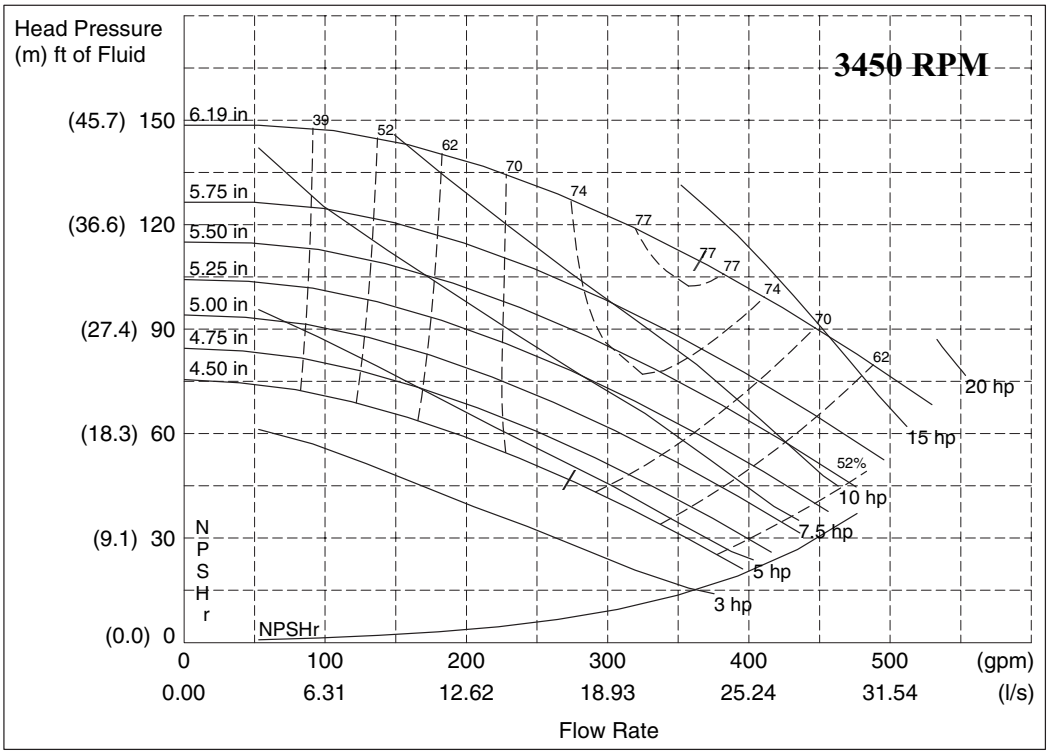

LEGEND

NPSHr — Net Positive Suction Head (Pressure) Required

NOTE: Refer to the Model Number Nomenclature for option identification. Refer to the Pump Impeller Sizes table on page 96 for more information.

COOLER PRESSURE DROP CURVES

30XA080-120

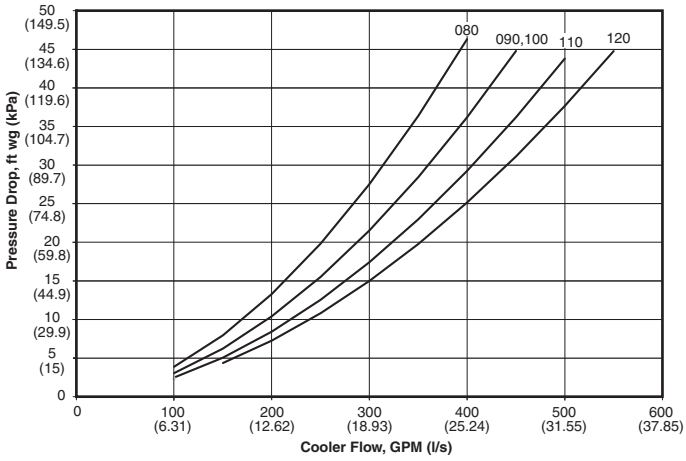

30XA140-240

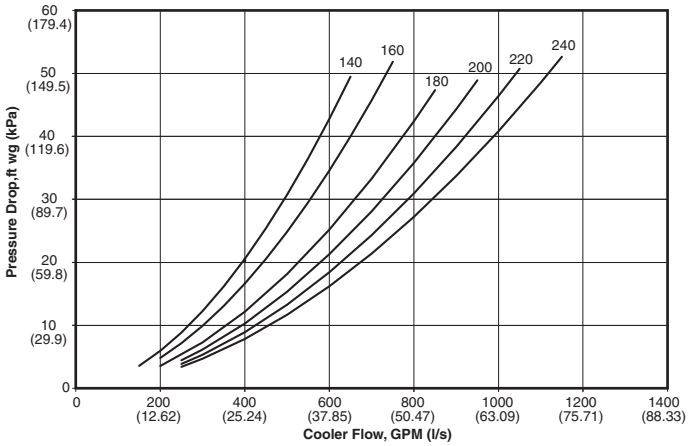

30XA260-500

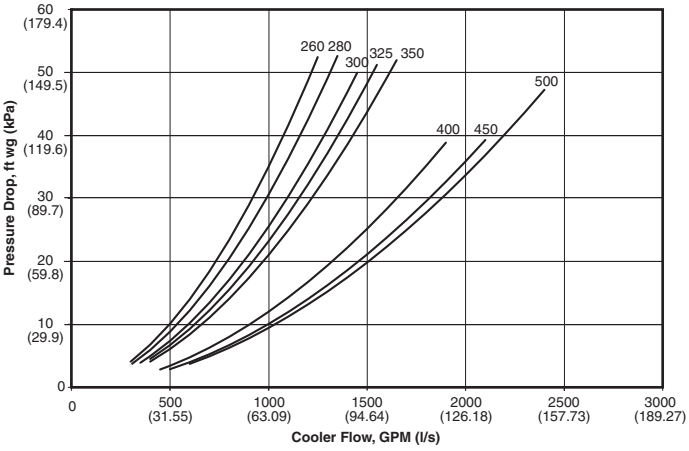

30XA082-202 (DX Cooler)

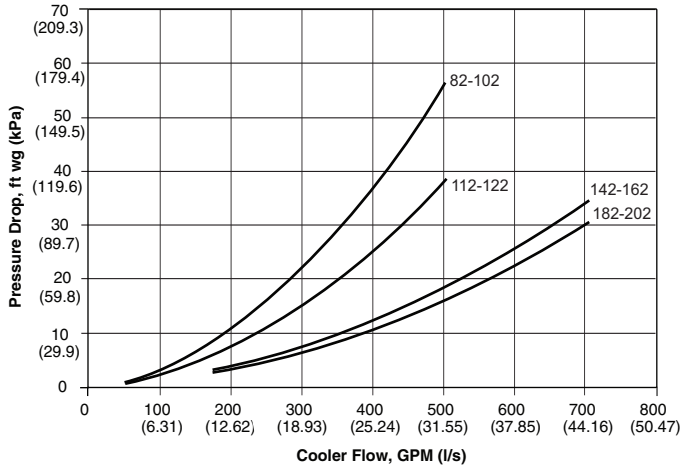

Performance data (cont)

Carrier®

30XA FLOODED COOLER PACKAGED AIR-COOLED CHILLER RATINGS TABLE — ENGLISH

LCWT (F)	30XA UNIT SIZE	CONDENSER ENTERING AIR TEMPERATURE (F)											
		85			95			105			115		
		Cap. Tons	Input Power (kW)	Cooler Flow Rate (gpm)	Cap. Tons	Input Power (kW)	Cooler Flow Rate (gpm)	Cap. Tons	Input Power (kW)	Cooler Flow Rate (gpm)	Cap. Tons	Input Power (kW)	Cooler Flow Rate (gpm)
40	080	74.7	82.2	178.5	70.2	88.3	167.6	65.4	95.2	156.2	60.5	102.7	144.5
	090	82.4	84.9	196.7	79.2	92.7	189.1	75.8	101.6	181.1	72.3	111.3	172.6
	100	91.6	94.2	218.7	87.7	103.3	209.4	83.5	113.4	199.3	79.2	124.6	189.2
	110	100.4	103.5	239.8	96.2	113.7	229.7	91.6	124.9	218.7	86.8	137.6	207.3
	120	108.9	112.8	260.1	104.3	123.9	249.0	99.1	136.0	236.7	93.8	150.1	224.0
	140	129.4	131.6	309.1	124.5	144.7	297.3	119.2	159.2	284.7	113.6	175.0	271.3
	160	149.2	152.7	356.3	143.2	168.2	342.1	136.7	185.1	326.4	129.9	204.1	310.3
	180	166.5	170.1	397.5	160.3	186.8	382.9	153.8	205.1	367.3	146.9	225.2	350.8
	200	189.2	191.9	451.8	181.8	210.8	434.3	174.1	231.6	415.7	165.8	254.4	395.9
	220	205.4	211.6	490.5	197.3	232.8	471.1	188.5	256.3	450.2	179.1	282.6	427.8
	240	223.9	228.8	534.8	214.7	251.6	512.7	204.7	277.0	488.9	194.0	305.7	463.4
	260	244.1	248.0	583.1	234.9	272.7	561.1	225.2	300.2	537.8	214.9	330.8	513.1
	280	261.6	264.9	624.8	251.4	291.4	600.4	240.5	321.0	574.4	228.9	354.2	546.7
	300	282.2	284.0	674.0	271.1	311.4	647.6	259.1	342.9	618.9	246.3	378.2	588.3
	325	298.8	304.6	713.7	287.5	334.8	686.6	275.6	368.8	658.1	263.0	406.5	628.1
	350	318.1	325.0	759.7	305.8	357.2	730.4	292.8	393.5	699.4	279.1	434.1	666.6
	400	376.3	390.7	898.8	361.5	429.8	863.4	345.3	473.1	824.6	319.9	501.4	764.1
	450	417.8	444.9	997.7	401.3	490.0	958.4	383.9	540.3	916.8	324.5	539.7	774.9
	500	450.2	477.4	1075.3	431.9	525.7	1031.6	412.5	579.5	985.2	346.8	578.4	828.2
42	080	77.5	83.8	185.1	72.9	89.8	174.1	68.0	96.7	162.4	62.9	104.3	150.3
	090	85.1	85.9	203.4	81.8	93.8	195.5	78.3	102.7	187.2	74.6	112.6	178.4
	100	95.1	96.5	227.3	91.0	105.7	217.5	86.6	116.0	207.0	81.8	127.0	195.6
	110	103.7	105.8	247.9	99.3	116.2	237.4	94.5	127.6	225.9	89.5	140.5	213.9
	120	112.4	115.4	268.6	107.5	126.7	257.0	102.2	139.1	244.2	96.7	153.7	231.2
	140	133.8	133.5	319.8	128.7	146.7	307.6	123.2	161.3	294.5	117.4	177.3	280.5
	160	154.1	155.0	368.4	147.9	170.7	353.6	141.2	187.7	337.5	134.2	207.0	320.8
	180	172.2	172.7	411.6	165.9	189.5	396.5	159.1	208.0	380.3	152.0	228.2	363.1
	200	195.5	194.9	467.2	187.9	214.0	449.1	179.9	234.9	429.9	171.3	258.0	409.3
	220	213.0	214.4	509.1	204.5	235.8	488.8	195.5	259.5	467.1	185.7	286.1	443.9
	240	231.4	234.1	553.0	222.2	256.3	531.1	212.1	281.5	507.0	201.0	310.7	480.4
	260	252.5	252.3	603.6	243.0	277.2	580.7	232.8	305.0	556.4	222.1	335.9	530.8
	280	270.8	269.0	647.2	260.2	295.9	621.8	248.9	325.8	594.8	236.8	359.5	566.0
	300	290.9	290.9	695.1	279.4	318.8	667.7	267.3	350.0	638.9	251.6	379.0	601.4
	325	308.9	310.3	738.2	297.1	341.0	710.0	284.7	375.3	680.4	271.6	413.6	649.2
	350	327.7	333.5	783.2	315.2	365.8	753.4	302.1	401.9	722.0	285.7	440.3	682.8
	400	387.8	399.8	926.7	372.7	439.1	890.8	356.7	483.0	852.6	325.4	510.8	777.7
	450	431.0	454.1	1029.9	414.2	499.3	989.9	396.2	550.6	946.9	318.2	513.1	760.5
	500	463.6	489.7	1107.9	445.0	537.8	1063.6	425.3	591.8	1016.4	344.1	535.1	822.2
44	080	80.2	85.5	191.8	75.6	91.6	180.7	70.5	98.3	168.6	65.3	105.9	156.2
	090	88.0	87.2	210.4	84.8	95.1	202.7	80.9	103.9	193.3	77.0	113.8	184.2
	100	98.4	98.5	235.3	93.9	107.8	224.7	89.7	118.5	214.6	84.7	129.7	202.6
	110	107.0	108.2	255.9	102.4	118.6	244.9	97.5	130.3	233.1	92.3	143.6	220.8
	120	115.8	118.1	277.0	110.7	129.5	264.8	105.3	142.4	251.8	99.7	157.4	238.4
	140	138.2	135.3	330.5	132.8	148.7	317.7	127.2	163.5	304.3	121.2	179.6	289.8
	160	159.1	157.4	380.4	152.3	173.0	364.2	145.7	190.5	348.5	138.5	210.1	331.3
	180	177.8	175.1	425.2	171.3	192.1	409.7	164.4	210.9	393.1	157.1	231.3	375.6
	200	201.9	197.9	482.7	194.0	217.2	464.0	185.7	238.4	444.1	176.9	261.8	422.9
	220	219.9	218.8	525.9	211.7	239.6	506.2	202.4	262.8	484.0	192.4	289.7	460.1
	240	237.4	242.1	567.7	228.1	264.1	545.6	218.4	288.9	522.3	205.2	309.9	490.6
	260	260.9	256.5	623.9	250.9	281.7	600.2	240.5	310.0	575.2	229.4	341.2	548.6
	280	279.1	275.1	667.5	268.5	301.2	642.1	257.3	330.8	615.3	244.9	364.9	585.6
	300	299.4	297.8	715.9	287.5	326.3	687.6	275.0	358.4	657.7	256.8	379.5	614.1
	325	319.0	316.1	762.8	306.6	347.1	733.4	293.9	382.1	702.7	280.4	420.9	670.5
	350	337.3	342.0	806.6	324.1	374.8	775.1	310.6	411.9	742.8	289.6	444.7	692.5
	400	399.3	409.6	954.8	383.6	449.4	917.6	367.0	494.3	877.7	330.5	510.7	790.3
	450	443.5	465.5	1060.5	426.8	509.3	1020.8	408.0	562.4	975.6	331.3	522.0	792.3
	500	475.9	504.1	1138.1	458.0	549.2	1095.5	435.0	603.7	1040.1	349.8	552.1	836.5

LEGEND

Cap. — Cooling Capacity (Tons of Refrigeration)
kW — Total Power
LCWT — Leaving Chilled Water Temperature

NOTES:
1. All ratings are in accordance with AHRI (Air Conditioning, Heating, and Refrigeration Institute, U.S.A.) Standard 550/590, based on:
   a. A cooler water temperature rise of 10° F. For other than a 10° F temperature rise, data corrections must be made using the Packaged Chiller Builder Program.
   b. A fouling factor of 0.00010 ($ft^2 \cdot hr \cdot F/Btu$) in the cooler.
   c. Refrigerant R-134a.
2. Ratings generated are based on standard ambient temperature (850 rpm condenser fan) units using flooded coolers.
3. Data for 30XA450, 500, LCWT 50, Condenser Entering Air Temperature 115 F not available at time of printing.
4. All performance data is obtained from the latest version of the NACO Packaged Chiller Builder Program.

30XA FLOODED COOLER PACKAGED AIR-COOLED CHILLER RATINGS TABLE — ENGLISH (cont)

LCWT (F)	30XA UNIT SIZE	CONDENSER ENTERING AIR TEMPERATURE (F)											
		85			95			105			115		
		Cap. Tons	Input Power (kW)	Cooler Flow Rate (gpm)	Cap. Tons	Input Power (kW)	Cooler Flow Rate (gpm)	Cap. Tons	Input Power (kW)	Cooler Flow Rate (gpm)	Cap. Tons	Input Power (kW)	Cooler Flow Rate (gpm)
46	080	83.1	87.3	198.9	78.2	93.4	187.2	73.1	100.2	175.0	67.9	107.6	162.4
	090	91.4	89.0	218.6	87.6	96.8	209.6	83.6	105.6	200.1	79.5	115.3	190.2
	100	101.6	100.7	243.1	97.4	110.3	232.9	92.8	121.0	222.1	87.8	132.5	210.0
	110	110.4	110.6	264.1	105.6	121.2	252.7	100.6	133.2	240.8	95.2	146.7	227.9
	120	119.4	120.9	285.7	114.1	132.4	273.0	108.5	145.7	259.7	102.8	161.2	245.9
	140	142.8	137.3	341.6	137.3	150.8	328.5	131.4	165.7	314.5	125.2	182.0	299.6
	160	164.0	160.4	392.5	157.5	176.1	376.8	150.5	193.4	360.1	143.1	213.3	342.4
	180	183.6	177.7	439.4	176.9	194.9	423.3	169.7	213.8	406.2	162.2	234.4	388.1
	200	208.2	201.8	498.2	200.4	220.7	479.4	191.8	242.1	459.0	182.7	265.7	437.1
	220	226.2	224.9	541.2	217.8	245.3	521.2	208.7	268.9	499.4	198.9	295.1	475.8
	240	243.4	250.7	582.5	233.9	273.5	559.7	223.8	299.2	535.4	208.3	311.8	498.4
	260	269.0	261.9	643.7	259.0	286.9	619.8	248.5	315.0	594.6	237.1	346.7	567.3
	280	287.4	282.1	687.7	276.5	308.8	661.5	264.9	338.7	633.9	252.7	372.1	604.8
	300	307.4	306.8	735.6	295.6	335.0	707.3	282.8	367.1	676.7	262.0	379.9	627.0
	325	329.6	322.0	788.6	316.8	353.7	758.0	303.5	389.1	726.2	289.5	428.4	692.8
	350	347.2	351.1	830.8	333.7	384.9	798.5	319.6	422.6	764.6	293.6	449.1	702.4
	400	410.0	421.3	981.1	394.1	461.8	942.9	377.2	507.0	902.4	317.1	470.7	758.8
	450	455.8	477.0	1090.7	438.0	523.8	1047.9	415.2	569.0	993.4	336.1	516.9	804.2
	500	488.0	519.4	1167.6	468.6	568.7	1121.3	441.9	614.1	1057.5	360.7	557.0	863.1
48	080	86.1	89.1	206.1	81.0	95.3	194.0	75.8	102.2	181.4	70.3	102.0	168.4
	090	94.7	90.7	226.7	90.7	98.7	217.2	86.6	107.6	207.3	82.2	107.2	196.8
	100	104.8	102.9	250.8	100.4	112.7	240.3	95.6	123.5	229.0	90.5	124.9	216.6
	110	113.7	113.1	272.3	108.8	123.9	260.4	103.6	136.2	248.1	98.1	139.8	234.8
	120	123.0	123.8	294.5	117.4	135.5	281.1	111.7	149.3	267.5	105.8	154.9	253.3
	140	147.4	139.2	352.9	141.7	152.9	339.3	135.7	168.0	324.8	129.2	171.5	309.3
	160	168.4	164.9	403.3	161.8	180.2	387.4	154.9	197.4	370.8	147.4	204.1	353.0
	180	189.5	180.3	453.7	182.5	197.6	437.0	175.1	216.7	419.3	167.3	222.1	400.6
	200	213.7	208.0	511.4	205.7	226.6	492.5	197.4	247.1	472.6	188.3	254.6	450.9
	220	232.0	232.3	555.4	223.3	253.3	534.5	214.0	276.8	512.3	202.2	277.6	484.0
	240	249.4	259.4	597.1	239.4	283.1	573.3	228.8	309.7	547.8	208.8	288.8	499.8
	260	277.0	268.2	663.2	266.6	293.6	638.4	255.7	321.8	612.4	244.3	333.8	584.9
	280	295.7	289.3	708.0	284.4	316.5	680.8	272.4	347.1	652.1	257.7	352.3	617.0
	300	315.1	317.4	754.3	302.7	346.4	724.7	287.7	370.2	688.9	266.5	360.8	638.2
	325	339.9	328.9	813.8	327.0	360.3	783.0	313.2	396.1	749.9	298.7	412.9	715.2
	350	356.9	361.1	854.4	343.2	395.0	821.6	328.4	433.7	786.2	287.2	398.2	687.5
	400	420.9	433.4	1007.7	404.4	474.8	968.0	386.8	521.4	925.9	325.8	473.9	780.1
	450	468.1	490.3	1120.6	450.0	537.3	1077.3	422.6	575.7	1011.6	349.1	525.5	835.8
	500	499.5	537.6	1195.8	479.4	588.1	1147.7	448.1	626.1	1072.8	361.9	546.2	866.3
50	080	89.0	91.1	213.3	83.9	97.3	200.9	78.5	104.3	188.0	72.9	104.2	174.6
	090	97.8	92.4	234.4	93.9	100.6	224.9	89.6	109.7	214.7	85.1	109.5	203.7
	100	108.0	105.0	258.6	103.4	115.0	247.8	98.5	126.0	236.0	93.2	127.6	223.2
	110	117.1	115.6	280.5	112.0	126.6	268.2	106.7	139.3	255.5	101.0	143.2	241.8
	120	126.6	126.6	303.3	120.8	138.6	289.4	115.0	153.1	275.6	108.9	159.1	260.9
	140	152.1	141.2	364.3	146.2	155.0	350.1	140.0	170.2	335.3	133.3	173.9	319.2
	160	172.8	169.5	413.8	165.9	185.2	397.4	158.8	202.8	380.4	151.2	209.7	362.3
	180	195.4	182.9	468.1	188.2	200.4	450.8	180.6	219.6	432.6	172.6	225.2	413.4
	200	219.0	214.3	524.7	210.8	233.4	505.0	202.2	254.3	484.4	193.0	262.0	462.4
	220	237.7	239.9	569.3	228.7	261.6	547.7	219.1	285.7	524.8	210.4	291.5	504.0
	240	255.2	268.5	611.4	244.9	293.2	586.6	232.0	311.9	555.8	218.3	301.7	523.0
	260	284.2	276.2	680.8	273.8	301.5	655.9	262.9	329.5	629.8	252.9	336.9	605.9
	280	303.1	298.5	726.1	291.7	325.8	698.6	279.6	356.4	669.8	268.8	364.5	643.9
	300	322.7	328.4	772.9	309.8	358.3	742.1	292.3	373.8	700.2	278.5	373.5	667.0
	325	348.9	338.6	835.7	335.9	370.0	804.6	322.4	404.9	772.3	310.1	415.2	742.7
	350	365.7	372.7	876.1	351.6	407.4	842.2	334.6	442.8	801.5	312.8	440.6	749.4
	400	430.9	447.6	1032.1	414.1	489.6	991.8	394.3	527.7	944.5	330.8	470.4	792.3
	450	479.6	505.2	1148.8	460.7	553.5	1103.6	419.6	548.9	1005.2	353.1	519.1	845.8
	500	510.6	556.2	1223.1	489.8	608.3	1173.1	445.5	601.1	1067.2	—	—	—

LEGEND

Cap. — Cooling Capacity (Tons of Refrigeration)
kW — Total Power
LCWT — Leaving Chilled Water Temperature

NOTES:
1. All ratings are in accordance with AHRI (Air Conditioning, Heating, and Refrigeration Institute, U.S.A.) Standard 550/590, based on:
   a. A cooler water temperature rise of 10° F. For other than a 10° F temperature rise, data corrections must be made using the Packaged Chiller Builder Program.
   b. A fouling factor of 0.00010 ($ft^2 \cdot hr \cdot F/Btu$) in the cooler.
   c. Refrigerant R-134a.
2. Ratings generated are based on standard ambient temperature (850 rpm condenser fan) units using flooded coolers.
3. Data for 30XA450, 500, LCWT 50, Condenser Entering Air Temperature 115 F not available at time of printing.
4. All performance data is obtained from the latest version of the NACO Packaged Chiller Builder Program.

Performance data (cont)

Carrier®

30XA FLOODED COOLER PACKAGED AIR-COOLED CHILLER RATINGS TABLE — SI

LCWT (C)	30XA UNIT SIZE	CONDENSER ENTERING AIR TEMPERATURE (C)											
		30			35			40			45		
		Cap. kW	Input Power (kW)	Cooler Flow Rate (l/s)	Cap. kW	Input Power (kW)	Cooler Flow Rate (l/s)	Cap. kW	Input Power (kW)	Cooler Flow Rate (l/s)	Cap. kW	Input Power (kW)	Cooler Flow Rate (l/s)
5	080	265.9	83.5	11.4	251.3	89.0	10.8	236.0	95.2	10.1	220.3	101.9	9.6
	090	293.1	86.1	12.6	282.9	93.2	12.1	272.1	101.2	11.7	260.8	109.9	11.2
	100	326.7	96.2	14.0	314.0	104.5	13.5	300.4	113.6	12.9	285.9	123.4	12.3
	110	357.2	105.7	15.3	343.5	114.9	14.7	328.7	125.0	14.1	313.2	136.3	13.4
	120	387.3	115.2	16.6	372.2	125.3	16.0	355.5	136.2	15.3	338.6	148.9	14.5
	140	460.7	133.8	19.8	444.8	145.7	19.1	427.9	158.7	18.4	409.9	172.9	17.6
	160	530.8	155.3	22.8	511.6	169.4	21.9	490.7	184.6	21.0	469.0	201.6	20.1
	180	593.0	173.0	25.4	573.1	188.1	24.6	552.2	204.6	23.7	530.1	222.5	22.7
	200	673.3	195.2	28.9	649.7	212.4	27.9	624.6	231.1	26.8	598.2	251.5	25.7
	220	732.3	215.0	31.4	705.9	234.3	30.3	677.8	255.4	29.1	647.9	278.8	27.8
	240	797.6	233.1	34.2	768.0	253.7	32.9	736.1	276.5	31.6	701.9	302.1	30.1
	260	869.3	252.6	37.3	839.6	275.0	36.0	808.2	299.7	34.7	775.2	327.0	33.3
	280	931.9	269.5	40.0	898.8	293.6	38.6	863.8	320.2	37.1	826.8	349.9	35.5
	300	1003.0	290.0	43.0	967.3	315.0	41.5	930.0	342.6	39.9	889.2	374.0	38.2
	325	1063.6	310.4	45.6	1027.0	337.9	44.1	988.7	368.4	42.4	948.5	402.2	40.7
	350	1130.4	332.3	48.5	1091.7	361.2	46.8	1050.7	393.4	45.1	1006.8	429.7	43.2
	400	1337.4	398.8	57.4	1290.5	434.0	55.4	1240.2	473.3	53.2	1185.9	516.9	50.9
	450	1485.3	453.4	63.7	1432.4	494.6	61.4	1376.9	540.0	59.1	1197.4	539.1	50.9
	500	1599.2	487.9	68.6	1541.5	531.2	66.1	1479.5	579.7	63.5	1279.7	578.2	54.4
6	080	274.4	85.0	11.8	259.6	90.4	11.1	244.1	96.6	10.5	227.9	103.3	9.8
	090	301.7	87.1	13.0	291.2	94.2	12.5	280.0	102.2	12.0	268.3	111.0	11.5
	100	337.7	98.2	14.5	324.5	106.6	13.9	310.4	115.9	13.3	295.3	125.8	12.7
	110	367.7	107.7	15.8	353.4	117.1	15.2	338.1	127.4	14.5	322.2	139.0	13.8
	120	398.1	117.5	17.1	382.4	127.8	16.4	365.3	139.1	15.7	348.0	152.0	14.9
	140	474.7	135.5	20.4	458.1	147.5	19.7	440.6	160.7	18.9	422.1	174.9	18.1
	160	546.4	157.5	23.5	526.4	171.7	22.6	504.9	187.0	21.7	482.6	204.2	20.7
	180	610.9	175.3	26.2	590.5	190.6	25.3	569.0	207.2	24.4	546.3	225.2	23.4
	200	693.2	198.0	29.8	668.8	215.3	28.7	643.1	234.1	27.6	615.8	254.7	26.4
	220	756.3	217.6	32.5	729.0	237.0	31.3	699.9	258.3	30.0	669.1	281.9	28.7
	240	818.6	239.4	35.1	790.1	258.9	33.9	758.5	281.2	32.6	724.3	306.6	31.1
	260	895.9	256.4	38.5	864.9	279.1	37.1	832.6	304.0	35.7	798.4	331.5	34.3
	280	960.3	273.7	41.2	926.6	297.7	39.8	890.4	324.6	38.2	852.2	354.5	36.6
	300	1029.9	296.3	44.2	993.1	321.7	42.6	954.3	350.0	41.0	913.6	381.0	39.2
	325	1095.4	315.5	47.0	1057.3	343.4	45.4	1017.7	374.3	43.7	976.1	408.4	41.9
	350	1160.7	339.9	49.8	1120.4	369.5	48.1	1078.3	402.1	46.3	1033.9	438.1	44.4
	400	1373.7	407.4	59.0	1325.1	443.2	56.9	1273.8	482.9	54.7	1195.6	517.0	51.3
	450	1526.2	462.9	65.5	1472.7	503.9	63.2	1416.3	549.3	60.8	1229.1	546.1	52.3
	500	1640.0	500.0	70.4	1581.3	543.3	67.9	1518.2	592.1	65.2	1304.7	585.1	55.5
7	080	283.2	86.6	12.2	265.5	91.6	11.4	252.3	98.1	10.8	235.9	104.8	10.1
	090	311.4	88.5	13.4	297.8	95.1	12.8	288.2	103.4	12.4	276.1	112.2	11.9
	100	347.7	100.1	14.9	330.1	107.8	14.2	320.5	118.2	13.8	304.7	128.2	13.1
	110	377.9	109.9	16.2	359.9	118.6	15.5	347.7	130.0	14.9	331.3	141.8	14.2
	120	409.0	120.0	17.6	389.0	129.5	16.7	375.2	142.0	16.1	357.7	155.4	15.4
	140	488.4	137.2	21.0	466.7	148.7	20.0	453.6	162.6	19.5	434.6	176.9	18.7
	160	561.9	159.8	24.1	535.1	173.0	23.0	519.5	189.5	22.3	496.8	206.9	21.3
	180	628.5	177.5	27.0	601.9	192.1	25.8	585.7	209.8	25.2	562.6	227.9	24.2
	200	713.5	200.7	30.6	681.7	217.2	29.3	662.1	237.2	28.4	634.0	258.1	27.2
	220	776.5	222.3	33.3	743.7	239.6	31.9	721.8	261.8	31.0	690.9	285.1	29.7
	240	837.3	246.8	36.0	801.6	264.1	34.4	776.7	289.3	33.4	735.9	306.1	31.6
	260	922.2	260.1	39.6	881.7	281.7	37.9	857.3	308.4	36.8	822.2	336.2	35.3
	280	985.7	279.7	42.3	943.4	301.2	40.5	916.5	329.9	39.4	878.5	359.3	37.7
	300	1056.9	302.7	45.4	1010.2	326.3	43.4	978.9	357.6	42.0	930.3	380.8	40.0
	325	1127.5	320.7	48.4	1077.4	347.1	46.3	1047.1	380.4	45.0	1004.5	414.9	43.1
	350	1190.7	347.8	51.1	1138.7	374.8	48.9	1105.8	411.2	47.5	1045.8	441.5	44.9
	400	1408.9	416.9	60.5	1348.0	449.4	57.9	1306.7	493.2	56.1	1209.8	515.5	52.0
	450	1565.3	473.4	67.2	1499.5	509.3	64.4	1451.7	561.1	62.3	1250.2	551.0	53.2
	500	1678.5	513.0	72.1	1609.4	549.2	69.1	1546.9	603.0	66.4	1295.3	560.7	55.1

LEGEND

Cap. — Cooling Capacity (kW of Refrigeration)
kW — Total Power
LCWT — Leaving Chilled Water Temperature

NOTES:
1. All ratings are in accordance with AHRI (Air Conditioning, Heating, and Refrigeration Institute, U.S.A.) Standard 550/590, based on:
   a. A cooler water temperature rise of 5.6° C. For other than a 5.6° C temperature rise, data corrections must be made using the Packaged Chiller Builder Program.
   b. A fouling factor of 0.00018 ($m^2 \cdot °C/W$) in the cooler.
   c. Refrigerant R-134a.
2. Ratings generated are based on standard ambient temperature (850 rpm condenser fan) units using flooded coolers.
3. All performance data is obtained from the latest version of the NACO Packaged Chiller Builder Program.

30XA FLOODED COOLER PACKAGED AIR-COOLED CHILLER RATINGS TABLE — SI (cont)

LCWT (C)	30XA UNIT SIZE	CONDENSER ENTERING AIR TEMPERATURE (C)											
		30			35			40			45		
		Cap. kW	Input Power (kW)	Cooler Flow Rate (l/s)	Cap. kW	Input Power (kW)	Cooler Flow Rate (l/s)	Cap. kW	Input Power (kW)	Cooler Flow Rate (l/s)	Cap. kW	Input Power (kW)	Cooler Flow Rate (l/s)
8	080	292.4	88.2	12.6	276.8	93.8	11.9	260.7	99.9	11.2	244.0	106.5	10.5
	090	322.1	90.1	13.8	310.0	97.2	13.3	297.4	105.1	12.8	284.0	113.7	12.2
	100	357.7	102.0	15.4	344.2	110.8	14.8	329.8	120.4	14.2	314.2	130.7	13.5
	110	388.6	112.1	16.7	373.4	121.7	16.0	357.4	132.6	15.4	340.6	144.6	14.6
	120	420.3	122.6	18.1	403.2	133.0	17.3	385.5	145.0	16.6	367.4	158.8	15.8
	140	503.0	138.9	21.6	485.5	151.2	20.9	467.0	164.6	20.1	447.3	179.1	19.2
	160	577.4	162.8	24.8	556.6	176.7	23.9	534.5	192.2	23.0	511.3	209.7	22.0
	180	647.1	179.8	27.8	625.5	195.4	26.9	602.8	212.4	25.9	579.0	230.7	24.9
	200	732.9	204.8	31.5	708.1	221.7	30.4	681.5	240.5	29.3	652.6	261.5	28.0
	220	795.9	228.3	34.2	769.2	246.9	33.1	740.7	267.7	31.8	709.9	291.0	30.5
	240	856.4	254.6	36.8	825.9	275.4	35.5	793.6	298.5	34.1	743.9	307.7	32.0
	260	947.3	265.5	40.7	915.4	288.2	39.3	882.2	313.2	37.9	846.5	341.1	36.4
	280	1012.0	286.1	43.5	977.0	310.3	42.0	940.3	337.3	40.4	901.8	366.9	38.7
	300	1081.5	311.6	46.5	1043.7	337.2	44.8	1003.8	365.6	43.1	947.2	380.2	40.7
	325	1161.2	326.2	49.9	1120.3	355.0	48.1	1078.0	386.8	46.3	1033.9	421.7	44.4
	350	1222.4	356.2	52.5	1179.2	386.9	50.7	1134.3	420.8	48.7	1057.5	444.8	45.4
	400	1442.9	427.5	62.0	1392.0	464.3	59.8	1338.2	505.0	57.5	1222.8	514.2	52.5
	450	1604.2	483.8	68.9	1547.4	526.4	66.5	1473.7	566.4	63.3	1238.9	524.6	52.8
	500	1716.1	527.6	73.7	1654.9	572.2	71.1	1568.1	611.8	67.4	1297.6	550.1	55.3
10	080	311.1	91.7	13.4	294.6	97.3	12.7	277.7	103.6	11.9	260.1	110.2	11.2
	090	342.4	93.2	14.7	329.9	100.6	14.2	316.5	108.8	13.6	302.2	117.5	13.0
	100	377.8	106.0	16.3	363.4	115.0	15.6	348.0	124.9	15.0	331.2	135.3	14.2
	110	409.7	116.6	17.6	393.4	126.6	16.9	376.7	138.0	16.2	358.9	150.4	15.4
	120	442.8	127.8	19.0	424.4	138.6	18.3	406.3	151.6	17.5	387.1	165.8	16.6
	140	532.3	142.6	22.9	513.6	155.0	22.1	494.0	168.7	21.2	473.0	183.4	20.3
	160	604.7	171.0	26.0	582.9	185.2	25.1	560.5	200.9	24.1	536.8	218.4	23.1
	180	684.2	184.6	29.4	661.3	200.4	28.4	637.3	217.7	27.4	612.1	236.3	26.3
	200	766.8	216.1	33.0	740.9	233.4	31.9	713.8	252.1	30.7	684.9	272.6	29.5
	220	832.0	242.0	35.8	803.4	261.6	34.6	773.3	283.2	33.3	734.2	298.3	31.6
	240	893.3	270.8	38.4	860.5	293.2	37.0	819.1	309.1	35.2	761.8	308.1	32.8
	260	995.1	278.6	42.8	962.0	301.5	41.4	927.7	326.5	39.9	890.8	354.6	38.3
	280	1061.1	301.0	45.6	1024.8	325.8	44.1	986.8	353.2	42.4	939.7	374.9	40.4
	300	1129.3	331.3	48.6	1088.5	358.3	46.8	1039.1	379.1	44.7	964.1	381.0	41.5
	325	1221.4	341.5	52.5	1180.3	370.0	50.8	1137.7	401.2	48.9	1092.1	436.4	47.0
	350	1280.2	375.9	55.1	1235.4	407.4	53.1	1188.6	442.1	51.1	1058.6	422.3	45.5
	400	1508.2	451.6	64.9	1454.9	489.6	62.6	1392.1	522.8	59.9	1192.6	469.1	51.3
	450	1678.6	509.8	72.2	1618.8	553.5	69.6	1520.1	582.8	65.4	1292.6	526.1	55.1
	500	1787.0	561.1	76.9	1720.9	608.3	74.0	1581.2	599.4	68.0	1373.4	564.1	58.5

LEGEND

Cap. — Cooling Capacity (kW of Refrigeration)
kW — Total Power
LCWT — Leaving Chilled Water Temperature

NOTES:

1. All ratings are in accordance with AHRI (Air Conditioning, Heating, and Refrigeration Institute, U.S.A.) Standard 550/590, based on:
   a. A cooler water temperature rise of 5.6° C. For other than a 5.6° C temperature rise, data corrections must be made using the Packaged Chiller Builder Program.
   b. A fouling factor of 0.00018 ($m^2 \cdot °C/W$) in the cooler.
   c. Refrigerant R-134a.
2. Ratings generated are based on standard ambient temperature (850 rpm condenser fan) units using flooded coolers.
3. All performance data is obtained from the latest version of the NACO Packaged Chiller Builder Program.

Typical piping and wiring (flooded cooler)

30XA UNITS WITHOUT HYDRONIC PACKAGE

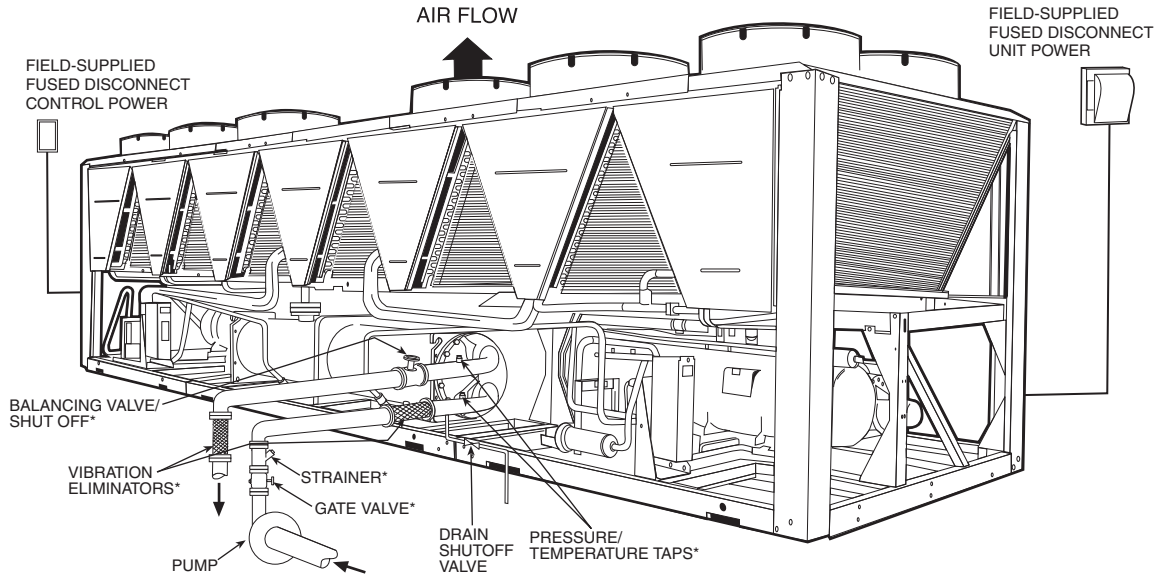

LEGEND

- Airflow Through Condenser
- Power Wiring
- Chilled Water Piping

*Field-installed.

NOTES:
1. Chiller must be installed level to maintain proper compressor oil return.
2. Piping shown are general points-of-connection guides only and are not intended for a specific installation. Wiring and piping shown are for a quick overview of system and are not in accordance with recognized standards.
3. All wiring must comply with applicable local and national codes.
4. All piping must follow standard piping techniques. Refer to Carrier System Design Manual or appropriate ASHRAE (American Society of Heating, Refrigerating, and Air Conditioning Engineers) handbook for details.

30XA UNITS WITH HYDRONIC PACKAGE

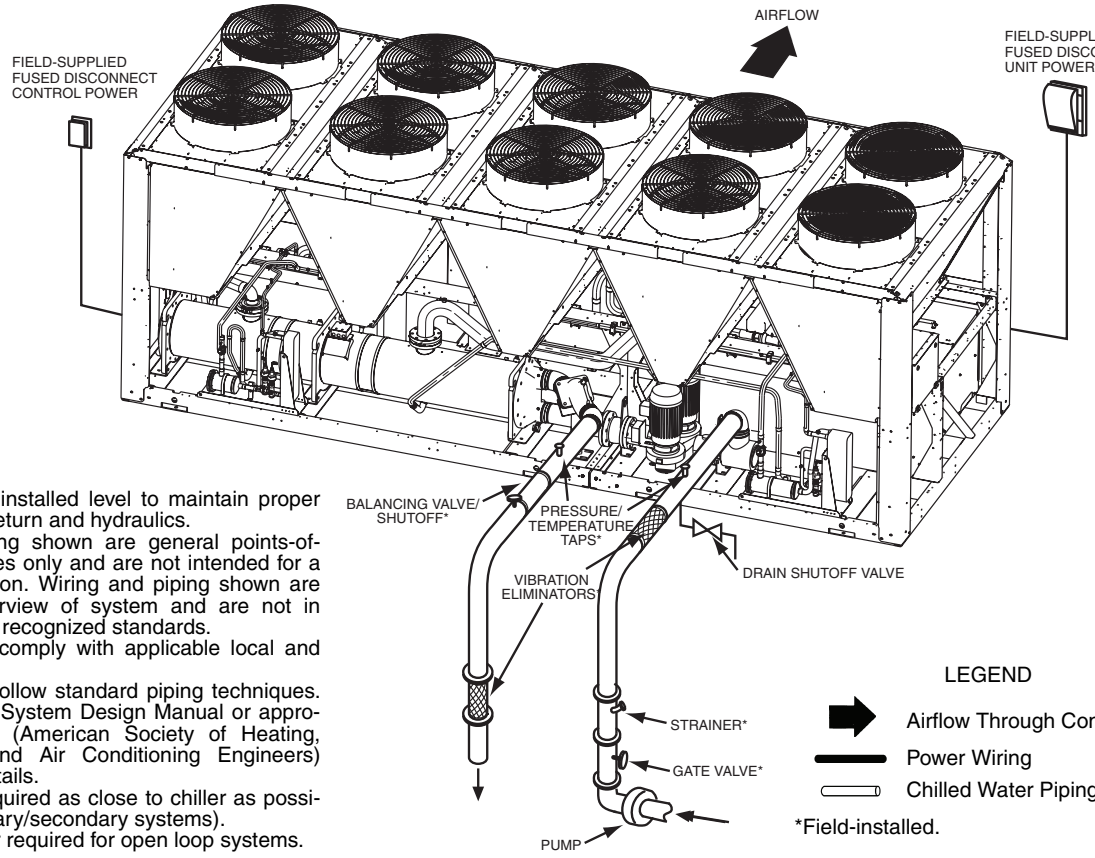

NOTES:
1. Chiller must be installed level to maintain proper compressor oil return and hydraulics.
2. Wiring and piping shown are general points-of-connection guides only and are not intended for a specific installation. Wiring and piping shown are for a quick overview of system and are not in accordance with recognized standards.
3. All wiring must comply with applicable local and national codes.
4. All piping must follow standard piping techniques. Refer to Carrier System Design Manual or appropriate ASHRAE (American Society of Heating, Refrigerating, and Air Conditioning Engineers) handbook for details.
5. Air separator required as close to chiller as possible (except primary/secondary systems).
6. 20 mesh strainer required for open loop systems.

LEGEND

- Airflow Through Condenser
- Power Wiring
- Chilled Water Piping

*Field-installed.

Typical piping and wiring (DX cooler)

30XA UNITS WITHOUT HYDRONIC PACKAGE

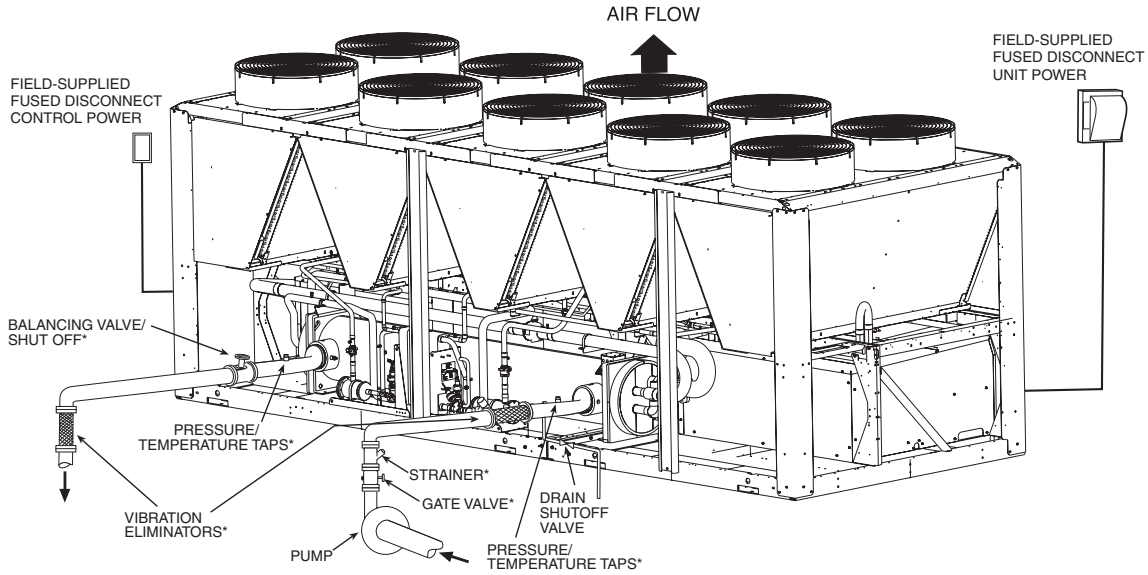

LEGEND

- Airflow Through Condenser
- Power Wiring
- Chilled Water Piping

*Field-installed.

NOTES:
1. Chiller must be installed level to maintain proper compressor oil return.
2. Piping shown are general points-of-connection guides only and are not intended for a specific installation. Wiring and piping shown are for a quick overview of system and are not in accordance with recognized standards.
3. All wiring must comply with applicable local and national codes.
4. All piping must follow standard piping techniques. Refer to Carrier System Design Manual or appropriate ASHRAE (American Society of Heating, Refrigerating, and Air Conditioning Engineers) handbook for details.

30XA UNITS WITH HYDRONIC PACKAGE

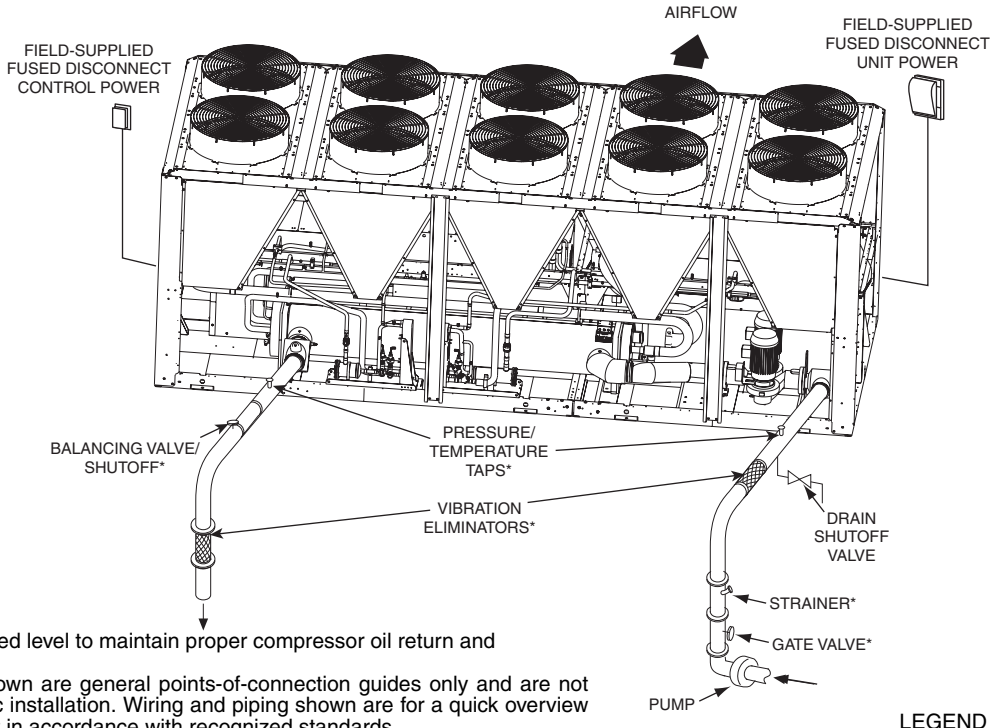

NOTES:
1. Chiller must be installed level to maintain proper compressor oil return and hydraulics.
2. Wiring and piping shown are general points-of-connection guides only and are not intended for a specific installation. Wiring and piping shown are for a quick overview of system and are not in accordance with recognized standards.
3. All wiring must comply with applicable local and national codes.
4. All piping must follow standard piping techniques. Refer to Carrier System Design Manual or appropriate ASHRAE (American Society of Heating, Refrigerating, and Air Conditioning Engineers) handbook for details.
5. Air separator required as close to chiller as possible (except primary/secondary systems).
6. 20 mesh strainer required for open loop systems.

LEGEND

- Airflow Through Condenser
- Power Wiring
- Chilled Water Piping

*Field-installed.

Typical piping and wiring (cont)

TYPICAL PIPING DIAGRAM ON 30XA UNITS WITHOUT HYDRONIC PACKAGE

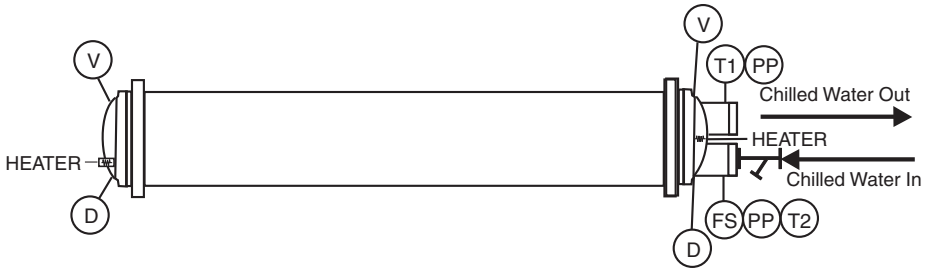

LEGEND

D — Drain, 3/4-in. NPT
FS — Flow Switch
PP — Pipe Plug, 1/4-in. NPT
T1 — Leaving Water Thermistor
T2 — Entering Water Thermistor
V — Vent, 1/4-in. NPT

TYPICAL PIPING DIAGRAM ON 30XA UNITS WITH HYDRONIC PACKAGE — SINGLE PUMP

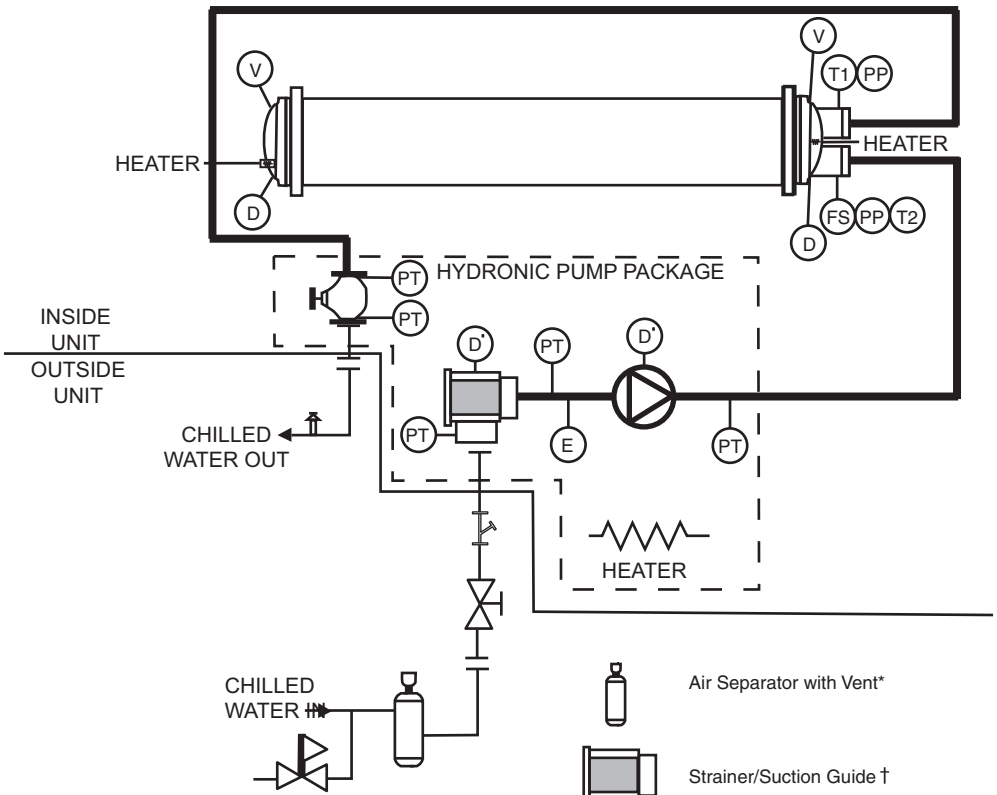

LEGEND

D — Drain,3/4-in. NPT
D′ — Drain, 1/4-in. NPT
E — Expansion Tank Connection, 3/4-in. NPT
FS — Flow Switch
PP — Pipe Plug, 1/4-in. NPT
PT — Pressure/Temperature Tap
T1 — Leaving Water Thermistor
T2 — Entering Water Thermistor
V — Vent, 1/4-in. NPT
– – – – Indicates items provided with the optional hydronic pump package.

*Field-supplied and installed.
†Factory-installed option.
**Required for open loop systems.

TYPICAL PIPING DIAGRAM ON 30XA UNITS WITH HYDRONIC PACKAGE — DUAL PUMPS

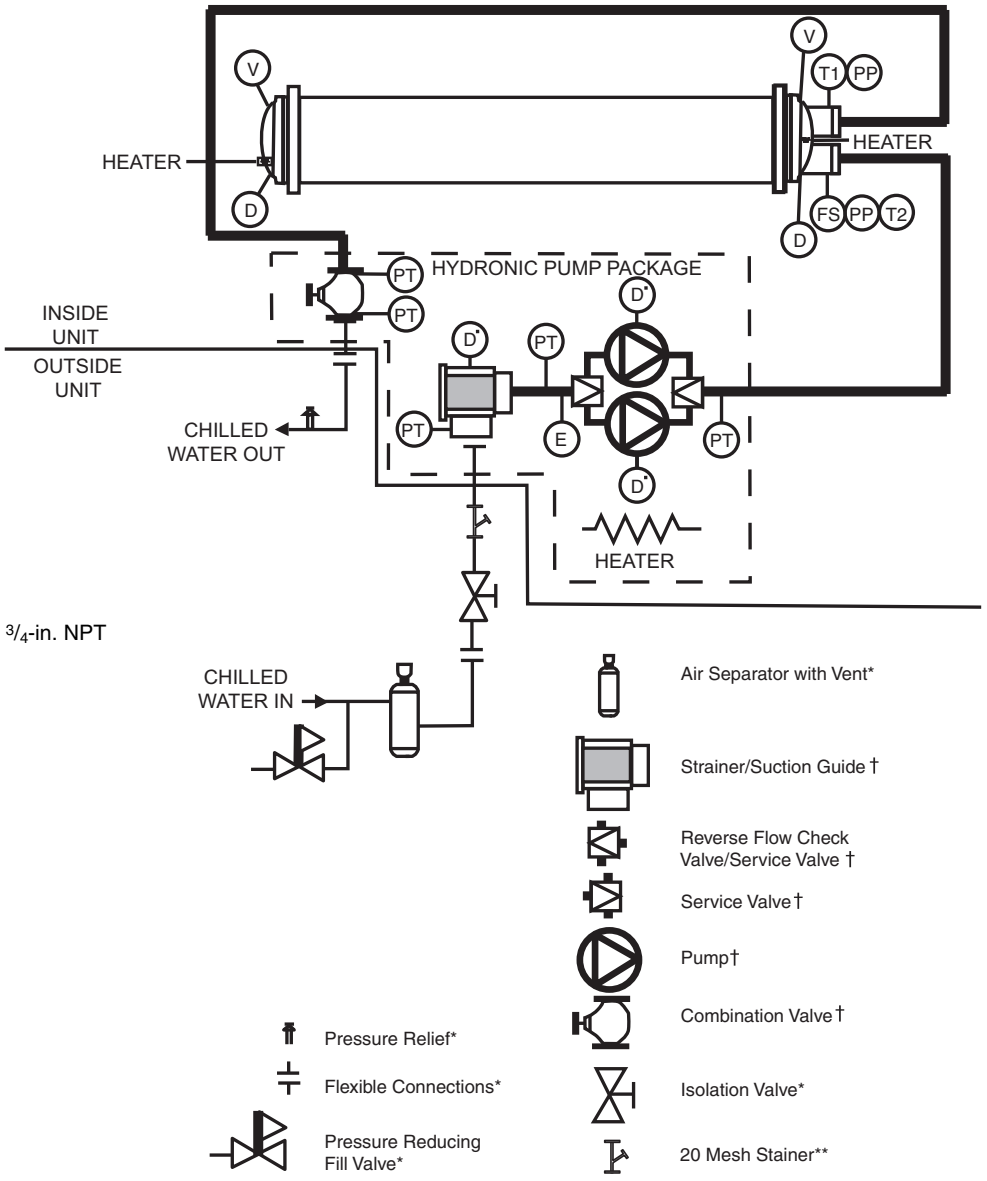

LEGEND

D — Drain, 3/4-in. NPT
D′ — Drain, 1/4-in. NPT
E — Expansion Tank Connection, 3/4-in. NPT
FS — Flow Switch
PP — Pipe Plug, 1/4-in. NPT
PT — Pressure/Temperature Tap
T1 — Leaving Water Thermistor
T2 — Entering Water Thermistor
V — Vent, 1/4-in. NPT

*Field-supplied and installed.
†Factory-installed option.
**Required for open loop systems.

Typical piping and wiring (cont)

TYPICAL PIPING DIAGRAM ON 30XA DX COOLER OPTION UNITS WITHOUT HYDRONIC PACKAGE

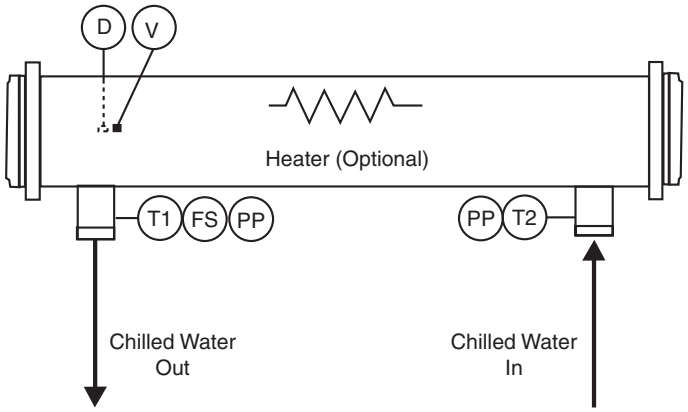

LEGEND

D — Drain, 3/4-in. NPT
FS — Flow Switch
PP — Pipe Plug, 1/4-in. NPT
T1 — Leaving Water Thermistor
T2 — Entering Water Thermistor
V — Vent, 1/4-in. NPT

TYPICAL PIPING DIAGRAM ON 30XA DX COOLER OPTION UNITS WITH HYDRONIC PACKAGE — SINGLE PUMP

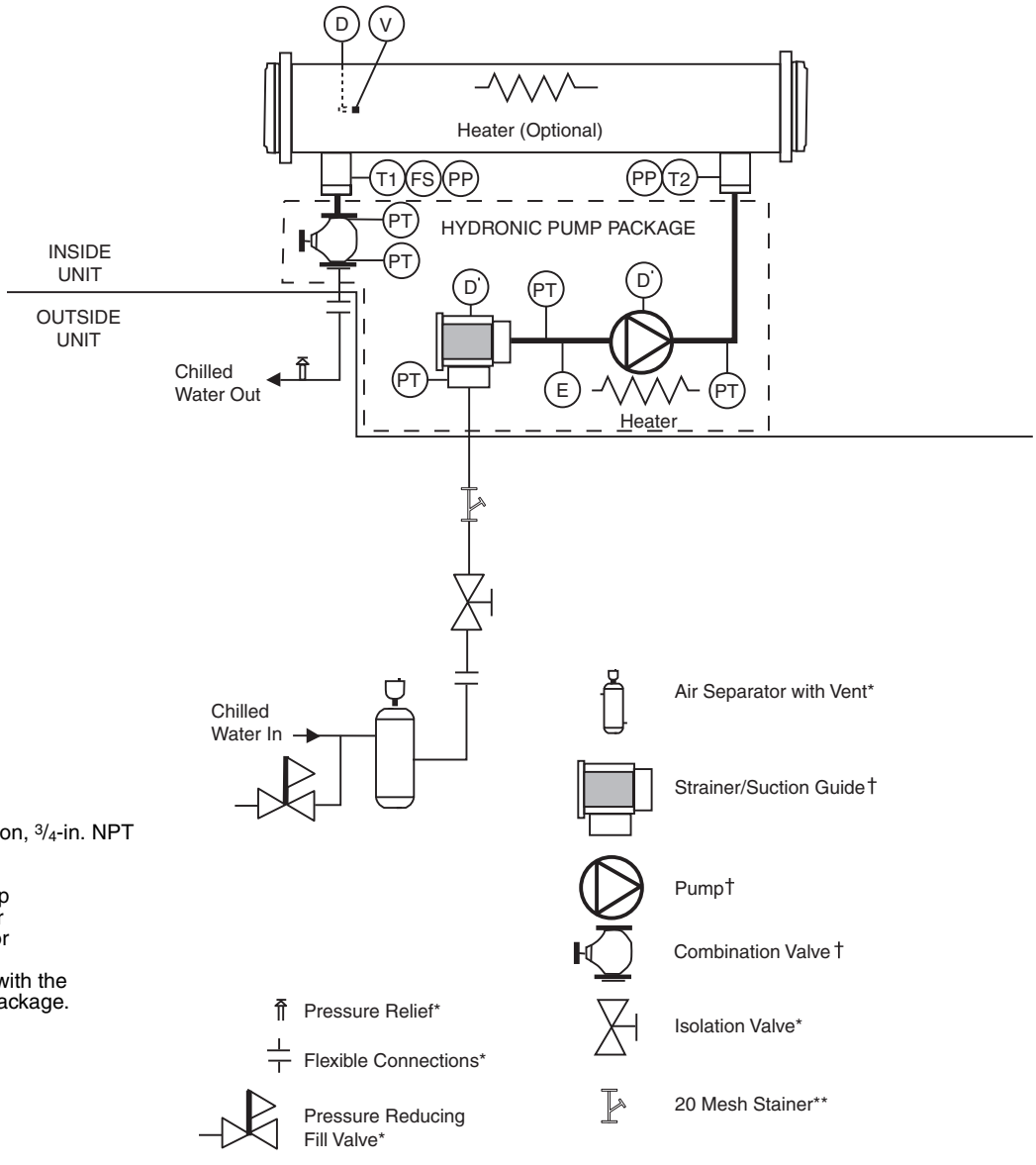

LEGEND

D — Drain,3/4-in. NPT
D′ — Drain, 1/4-in. NPT
E — Expansion Tank Connection, 3/4-in. NPT
FS — Flow Switch
PP — Pipe Plug, 1/4-in. NPT
PT — Pressure/Temperature Tap
T1 — Leaving Water Thermistor
T2 — Entering Water Thermistor
V — Vent, 1/4-in. NPT
- - - - Indicates items provided with the optional hydronic pump package.

*Field-supplied and installed.
†Factory-installed option.
**Required for open loop systems.

TYPICAL PIPING DIAGRAM ON 30XA DX COOLER OPTION UNITS WITH HYDRONIC PACKAGE — DUAL PUMPS

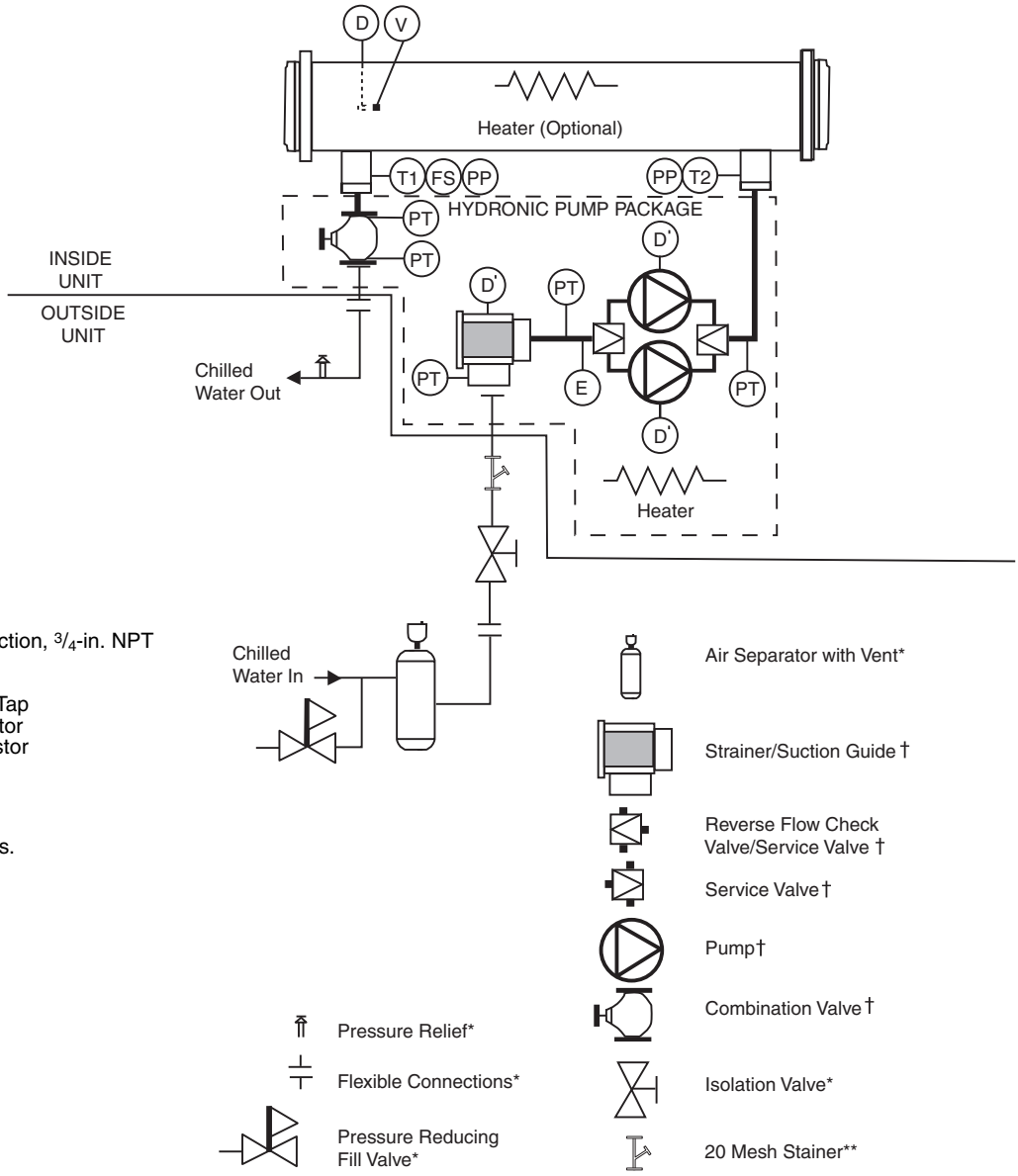

LEGEND

D — Drain, 3/4-in. NPT
D′ — Drain, 1/4-in. NPT
E — Expansion Tank Connection, 3/4-in. NPT
FS — Flow Switch
PP — Pipe Plug, 1/4-in. NPT
PT — Pressure/Temperature Tap
T1 — Leaving Water Thermistor
T2 — Entering Water Thermistor
V — Vent, 1/4-in. NPT

*Field-supplied and installed.
†Factory-installed option.
**Required for open loop systems.

Electrical data

SINGLE POINT (STANDARD CONDENSER FAN MOTORS)

UNIT 30XA	UNIT VOLTAGE			NUMBER OF COND FANS	NO HYDRONIC PACKAGE					5 HP PUMP, 3450 RPM					7.5 HP PUMP, 3450 RPM					CONTROL CIRCUIT	
	V-Hz (3 Ph)	Supplied			MCA	MOCP	ICF		Rec Fuse Size	MCA	MOCP	ICF		Rec Fuse Size	MCA	MOCP	ICF		Rec Fuse Size	Voltage 1 PH, 60 Hz	MCA and MOCP
		Min	Max				WD	XL				WD	XL				WD	XL			
080, 082	230-60	207	253	6	315.5	400	484.2	1170.2	350	—	—	—	—	—	—	—	—	—	—	115	40
	200-60	187	220	6	347.6	450	549.6	1338.6	400	—	—	—	—	—	—	—	—	—	—	115	40
	460-60	414	506	6	157.7	200	242.1	585.1	175	—	—	—	—	—	—	—	—	—	—	115	40
	575-60	518	633	6	121.2	150	191.9	465.9	150	—	—	—	—	—	—	—	—	—	—	115	40
	380-60	342	418	6	183.5	250	289.7	704.7	225	—	—	—	—	—	—	—	—	—	—	115	40
090, 092	230-60	207	253	8	334.0	450	499.1	1185.1	400	350.0	450	515.1	1201.1	400	357.2	450	522.3	1208.3	400	115	40
	200-60	187	220	8	368.0	500	566.0	1355.0	450	385.7	500	583.7	1372.7	450	393.6	500	591.7	1380.7	450	115	40
	460-60	414	506	8	167.0	225	249.6	592.6	200	175.0	225	257.6	600.6	200	178.6	225	261.2	604.2	200	115	40
	575-60	518	633	8	128.5	175	197.8	471.8	150	134.9	175	204.2	478.2	150	137.7	175	207.0	481.0	150	115	40
	380-60	342	418	8	194.5	250	298.6	713.6	225	204.2	250	308.3	723.3	225	208.6	250	312.6	727.6	250	115	40
100, 102	230-60	207	253	8	364.6	500	536.7	1278.7	400	380.6	500	552.7	1294.7	450	387.8	500	559.9	1301.9	450	115	40
	200-60	187	220	8	401.3	500	607.8	1461.8	450	419.0	500	625.5	1479.5	500	427.0	500	633.5	1487.5	500	115	40
	460-60	414	506	8	182.3	250	268.4	639.4	200	190.3	250	276.4	647.4	225	193.9	250	280.0	651.0	225	115	40
	575-60	518	633	8	139.5	175	211.7	508.7	175	145.9	175	218.1	515.1	175	148.8	200	220.9	517.9	175	115	40
	380-60	342	418	8	212.7	250	321.7	770.7	250	222.4	300	331.3	780.3	250	226.7	300	335.7	784.7	250	115	40
110, 112	230-60	207	253	8	405.7	500	536.7	—	450	421.7	500	552.7	—	500	428.9	600	559.9	—	500	115	40
	200-60	187	220	8	446.2	600	607.8	—	500	463.9	600	625.5	—	600	471.9	600	633.5	—	600	115	40
	460-60	414	506	8	202.4	250	268.4	639.4	225	210.4	250	276.4	647.4	250	214.0	300	280.0	651.0	250	115	40
	575-60	518	633	8	155.5	200	211.7	508.7	175	161.9	225	218.1	515.1	200	164.8	225	220.9	517.9	200	115	40
	380-60	342	418	8	236.4	300	321.7	770.7	300	246.1	300	331.3	780.3	300	250.4	350	335.7	784.7	300	115	40
120, 122	230-60	207	253	8	438.6	600	569.6	—	500	454.6	600	585.6	—	500	461.8	600	592.8	—	600	115	40
	200-60	187	220	8	482.2	600	643.8	—	600	499.9	600	661.5	—	600	507.8	600	669.4	—	600	115	40
	460-60	414	506	8	218.4	300	284.4	655.4	250	226.4	300	292.4	663.4	250	230.0	300	296.0	667.0	300	115	40
	575-60	518	633	8	168.4	225	224.5	521.5	200	174.8	225	230.9	527.9	200	177.7	225	233.8	530.8	200	115	40
	380-60	342	418	8	255.3	350	340.6	789.6	300	265.0	350	350.3	799.3	300	269.4	350	354.7	803.7	300	115	40
140, 142	230-60	207	253	10	534.7	800	796.7	—	700	550.7	800	812.7	—	700	557.9	800	819.9	—	700	115	40
	200-60	187	220	10	588.5	800	906.1	—	700	606.2	800	923.8	—	700	614.1	800	931.8	—	700	115	40
	460-60	414	506	10	267.3	400	398.4	1030.4	350	275.3	400	406.4	1038.4	350	278.9	400	410.0	1042.0	350	115	40
	575-60	518	633	10	205.0	300	315.5	821.5	250	211.4	300	321.9	827.9	250	214.3	300	324.7	830.7	250	115	40
	380-60	342	418	10	311.2	450	478.9	1243.9	350	320.9	450	488.6	1253.6	400	325.3	450	493.0	1258.0	400	115	40
160, 162	230-60	207	253	10	621.1	800	997.6	—	700	637.1	800	1013.6	—	800	644.3	800	1020.8	—	800	115	40
	200-60	187	220	10	682.8	1000	1136.1	—	800	700.5	1000	1153.8	—	800	708.5	1000	1161.7	—	800	115	40
	460-60	414	506	10	309.7	450	498.4	1306.4	350	317.7	450	506.4	1314.4	400	321.3	450	510.0	1318.0	400	115	40
	575-60	518	633	10	238.1	350	396.3	1042.3	300	244.5	350	402.7	1048.7	300	247.4	350	405.6	1051.6	300	115	40
	380-60	342	418	10	361.1	500	598.9	1577.9	450	370.8	500	608.6	1587.6	450	375.2	500	612.9	1591.9	450	115	40
180, 182	230-60	207	253	12	673.2	800	935.2	—	800	—	—	—	—	—	—	—	—	—	—	115	40
	200-60	187	220	12	740.9	1000	1058.5	—	1000	—	—	—	—	—	—	—	—	—	—	115	40
	460-60	414	506	12	336.6	450	467.6	1099.6	400	—	—	—	—	—	—	—	—	—	—	115	40
	575-60	518	633	12	258.3	350	368.8	874.8	300	—	—	—	—	—	—	—	—	—	—	115	40
	380-60	342	418	12	391.5	500	559.2	1324.2	450	—	—	—	—	—	—	—	—	—	—	115	40
200, 202	230-60	207	253	12	769.6	1000	1146.0	—	1000	—	—	—	—	—	—	—	—	—	—	115	40
	200-60	187	220	12	846.0	1000	1299.2	—	1000	—	—	—	—	—	—	—	—	—	—	115	40
	460-60	414	506	12	383.9	500	572.6	1380.6	450	—	—	—	—	—	—	—	—	—	—	115	40
	575-60	518	633	12	294.8	400	453.0	1099.0	350	—	—	—	—	—	—	—	—	—	—	115	40
	380-60	342	418	12	447.2	600	685.0	1664.0	500	—	—	—	—	—	—	—	—	—	—	115	40
220	230-60	207	253	13	850.2	1200	1152.0	—	1000	—	—	—	—	—	—	—	—	—	—	115	40
	200-60	187	220	13	935.1	1200	1305.9	—	1200	—	—	—	—	—	—	—	—	—	—	115	40
	460-60	414	506	13	424.7	600	575.6	1383.6	500	—	—	—	—	—	—	—	—	—	—	115	40
	575-60	518	633	13	326.3	450	455.4	1101.4	400	—	—	—	—	—	—	—	—	—	—	115	40
	380-60	342	418	13	494.5	700	688.6	1667.6	600	—	—	—	—	—	—	—	—	—	—	115	40
240	230-60	207	253	13	910.0	1200	1211.8	—	1200	—	—	—	—	—	—	—	—	—	—	115	40
	200-60	187	220	13	1001.1	1200	1371.8	—	1200	—	—	—	—	—	—	—	—	—	—	115	40
	460-60	414	506	13	455.0	600	605.9	1413.9	600	—	—	—	—	—	—	—	—	—	—	115	40
	575-60	518	633	13	349.6	450	478.7	1124.7	400	—	—	—	—	—	—	—	—	—	—	115	40
	380-60	342	418	13	529.5	700	723.5	1702.5	600	—	—	—	—	—	—	—	—	—	—	115	40
260	460-60	414	506	15	516.5	700	777.6	1999.6	600	—	—	—	—	—	—	—	—	—	—	115	40
	575-60	518	633	15	396.4	500	616.2	1594.2	450	—	—	—	—	—	—	—	—	—	—	115	40
	380-60	342	418	15	600.2	800	933.9	2412.9	700	—	—	—	—	—	—	—	—	—	—	115	40
280	460-60	414	506	16	549.7	800	810.9	2032.9	700	—	—	—	—	—	—	—	—	—	—	115	40
	575-60	518	633	16	422.1	600	641.9	1619.9	500	—	—	—	—	—	—	—	—	—	—	115	40
	380-60	342	418	16	638.7	800	972.4	2451.4	800	—	—	—	—	—	—	—	—	—	—	115	40
300	460-60	414	506	16	610.9	800	810.9	2032.9	700	—	—	—	—	—	—	—	—	—	—	115	40
	575-60	518	633	16	468.7	600	641.9	1619.9	600	—	—	—	—	—	—	—	—	—	—	115	40
	380-60	342	418	16	710.3	1000	972.4	2451.4	800	—	—	—	—	—	—	—	—	—	—	115	40
325	460-60	414	506	18	624.3	800	885.5	2107.5	700	—	—	—	—	—	—	—	—	—	—	115	40
	575-60	518	633	18	479.1	600	698.9	1676.9	600	—	—	—	—	—	—	—	—	—	—	115	40
	380-60	342	418	18	724.7	1000	1058.4	2537.4	800	—	—	—	—	—	—	—	—	—	—	115	40
350	460-60	414	506	18	685.5	800	885.5	2107.5	800	—	—	—	—	—	—	—	—	—	—	115	40
	575-60	518	633	18	525.7	700	698.9	1676.9	600	—	—	—	—	—	—	—	—	—	—	115	40
	380-60	342	418	18	796.3	1000	1058.4	2537.4	1000	—	—	—	—	—	—	—	—	—	—	115	40
400	460-60	414	506	20	746.6	1000	1007.8	2229.8	1000	—	—	—	—	—	—	—	—	—	—	115	50
	575-60	518	633	20	573.2	700	793.1	1771.1	700	—	—	—	—	—	—	—	—	—	—	115	50
	380-60	342	418	20	867.6	1000	1201.3	2680.3	1000	—	—	—	—	—	—	—	—	—	—	115	50
450	460-60	414	506	22	880.0	1000	1080.0	2302.0	1000	—	—	—	—	—	—	—	—	—	—	115	50
	575-60	518	633	22	674.6	800	847.8	1825.8	800	—	—	—	—	—	—	—	—	—	—	115	50
	380-60	342	418	22	1022.7	1200	1284.8	2763.8	1200	—	—	—	—	—	—	—	—	—	—	115	50
500	460-60	414	506	22	931.3	1200	1131.3	2353.3	1200	—	—	—	—	—	—	—	—	—	—	115	50
	575-60	518	633	22	714.1	800	887.3	1865.3	800	—	—	—	—	—	—	—	—	—	—	115	50
	380-60	342	418	22	1082.4	1200	1344.5	2823.5	1200	—	—	—	—	—	—	—	—	—	—	115	50

LEGEND

ICF — Instantaneous Current Flow
MCA — Minimum Circuit Amps
MOCP — Maximum Overcurrent Protection
WD — Wye-Delta
XL — Across-the-Line

NOTES:

1. Units are suitable for use on electrical systems where voltage supplied to the unit terminals is not below or above the listed minimum and maximum limits. Maximum allowable phase imbalance is: voltage, 2%; amps 10%.
2. Cooler heater is wired into the control circuit so it is always operable as long as the control power supply disconnect is on, even if any safety device is open.
3. For MCA that is less than or equal to 380 amps, 3 conductors are required.
   For MCA between 381-760 amps, 6 conductors are required.
   For MCA between 761-1140 amps, 9 conductors are required.
   For MCA between 1141-1520 amps, 12 conductors are required.
   Calculation of conductors required is based on 75 C copper wire.
4. Wiring for main field supply must be rated 75 C minimum. Use copper for all units.
   a. Incoming wire size range for the terminal block is no. 4 AWG (American Wire Gage) to 500 kcmil.
   b. Incoming wire size range of non-fused disconnect with MCA up to 599.9 amps is 3/0 to 500 kcmil.
   c. Incoming wire size range of non-fused disconnect with MCA from 600 to 799.9 amps is 1/0 to 500 kcmil.
   d. Incoming wire size range of non-fused disconnect with MCA from 800 to 1199.9 amps is 250 kcmil to 500 kcmil.
5. Data provided circuit 1/circuit 2 where there are two circuits.

SINGLE POINT (STANDARD CONDENSER FAN MOTORS) (cont)

UNIT 30XA	UNIT VOLTAGE			NUMBER OF COND FANS	10 HP PUMP, 3450 RPM					15 HP PUMP, 3450 RPM					CONTROL CIRCUIT	
	V-Hz (3 Ph)	Supplied			MCA	MOCP	ICF		Rec Fuse Size	MCA	MOCP	ICF		Rec Fuse Size	Voltage 1 PH, 60 Hz	MCA and MOCP
		Min	Max				WD	XL				WD	XL			
080, 082	230-60	207	253	6	—	—	—	—	—	—	—	—	—	—	115	40
	200-60	187	220	6	—	—	—	—	—	—	—	—	—	—	115	40
	460-60	414	506	6	—	—	—	—	—	—	—	—	—	—	115	40
	575-60	518	633	6	—	—	—	—	—	—	—	—	—	—	115	40
	380-60	342	418	6	—	—	—	—	—	—	—	—	—	—	115	40
090, 092	230-60	207	253	8	364.4	450	529.5	1215.5	400	379.0	500	544.1	1230.1	450	115	40
	200-60	187	220	8	401.6	500	599.6	1388.6	450	417.7	500	615.8	1404.8	500	115	40
	460-60	414	506	8	182.2	225	264.8	607.8	200	189.5	250	272.1	615.1	225	115	40
	575-60	518	633	8	140.6	175	209.9	483.9	175	146.5	175	215.8	489.8	175	115	40
	380-60	342	418	8	212.9	250	317.0	732.0	250	221.8	250	325.8	740.8	250	115	40
100, 102	230-60	207	253	8	395.0	500	567.1	1309.1	450	409.6	500	581.7	1323.7	450	115	40
	200-60	187	220	8	434.9	500	641.5	1495.5	500	451.1	600	657.6	1511.6	500	115	40
	460-60	414	506	8	197.5	250	283.6	654.6	225	204.8	250	290.9	661.9	225	115	40
	575-60	518	633	8	151.7	200	223.8	520.8	175	157.5	200	229.7	526.7	175	115	40
	380-60	342	418	8	231.1	300	340.1	789.1	300	239.9	300	348.9	797.9	300	115	40
110, 112	230-60	207	253	8	436.1	600	567.1	—	500	450.7	600	581.7	—	500	115	40
	200-60	187	220	8	479.9	600	641.5	—	600	496.0	600	657.6	—	600	115	40
	460-60	414	506	8	217.6	300	283.6	654.6	250	224.9	300	290.9	661.9	250	115	40
	575-60	518	633	8	167.7	225	223.8	520.8	200	173.5	225	229.7	526.7	200	115	40
	380-60	342	418	8	254.8	350	340.1	789.1	300	263.6	350	348.9	797.9	300	115	40
120, 122	230-60	207	253	8	469.0	600	600.0	—	600	483.6	600	614.6	—	600	115	40
	200-60	187	220	8	515.8	700	677.4	—	600	531.9	700	693.5	—	600	115	40
	460-60	414	506	8	233.6	300	299.6	670.6	300	240.9	300	306.9	677.9	300	115	40
	575-60	518	633	8	180.5	225	236.7	533.7	200	186.4	250	242.5	539.5	225	115	40
	380-60	342	418	8	273.7	350	359.0	808.0	300	282.6	350	367.9	816.9	350	115	40
140, 142	230-60	207	253	10	565.1	800	827.1	—	700	579.7	800	841.7	—	700	115	40
	200-60	187	220	10	622.1	800	939.7	—	700	638.2	800	955.9	—	800	115	40
	460-60	414	506	10	282.5	400	413.6	1045.6	350	289.8	400	420.9	1052.9	350	115	40
	575-60	518	633	10	217.1	300	327.6	833.6	250	223.0	300	333.5	839.5	250	115	40
	380-60	342	418	10	329.6	450	497.3	1262.3	400	338.5	450	506.2	1271.2	400	115	40
160, 162	230-60	207	253	10	651.5	800	1028.0	—	800	666.1	800	1042.6	—	800	115	40
	200-60	187	220	10	716.4	1000	1169.7	—	1000	732.6	1000	1185.8	—	1000	115	40
	460-60	414	506	10	324.9	450	513.6	1321.6	400	332.2	450	520.9	1328.9	400	115	40
	575-60	518	633	10	250.2	350	408.5	1054.5	300	256.1	350	414.3	1060.3	300	115	40
	380-60	342	418	10	379.5	500	617.3	1596.3	450	388.4	500	626.1	1605.1	450	115	40
180, 182	230-60	207	253	12	—	—	—	—	—	—	—	—	—	—	115	40
	200-60	187	220	12	—	—	—	—	—	—	—	—	—	—	115	40
	460-60	414	506	12	—	—	—	—	—	—	—	—	—	—	115	40
	575-60	518	633	12	—	—	—	—	—	—	—	—	—	—	115	40
	380-60	342	418	12	—	—	—	—	—	—	—	—	—	—	115	40
200, 202	230-60	207	253	12	—	—	—	—	—	—	—	—	—	—	115	40
	200-60	187	220	12	—	—	—	—	—	—	—	—	—	—	115	40
	460-60	414	506	12	—	—	—	—	—	—	—	—	—	—	115	40
	575-60	518	633	12	—	—	—	—	—	—	—	—	—	—	115	40
	380-60	342	418	12	—	—	—	—	—	—	—	—	—	—	115	40
220	230-60	207	253	13	—	—	—	—	—	—	—	—	—	—	115	40
	200-60	187	220	13	—	—	—	—	—	—	—	—	—	—	115	40
	460-60	414	506	13	—	—	—	—	—	—	—	—	—	—	115	40
	575-60	518	633	13	—	—	—	—	—	—	—	—	—	—	115	40
	380-60	342	418	13	—	—	—	—	—	—	—	—	—	—	115	40
240	230-60	207	253	13	—	—	—	—	—	—	—	—	—	—	115	40
	200-60	187	220	13	—	—	—	—	—	—	—	—	—	—	115	40
	460-60	414	506	13	—	—	—	—	—	—	—	—	—	—	115	40
	575-60	518	633	13	—	—	—	—	—	—	—	—	—	—	115	40
	380-60	342	418	13	—	—	—	—	—	—	—	—	—	—	115	40
260	460-60	414	506	15	—	—	—	—	—	—	—	—	—	—	115	40
	575-60	518	633	15	—	—	—	—	—	—	—	—	—	—	115	40
	380-60	342	418	15	—	—	—	—	—	—	—	—	—	—	115	40
280	460-60	414	506	16	—	—	—	—	—	—	—	—	—	—	115	40
	575-60	518	633	16	—	—	—	—	—	—	—	—	—	—	115	40
	380-60	342	418	16	—	—	—	—	—	—	—	—	—	—	115	40
300	460-60	414	506	16	—	—	—	—	—	—	—	—	—	—	115	40
	575-60	518	633	16	—	—	—	—	—	—	—	—	—	—	115	40
	380-60	342	418	16	—	—	—	—	—	—	—	—	—	—	115	40
325	460-60	414	506	18	—	—	—	—	—	—	—	—	—	—	115	40
	575-60	518	633	18	—	—	—	—	—	—	—	—	—	—	115	40
	380-60	342	418	18	—	—	—	—	—	—	—	—	—	—	115	40
350	460-60	414	506	18	—	—	—	—	—	—	—	—	—	—	115	40
	575-60	518	633	18	—	—	—	—	—	—	—	—	—	—	115	40
	380-60	342	418	18	—	—	—	—	—	—	—	—	—	—	115	40
400	460-60	414	506	20	—	—	—	—	—	—	—	—	—	—	115	50
	575-60	518	633	20	—	—	—	—	—	—	—	—	—	—	115	50
	380-60	342	418	20	—	—	—	—	—	—	—	—	—	—	115	50
450	460-60	414	506	22	—	—	—	—	—	—	—	—	—	—	115	50
	575-60	518	633	22	—	—	—	—	—	—	—	—	—	—	115	50
	380-60	342	418	22	—	—	—	—	—	—	—	—	—	—	115	50
500	460-60	414	506	22	—	—	—	—	—	—	—	—	—	—	115	50
	575-60	518	633	22	—	—	—	—	—	—	—	—	—	—	115	50
	380-60	342	418	22	—	—	—	—	—	—	—	—	—	—	115	50

LEGEND

ICF — Instantaneous Current Flow
MCA — Minimum Circuit Amps
MOCP — Maximum Overcurrent Protection
WD — Wye-Delta
XL — Across-the-Line

NOTES:

1. Units are suitable for use on electrical systems where voltage supplied to the unit terminals is not below or above the listed minimum and maximum limits. Maximum allowable phase imbalance is: voltage, 2%; amps 10%.
2. Cooler heater is wired into the control circuit so it is always operable as long as the control power supply disconnect is on, even if any safety device is open.
3. For MCA that is less than or equal to 380 amps, 3 conductors are required.
   For MCA between 381-760 amps, 6 conductors are required.
   For MCA between 761-1140 amps, 9 conductors are required.
   For MCA between 1141-1520 amps, 12 conductors are required.
   Calculation of conductors required is based on 75 C copper wire.
4. Wiring for main field supply must be rated 75 C minimum. Use copper for all units.
   a. Incoming wire size range for the terminal block is no. 4 AWG (American Wire Gage) to 500 kcmil.
   b. Incoming wire size range of non-fused disconnect with MCA up to 599.9 amps is 3/0 to 500 kcmil.
   c. Incoming wire size range of non-fused disconnect with MCA from 600 to 799.9 amps is 1/0 to 500 kcmil.
   d. Incoming wire size range of non-fused disconnect with MCA from 800 to 1199.9 amps is 250 kcmil to 500 kcmil.
5. Data provided circuit 1/circuit 2 where there are two circuits.

Electrical data (cont)

DUAL POINT (STANDARD CONDENSER FAN MOTORS)

UNIT 30XA	UNIT VOLTAGE			NUMBER OF COND FANS	NO HYDRONIC PACKAGE					5 HP PUMP, 3450 RPM					CONTROL CIRCUIT	
	V-Hz (3 Ph)	Supplied			MCA	MOCP	ICF		Rec Fuse Size	MCA	MOCP	ICF		Rec Fuse Size	Voltage 1 PH, 60 Hz	MCA and MOCP
		Min	Max				WD	XL				WD	XL			
080, 082	230-60	207	253	3/3	173.3/173.3	250/ 250	342.0/342.0	1028.0/1028.0	225/225	—	—	—	—	—	115	40
	200-60	187	220	3/3	190.9/190.9	300/ 300	392.9/392.9	1181.9/1181.9	250/250	—	—	—	—	—	115	40
	460-60	414	506	3/3	86.6/ 86.6	125/ 125	171.0/171.0	514.0/ 514.0	110/110	—	—	—	—	—	115	40
	575-60	518	633	3/3	66.5/ 66.5	110/ 110	137.2/137.2	411.2/ 411.2	80/ 80	—	—	—	—	—	115	40
	380-60	342	418	3/3	100.7/100.7	150/ 150	206.9/206.9	621.9/ 621.9	125/125	—	—	—	—	—	115	40
090, 092	230-60	207	253	4/4	182.9/182.9	300/ 300	348.0/348.0	1034.0/1034.0	225/225	182.9/198.9	300/300	348.0/364.0	1034.0/1050.0	225/250	115	40
	200-60	187	220	4/4	201.5/201.5	300/ 300	399.5/399.5	1188.5/1188.5	250/250	201.5/219.2	300/350	399.5/417.2	1188.5/1206.2	250/300	115	40
	460-60	414	506	4/4	91.4/ 91.4	150/ 150	174.0/174.0	517.0/ 517.0	110/110	91.4/ 99.4	150/150	174.0/182.0	517.0/ 525.0	110/125	115	40
	575-60	518	633	4/4	70.3/ 70.3	110/ 110	139.6/139.6	413.6/ 413.6	90/ 90	70.3/ 76.7	110/125	139.6/146.0	413.6/ 420.0	90/ 90	115	40
	380-60	342	418	4/4	106.5/106.5	175/ 175	210.5/210.5	625.5/ 625.5	125/125	106.5/116.1	175/175	210.5/220.2	625.5/ 635.2	125/150	115	40
100, 102	230-60	207	253	4/4	199.9/199.9	300/ 300	372.0/372.0	1114.0/1114.0	250/250	199.9/215.9	300/350	372.0/388.0	1114.0/1130.0	250/300	115	40
	200-60	187	220	4/4	220.0/220.0	350/ 350	426.5/426.5	1280.5/1280.5	300/300	220.0/237.7	350/350	426.5/444.2	1280.5/1298.2	300/300	115	40
	460-60	414	506	4/4	99.9/ 99.9	150/ 150	186.0/186.0	557.0/ 557.0	125/125	99.9/107.9	150/175	186.0/194.0	557.0/ 565.0	125/150	115	40
	575-60	518	633	4/4	76.4/ 76.4	125/ 125	148.6/148.6	445.6/ 445.6	90/ 90	76.4/ 82.8	125/125	148.6/155.0	445.6/ 452.0	90/100	115	40
	380-60	342	418	4/4	116.5/116.5	175/ 175	225.5/225.5	674.5/ 674.5	150/150	116.5/126.2	175/200	225.5/235.2	674.5/ 684.2	150/150	115	40
110, 112	230-60	207	253	4/4	241.0/199.9	400/ 300	372.0/372.0	—	300/250	241.0/215.9	400/350	372.0 /388.0	—	300/300	115	40
	200-60	187	220	4/4	264.9/220.0	450/ 350	426.5/426.5	—	350/300	264.9/237.7	450/350	426.5/444.2	—	350/300	115	40
	460-60	414	506	4/4	120.0/ 99.9	200/ 150	186.0/186.0	557.0/557.0	150/125	120.0/107.9	200/175	186.0/194.0	557.0/ 565.0	150/150	115	40
	575-60	518	633	4/4	92.5/ 76.4	150/ 125	148.6/148.6	445.6/445.6	110/ 90	92.5/ 82.8	150/125	148.6/155.0	445.6/ 452.0	110/100	115	40
	380-60	342	418	4/4	140.2/116.5	225/ 175	225.5/225.5	674.5/674.5	175/150	140.2/126.2	225/200	225.5/235.2	674.5/ 684.2	175/150	115	40
120, 122	230-60	207	253	4/4	241.0/241.0	400/ 400	372.0/372.0	—	300/300	241.0/257.0	400/400	372.0/388.0	—	300/350	115	40
	200-60	187	220	4/4	264.9/264.9	450/ 450	426.5/426.5	—	350/350	264.9/282.6	450/450	426.5/444.2	—	350/350	115	40
	460-60	414	506	4/4	120.0/120.0	200/ 200	186.0/186.0	557.0/557.0	150/150	120.0/128.0	200/200	186.0/194.0	557.0/ 565.0	150/150	115	40
	575-60	518	633	4/4	92.5/ 92.5	150/ 150	148.6/148.6	445.6/445.6	110/110	92.5/ 98.9	150/150	148.6/155.0	445.6/ 452.0	110/125	115	40
	380-60	342	418	4/4	140.2/140.2	225/ 225	225.5/225.5	674.5/674.5	175/175	140.2/149.9	225/250	225.5/235.2	674.5/ 684.2	175/200	115	40
140, 142	230-60	207	253	6/4	370.0/199.9	600/ 300	632.0/372.0	—	450/250	370.0/215.9	600/350	632.0/388.0	—	450/300	115	40
	200-60	187	220	6/4	407.2/220.0	700/ 350	724.8/426.5	—	500/300	407.2/237.7	700/350	724.8/444.2	—	500/300	115	40
	460-60	414	506	6/4	185.0/ 99.9	300/ 150	316.0/186.0	948.0/557.0	225/125	185.0/107.9	300/175	316.0/194.0	948.0/ 565.0	225/150	115	40
	575-60	518	633	6/4	141.9/ 76.4	225/ 125	252.4/148.6	758.4/445.6	175/ 90	141.9/ 82.8	225/125	252.4/155.0	758.4/ 452.0	175/100	115	40
	380-60	342	418	6/4	215.1/116.5	350/ 175	382.8/225.5	1147.8/674.5	300/150	215.1/126.2	350/200	382.8/235.2	1147.8/ 684.2	300/150	115	40
160, 162	230-60	207	253	6/4	423.5/241.0	700/ 400	800.0/372.0	—	600/300	423.5/257.0	700/400	800.0/388.0	—	600/350	115	40
	200-60	187	220	6/4	465.6/264.9	800/ 450	918.8/426.5	—	600/350	465.6/282.6	800/450	918.8/444.2	—	600/350	115	40
	460-60	414	506	6/4	211.3/120.0	350/ 200	400.0/186.0	1208.0/557.0	250/150	211.3/128.0	350/200	400.0/194.0	1208.0/ 565.0	250/150	115	40
	575-60	518	633	6/4	162.2/ 92.5	250/ 150	320.4/148.6	966.4/445.6	200/110	162.2/ 98.9	250/150	320.4/155.0	966.4/ 452.0	200/125	115	40
	380-60	342	418	6/4	246.0/140.2	400/ 225	483.8/225.5	1462.8/674.5	300/175	246.0/149.9	400/250	483.8/235.2	1462.8/ 684.2	300/200	115	40
180, 182	230-60	207	253	6/6	370.0/370.0	600/ 600	632.0/632.0	—	450/450	—	—	—	—	—	115	40
	200-60	187	220	6/6	407.2/407.2	700/ 700	724.8/724.8	—	500/500	—	—	—	—	—	115	40
	460-60	414	506	6/6	185.0/185.0	300/ 300	316.0/316.0	948.0/ 948.0	225/225	—	—	—	—	—	115	40
	575-60	518	633	6/6	141.9/141.9	225/ 225	252.4/252.4	758.4/ 758.4	175/175	—	—	—	—	—	115	40
	380-60	342	418	6/6	215.1/215.1	350/ 350	382.8/382.8	1147.8/1147.8	300/300	—	—	—	—	—	115	40
200, 202	230-60	207	253	6/6	423.5/423.5	700/ 700	800.0/800.0	—	600/600	—	—	—	—	—	115	40
	200-60	187	220	6/6	465.6/465.6	800/ 800	918.8/918.8	—	600/600	—	—	—	—	—	115	40
	460-60	414	506	6/6	211.3/211.3	350/ 350	400.0/400.0	1208.0/1208.0	250/250	—	—	—	—	—	115	40
	575-60	518	633	6/6	162.2/162.2	250/ 250	320.4/320.4	966.4/ 966.4	200/200	—	—	—	—	—	115	40
	380-60	342	418	6/6	246.0/246.0	400/ 400	483.8/483.8	1462.8/1462.8	300/300	—	—	—	—	—	115	40
220	230-60	207	253	7/6	504.2/423.5	800/ 700	806.0/800.0	—	600/600	—	—	—	—	—	115	40
	200-60	187	220	7/6	554.7/465.6	800/ 800	925.4/918.8	—	700/600	—	—	—	—	—	115	40
	460-60	414	506	7/6	252.1/211.3	400/ 350	403.0/400.0	1211.0/1208.0	300/250	—	—	—	—	—	115	40
	575-60	518	633	7/6	193.7/162.2	300/ 250	322.8/320.4	968.8/ 966.4	250/200	—	—	—	—	—	115	40
	380-60	342	418	7/6	293.3/246.0	500/ 400	487.4/483.8	1466.4/1462.8	350/300	—	—	—	—	—	115	40
240	230-60	207	253	7/6	504.2/498.2	800/ 800	806.0/800.0	—	600/600	—	—	—	—	—	115	40
	200-60	187	220	7/6	554.7/548.0	800/ 800	925.4/918.8	—	700/700	—	—	—	—	—	115	40
	460-60	414	506	7/6	252.1/249.1	400/ 400	403.0/400.0	1211.0/1208.0	300/300	—	—	—	—	—	115	40
	575-60	518	633	7/6	193.7/191.3	300/ 300	322.8/320.4	968.8/ 966.4	250/250	—	—	—	—	—	115	40
	380-60	342	418	7/6	293.3/289.7	500/ 500	487.4/483.8	1466.4/1462.8	350/350	—	—	—	—	—	115	40
260	460-60	414	506	9/6	343.9/211.3	500/ 350	605.0/400.0	1827.0/1208.0	450/250	—	—	—	—	—	115	40
	575-60	518	633	9/6	263.8/162.2	450/ 250	483.6/320.4	1461.6/ 966.4	350/200	—	—	—	—	—	115	40
	380-60	342	418	9/6	399.0/246.0	600/ 400	732.7/483.8	2211.7/1462.8	500/300	—	—	—	—	—	115	40
280	460-60	414	506	9/7	343.9/252.1	500/ 400	605.0/403.0	1827.0/1211.0	450/300	—	—	—	—	—	115	40
	575-60	518	633	9/7	263.8/193.7	450/ 300	483.6/322.8	1461.6/ 968.8	350/250	—	—	—	—	—	115	40
	380-60	342	418	9/7	399.0/293.3	600/ 500	732.7/487.4	2211.7/1466.4	500/350	—	—	—	—	—	115	40
300	460-60	414	506	10/6	408.0/249.1	700/ 400	608.0/400.0	1830.0/1208.0	500/300	—	—	—	—	—	115	40
	575-60	518	633	10/6	312.8/191.3	500/ 300	486.0/320.4	1464.0/ 966.4	400/250	—	—	—	—	—	115	40
	380-60	342	418	10/6	474.2/289.7	800/ 500	736.3/483.8	2215.3/1462.8	600/350	—	—	—	—	—	115	40
325	460-60	414	506	9/9	343.9/343.9	500/ 500	605.0/605.0	1827.0/1827.0	450/450	—	—	—	—	—	115	40
	575-60	518	633	9/9	263.8/263.8	450/ 450	483.6/483.6	1461.6/1461.6	350/350	—	—	—	—	—	115	40
	380-60	342	418	9/9	399.0/399.0	600/ 600	732.7/732.7	2211.7/2211.7	500/500	—	—	—	—	—	115	40
350	460-60	414	506	9/9	405.0/343.9	700/ 500	605.0/605.0	1827.0/1827.0	500/450	—	—	—	—	—	115	40
	575-60	518	633	9/9	310.4/263.8	500/ 450	483.6/483.6	1461.6/1461.6	400/350	—	—	—	—	—	115	40
	380-60	342	418	9/9	470.5/399.0	800/ 600	732.7/732.7	2211.7/2211.7	600/500	—	—	—	—	—	115	40
400	460-60	414	506	8/12	340.9/452.0	500/ 600	602.0/602.9	1824.0/1410.9	450/500	—	—	—	—	—	115	50
	575-60	518	633	8/12	261.4/347.2	450/ 450	481.2/476.3	1459.2/1122.3	350/400	—	—	—	—	—	115	50
	380-60	342	418	8/12	395.4/525.8	600/ 700	729.1/719.9	2208.1/1698.9	500/600	—	—	—	—	—	115	50
450	460-60	414	506	8/14	402.0/553.6	700/ 800	602.0/753.6	1824.0/1975.6	500/700	—	—	—	—	—	115	50
	575-60	518	633	8/14	308.0/424.4	500/ 600	481.2/597.6	1459.2/1575.6	400/500	—	—	—	—	—	115	50
	380-60	342	418	8/14	466.9/643.3	800/ 800	729.1/905.5	2208.1/2384.5	600/800	—	—	—	—	—	115	50
500	460-60	414	506	8/14	402.0/604.9	700/ 800	602.0/804.9	1824.0/2026.9	500/700	—	—	—	—	—	115	50
	575-60	518	633	8/14	308.0/463.9	500/ 600	481.2/637.1	1459.2/1615.1	400/600	—	—	—	—	—	115	50
	380-60	342	418	8/14	466.9/703.0	800/1000	729.1/965.2	2208.1/2444.2	600/800	—	—	—	—	—	115	50

LEGEND

ICF — Instantaneous Current Flow
MCA — Minimum Circuit Amps
MOCP — Maximum Overcurrent Protection
WD — Wye-Delta
XL — Across-the-Line

NOTES:

1. Units are suitable for use on electrical systems where voltage supplied to the unit terminals is not below or above the listed minimum and maximum limits. Maximum allowable phase imbalance is: voltage, 2%; amps 10%.
2. Cooler heater is wired into the control circuit so it is always operable as long as the control power supply disconnect is on, even if any safety device is open.
3. For MCA that is less than or equal to 380 amps, 3 conductors are required.
   For MCA between 381-760 amps, 6 conductors are required.
   For MCA between 761-1140 amps, 9 conductors are required.
   For MCA between 1141-1520 amps, 12 conductors are required.
   Calculation of conductors required is based on 75 C copper wire.
4. Wiring for main field supply must be rated 75 C minimum. Use copper for all units.
   a. Incoming wire size range for the terminal block is no. 4 AWG (American Wire Gage) to 500 kcmil.
   b. Incoming wire size range of non-fused disconnect with MCA up to 599.9 amps is 3/0 to 500 kcmil.
   c. Incoming wire size range of non-fused disconnect with MCA from 600 to 799.9 amps is 1/0 to 500 kcmil.
   d. Incoming wire size range of non-fused disconnect with MCA from 800 to 1199.9 amps is 250 kcmil to 500 kcmil.
5. Data provided circuit 1/circuit 2 where there are two circuits.

DUAL POINT (STANDARD CONDENSER FAN MOTORS) (cont)

UNIT 30XA	UNIT VOLTAGE			NUMBER OF COND FANS	7.5 HP PUMP, 3450 RPM					10 HP PUMP, 3450 RPM					CONTROL CIRCUIT	
	V-Hz (3 Ph)	Supplied			MCA	MOCP	ICF		Rec Fuse Size	MCA	MOCP	ICF		Rec Fuse Size	Voltage 1 PH, 60 Hz	MCA and MOCP
		Min	Max				WD	XL				WD	XL			
080, 082	230-60	207	253	3/3	—	—	—	—	—	—	—	—	—	—	115	40
	200-60	187	220	3/3	—	—	—	—	—	—	—	—	—	—	115	40
	460-60	414	506	3/3	—	—	—	—	—	—	—	—	—	—	115	40
	575-60	518	633	3/3	—	—	—	—	—	—	—	—	—	—	115	40
	380-60	342	418	3/3	—	—	—	—	—	—	—	—	—	—	115	40
090, 092	230-60	207	253	4/4	182.9/206.1	300/300	348.0/371.2	1034.0/1057.2	225/250	182.9/213.3	300/300	348.0/378.4	1034.0/1064.4	225/250	115	40
	200-60	187	220	4/4	201.5/227.1	300/350	399.5/425.2	1188.5/1214.2	250/300	201.5/235.1	300/350	399.5/433.2	1188.5/1222.2	250/300	115	40
	460-60	414	506	4/4	91.4/103.0	150/150	174.0/185.6	517.0/ 528.6	110/125	91.4/106.6	150/150	174.0/189.2	517.0/ 532.2	110/125	115	40
	575-60	518	633	4/4	70.3/ 79.6	110/125	139.6/148.9	413.6/ 422.9	90/100	70.3/ 82.5	110/125	139.6/151.8	413.6/ 425.8	90/100	115	40
	380-60	342	418	4/4	106.5/120.5	175/175	210.5/224.6	625.5/ 639.6	125/150	106.5/124.9	175/175	210.5/228.9	625.5/ 643.9	125/150	115	40
100, 102	230-60	207	253	4/4	199.9/223.1	300/350	372.0/395.2	1114.0/1137.2	250/300	199.9/230.3	300/350	372.0/402.4	1114.0/1144.4	250/300	115	40
	200-60	187	220	4/4	220.0/245.7	350/400	426.5/452.2	1280.5/1306.2	300/300	220.0/253.6	350/400	426.5/460.2	1280.5/1314.2	300/300	115	40
	460-60	414	506	4/4	99.9/111.5	150/175	186.0/197.6	557.0/ 568.6	125/150	99.9/115.1	150/175	186.0/201.2	557.0/ 572.2	125/150	115	40
	575-60	518	633	4/4	76.4/ 85.7	125/125	148.6/157.9	445.6/ 454.9	90/100	76.4/ 88.6	125/125	148.6/160.8	445.6/ 457.8	90/110	115	40
	380-60	342	418	4/4	116.5/130.6	175/200	225.5/239.6	674.5/ 688.6	150/175	116.5/134.9	175/200	225.5/243.9	674.5/ 692.9	150/175	115	40
110, 112	230-60	207	253	4/4	241.0/223.1	400/350	372.0/395.2	—	300/300	241.0/230.3	400/350	372.0/402.4	—	300/300	115	40
	200-60	187	220	4/4	264.9/245.7	450/400	426.5/452.2	—	350/300	264.9/253.6	450/400	426.5/460.2	—	350/300	115	40
	460-60	414	506	4/4	120.0/111.5	200/175	186.0/197.6	557.0/ 568.6	150/150	120.0/115.1	200/175	186.0/201.2	557.0/ 572.2	150/150	115	40
	575-60	518	633	4/4	92.5/ 85.7	150/125	148.6/157.9	445.6/ 454.9	110/100	92.5/ 88.6	150/125	148.6/160.8	445.6/ 457.8	110/110	115	40
	380-60	342	418	4/4	140.2/130.6	225/200	225.5/239.6	674.5/ 688.6	175/175	140.2/134.9	225/200	225.5/243.9	674.5/ 692.9	175/175	115	40
120, 122	230-60	207	253	4/4	241.0/264.2	400/400	372.0/395.2	—	300/350	241.0/271.4	400/400	372.0/402.4	—	300/350	115	40
	200-60	187	220	4/4	264.9/290.6	450/450	426.5/452.2	—	350/350	264.9/298.5	450/450	426.5/460.2	—	350/350	115	40
	460-60	414	506	4/4	120.0/131.6	200/200	186.0/197.6	557.0/ 568.6	150/175	120.0/135.2	200/200	186.0/201.2	557.0/ 572.2	150/175	115	40
	575-60	518	633	4/4	92.5/101.8	150/150	148.6/157.9	445.6/ 454.9	110/125	92.5/104.6	150/150	148.6/160.8	445.6/ 457.8	110/125	115	40
	380-60	342	418	4/4	140.2/154.3	225/250	225.5/239.6	674.5/ 688.6	175/200	140.2/158.6	225/250	225.5/243.9	674.5/ 692.9	175/200	115	40
140, 142	230-60	207	253	6/4	370.0/223.1	600/350	632.0/395.2	—	450/300	370.0/230.3	600/350	632.0/402.4	—	450/300	115	40
	200-60	187	220	6/4	407.2/245.7	700/400	724.8/452.2	—	500/300	407.2/253.6	700/400	724.8/460.2	—	500/300	115	40
	460-60	414	506	6/4	185.0/111.5	300/175	316.0/197.6	948.0/ 568.6	225/150	185.0/115.1	300/175	316.0/201.2	948.0/ 572.2	225/150	115	40
	575-60	518	633	6/4	141.9/ 85.7	225/125	252.4/157.9	758.4/ 454.9	175/100	141.9/ 88.6	225/125	252.4/160.8	758.4/ 457.8	175/110	115	40
	380-60	342	418	6/4	215.1/130.6	350/200	382.8/239.6	1147.8/ 688.6	300/175	215.1/134.9	350/200	382.8/243.9	1147.8/ 692.9	300/175	115	40
160, 162	230-60	207	253	6/4	423.5/264.2	700/400	800.0/395.2	—	600/350	423.5/271.4	700/400	800.0/402.4	—	600/350	115	40
	200-60	187	220	6/4	465.6/290.6	800/450	918.8/452.2	—	600/350	465.6/298.5	800/450	918.8/460.2	—	600/350	115	40
	460-60	414	506	6/4	211.3/131.6	350/200	400.0/197.6	1208.0/ 568.6	250/175	211.3/135.2	350/200	400.0/201.2	1208.0/ 572.2	250/175	115	40
	575-60	518	633	6/4	162.2/101.8	250/150	320.4/157.9	966.4/ 454.9	200/125	162.2/104.6	250/150	320.4/160.8	966.4/ 457.8	200/125	115	40
	380-60	342	418	6/4	246.0/154.3	400/250	483.8/239.6	1462.8/ 688.6	300/200	246.0/158.6	400/250	483.8/243.9	1462.8/ 692.9	300/200	115	40
180, 182	230-60	207	253	6/6	—	—	—	—	—	—	—	—	—	—	115	40
	200-60	187	220	6/6	—	—	—	—	—	—	—	—	—	—	115	40
	460-60	414	506	6/6	—	—	—	—	—	—	—	—	—	—	115	40
	575-60	518	633	6/6	—	—	—	—	—	—	—	—	—	—	115	40
	380-60	342	418	6/6	—	—	—	—	—	—	—	—	—	—	115	40
200, 202	230-60	207	253	6/6	—	—	—	—	—	—	—	—	—	—	115	40
	200-60	187	220	6/6	—	—	—	—	—	—	—	—	—	—	115	40
	460-60	414	506	6/6	—	—	—	—	—	—	—	—	—	—	115	40
	575-60	518	633	6/6	—	—	—	—	—	—	—	—	—	—	115	40
	380-60	342	418	6/6	—	—	—	—	—	—	—	—	—	—	115	40
220	230-60	207	253	7/6	—	—	—	—	—	—	—	—	—	—	115	40
	200-60	187	220	7/6	—	—	—	—	—	—	—	—	—	—	115	40
	460-60	414	506	7/6	—	—	—	—	—	—	—	—	—	—	115	40
	575-60	518	633	7/6	—	—	—	—	—	—	—	—	—	—	115	40
	380-60	342	418	7/6	—	—	—	—	—	—	—	—	—	—	115	40
240	230-60	207	253	7/6	—	—	—	—	—	—	—	—	—	—	115	40
	200-60	187	220	7/6	—	—	—	—	—	—	—	—	—	—	115	40
	460-60	414	506	7/6	—	—	—	—	—	—	—	—	—	—	115	40
	575-60	518	633	7/6	—	—	—	—	—	—	—	—	—	—	115	40
	380-60	342	418	7/6	—	—	—	—	—	—	—	—	—	—	115	40
260	460-60	414	506	9/6	—	—	—	—	—	—	—	—	—	—	115	40
	575-60	518	633	9/6	—	—	—	—	—	—	—	—	—	—	115	40
	380-60	342	418	9/6	—	—	—	—	—	—	—	—	—	—	115	40
280	460-60	414	506	9/7	—	—	—	—	—	—	—	—	—	—	115	40
	575-60	518	633	9/7	—	—	—	—	—	—	—	—	—	—	115	40
	380-60	342	418	9/7	—	—	—	—	—	—	—	—	—	—	115	40
300	460-60	414	506	10/6	—	—	—	—	—	—	—	—	—	—	115	40
	575-60	518	633	10/6	—	—	—	—	—	—	—	—	—	—	115	40
	380-60	342	418	10/6	—	—	—	—	—	—	—	—	—	—	115	40
325	460-60	414	506	9/9	—	—	—	—	—	—	—	—	—	—	115	40
	575-60	518	633	9/9	—	—	—	—	—	—	—	—	—	—	115	40
	380-60	342	418	9/9	—	—	—	—	—	—	—	—	—	—	115	40
350	460-60	414	506	9/9	—	—	—	—	—	—	—	—	—	—	115	40
	575-60	518	633	9/9	—	—	—	—	—	—	—	—	—	—	115	40
	380-60	342	418	9/9	—	—	—	—	—	—	—	—	—	—	115	40
400	460-60	414	506	8/12	—	—	—	—	—	—	—	—	—	—	115	50
	575-60	518	633	8/12	—	—	—	—	—	—	—	—	—	—	115	50
	380-60	342	418	8/12	—	—	—	—	—	—	—	—	—	—	115	50
450	460-60	414	506	8/14	—	—	—	—	—	—	—	—	—	—	115	50
	575-60	518	633	8/14	—	—	—	—	—	—	—	—	—	—	115	50
	380-60	342	418	8/14	—	—	—	—	—	—	—	—	—	—	115	50
500	460-60	414	506	8/14	—	—	—	—	—	—	—	—	—	—	115	50
	575-60	518	633	8/14	—	—	—	—	—	—	—	—	—	—	115	50
	380-60	342	418	8/14	—	—	—	—	—	—	—	—	—	—	115	50

LEGEND

ICF — Instantaneous Current Flow
MCA — Minimum Circuit Amps
MOCP — Maximum Overcurrent Protection
WD — Wye-Delta
XL — Across-the-Line

NOTES:

1. Units are suitable for use on electrical systems where voltage supplied to the unit terminals is not below or above the listed minimum and maximum limits. Maximum allowable phase imbalance is: voltage, 2%; amps 10%.
2. Cooler heater is wired into the control circuit so it is always operable as long as the control power supply disconnect is on, even if any safety device is open.
3. For MCA that is less than or equal to 380 amps, 3 conductors are required.
   For MCA between 381-760 amps, 6 conductors are required.
   For MCA between 761-1140 amps, 9 conductors are required.
   For MCA between 1141-1520 amps, 12 conductors are required.
   Calculation of conductors required is based on 75 C copper wire.
4. Wiring for main field supply must be rated 75 C minimum. Use copper for all units.
   a. Incoming wire size range for the terminal block is no. 4 AWG (American Wire Gage) to 500 kcmil.
   b. Incoming wire size range of non-fused disconnect with MCA up to 599.9 amps is 3/0 to 500 kcmil.
   c. Incoming wire size range of non-fused disconnect with MCA from 600 to 799.9 amps is 1/0 to 500 kcmil.
   d. Incoming wire size range of non-fused disconnect with MCA from 800 to 1199.9 amps is 250 kcmil to 500 kcmil.
5. Data provided circuit 1/circuit 2 where there are two circuits.

Electrical data (cont)

DUAL POINT (STANDARD CONDENSER FAN MOTORS) (cont)

UNIT 30XA	UNIT VOLTAGE			NUMBER OF COND FANS	15 HP PUMP, 3450 RPM					CONTROL CIRCUIT	
	V-Hz (3 Ph)	Supplied			MCA	MOCP	ICF		Rec Fuse Size	Voltage 1 PH, 60 Hz	MCA and MOCP
		Min	Max				WD	XL			
080,082	230-60	207	253	3/3	182.9/227.9	300/350	348.0/393.0	1034.0/1079.0	225/300	115	40
	200-60	187	220	3/3	201.5/251.2	300/350	399.5/449.3	1188.5/1238.3	250/300	115	40
	460-60	414	506	3/3	91.4/113.9	150/175	174.0/196.5	517.0/ 539.5	110/150	115	40
	575-60	518	633	3/3	70.3/ 88.3	110/125	139.6/157.6	413.6/ 431.6	90/110	115	40
	380-60	342	418	3/3	106.5/133.7	175/200	210.5/237.8	625.5/ 652.8	125/175	115	40
090,090	230-60	207	253	4/4	199.9/244.9	300/350	372.0/417.0	1114.0/1159.0	250/300	115	40
	200-60	187	220	4/4	220.0/269.8	350/400	426.5/476.3	1280.5/1330.3	300/350	115	40
	460-60	414	506	4/4	99.9/122.4	150/175	186.0/208.5	557.0/ 579.5	125/150	115	40
	575-60	518	633	4/4	76.4/ 94.4	125/125	148.6/166.6	445.6/ 463.6	90/110	115	40
	380-60	342	418	4/4	116.5/143.8	175/225	225.5/252.8	674.5/ 701.8	150/175	115	40
100,102	230-60	207	253	4/4	241.0/244.9	400/350	372.0/417.0	—	300/300	115	40
	200-60	187	220	4/4	264.9/269.8	450/400	426.5/476.3	—	350/350	115	40
	460-60	414	506	4/4	120.0/122.4	200/175	186.0/208.5	557.0/ 579.5	150/150	115	40
	575-60	518	633	4/4	92.5/ 94.4	150/125	148.6/166.6	445.6/ 463.6	110/110	115	40
	380-60	342	418	4/4	140.2/143.8	225/225	225.5/252.8	674.5/ 701.8	175/175	115	40
110,112	230-60	207	253	4/4	241.0/286.0	400/450	372.0/417.0	—	300/350	115	40
	200-60	187	220	4/4	264.9/314.7	450/500	426.5/476.3	—	350/400	115	40
	460-60	414	506	4/4	120.0/142.5	200/225	186.0/208.5	557.0/ 579.5	150/175	115	40
	575-60	518	633	4/4	92.5/110.5	150/175	148.6/166.6	445.6/ 463.6	110/150	115	40
	380-60	342	418	4/4	140.2/167.5	225/250	225.5/252.8	674.5/ 701.8	175/200	115	40
120,122	230-60	207	253	4/4	370.0/244.9	600/350	632.0/417.0	—	450/300	115	40
	200-60	187	220	4/4	407.2/269.8	700/400	724.8/476.3	—	500/350	115	40
	460-60	414	506	4/4	185.0/122.4	300/175	316.0/208.5	948.0/ 579.5	225/150	115	40
	575-60	518	633	4/4	141.9/ 94.4	225/125	252.4/166.6	758.4/ 463.6	175/110	115	40
	380-60	342	418	4/4	215.1/143.8	350/225	382.8/252.8	1147.8/ 701.8	300/175	115	40
140,142	230-60	207	253	6/4	423.5/286.0	700/450	800.0/417.0	—	600/350	115	40
	200-60	187	220	6/4	465.6/314.7	800/500	918.8/476.3	—	600/400	115	40
	460-60	414	506	6/4	211.3/142.5	350/225	400.0/208.5	1208.0/ 579.5	250/175	115	40
	575-60	518	633	6/4	162.2/110.5	250/175	320.4/166.6	966.4/ 463.6	200/150	115	40
	380-60	342	418	6/4	246.0/167.5	400/250	483.8/252.8	1462.8/ 701.8	300/200	115	40
160,162	230-60	207	253	6/4	—	—	—	—	—	115	40
	200-60	187	220	6/4	—	—	—	—	—	115	40
	460-60	414	506	6/4	—	—	—	—	—	115	40
	575-60	518	633	6/4	—	—	—	—	—	115	40
	380-60	342	418	6/4	—	—	—	—	—	115	40
180,182	230-60	207	253	6/6	—	—	—	—	—	115	40
	200-60	187	220	6/6	—	—	—	—	—	115	40
	460-60	414	506	6/6	—	—	—	—	—	115	40
	575-60	518	633	6/6	—	—	—	—	—	115	40
	380-60	342	418	6/6	—	—	—	—	—	115	40
200,202	230-60	207	253	6/6	—	—	—	—	—	115	40
	200-60	187	220	6/6	—	—	—	—	—	115	40
	460-60	414	506	6/6	—	—	—	—	—	115	40
	575-60	518	633	6/6	—	—	—	—	—	115	40
	380-60	342	418	6/6	—	—	—	—	—	115	40
220	230-60	207	253	7/6	—	—	—	—	—	115	40
	200-60	187	220	7/6	—	—	—	—	—	115	40
	460-60	414	506	7/6	—	—	—	—	—	115	40
	575-60	518	633	7/6	—	—	—	—	—	115	40
	380-60	342	418	7/6	—	—	—	—	—	115	40
240	230-60	207	253	7/6	—	—	—	—	—	115	40
	200-60	187	220	7/6	—	—	—	—	—	115	40
	460-60	414	506	7/6	—	—	—	—	—	115	40
	575-60	518	633	7/6	—	—	—	—	—	115	40
	380-60	342	418	7/6	—	—	—	—	—	115	40
260	460-60	414	506	9/6	—	—	—	—	—	115	40
	575-60	518	633	9/6	—	—	—	—	—	115	40
	380-60	342	418	9/6	—	—	—	—	—	115	40
280	460-60	414	506	9/7	—	—	—	—	—	115	40
	575-60	518	633	9/7	—	—	—	—	—	115	40
	380-60	342	418	9/7	—	—	—	—	—	115	40
300	460-60	414	506	10/6	—	—	—	—	—	115	40
	575-60	518	633	10/6	—	—	—	—	—	115	40
	380-60	342	418	10/6	—	—	—	—	—	115	40
325	460-60	414	506	9/9	—	—	—	—	—	115	40
	575-60	518	633	9/9	—	—	—	—	—	115	40
	380-60	342	418	9/9	—	—	—	—	—	115	40
350	460-60	414	506	9/9	—	—	—	—	—	115	40
	575-60	518	633	9/9	—	—	—	—	—	115	40
	380-60	342	418	9/9	—	—	—	—	—	115	40
400	460-60	414	506	8/12	—	—	—	—	—	115	50
	575-60	518	633	8/12	—	—	—	—	—	115	50
	380-60	342	418	8/12	—	—	—	—	—	115	50
450	460-60	414	506	8/14	—	—	—	—	—	115	50
	575-60	518	633	8/14	—	—	—	—	—	115	50
	380-60	342	418	8/14	—	—	—	—	—	115	50
500	460-60	414	506	8/14	—	—	—	—	—	115	50
	575-60	518	633	8/14	—	—	—	—	—	115	50
	380-60	342	418	8/14	—	—	—	—	—	115	50

LEGEND

ICF — Instantaneous Current Flow
MCA — Minimum Circuit Amps
MOCP — Maximum Overcurrent Protection
WD — Wye-Delta
XL — Across-the-Line

NOTES:

1. Units are suitable for use on electrical systems where voltage supplied to the unit terminals is not below or above the listed minimum and maximum limits. Maximum allowable phase imbalance is: voltage, 2%; amps 10%.
2. Cooler heater is wired into the control circuit so it is always operable as long as the control power supply disconnect is on, even if any safety device is open.
3. For MCA that is less than or equal to 380 amps, 3 conductors are required.
   For MCA between 381-760 amps, 6 conductors are required.
   For MCA between 761-1140 amps, 9 conductors are required.
   For MCA between 1141-1520 amps, 12 conductors are required.
   Calculation of conductors required is based on 75 C copper wire.
4. Wiring for main field supply must be rated 75 C minimum. Use copper for all units.
   a. Incoming wire size range for the terminal block is no. 4 AWG (American Wire Gage) to 500 kcmil.
   b. Incoming wire size range of non-fused disconnect with MCA up to 599.9 amps is 3/0 to 500 kcmil.
   c. Incoming wire size range of non-fused disconnect with MCA from 600 to 799.9 amps is 1/0 to 500 kcmil.
   d. Incoming wire size range of non-fused disconnect with MCA from 800 to 1199.9 amps is 250 kcmil to 500 kcmil.
5. Data provided circuit 1/circuit 2 where there are two circuits.

SINGLE POINT (HIGH AMBIENT OPTION)

UNIT 30XA	UNIT VOLTAGE			NUMBER OF COND FANS	NO HYDRONIC PACKAGE					5 HP PUMP, 3450 RPM					7.5 HP PUMP, 3450 RPM					CONTROL CIRCUIT	
	V-Hz (3 Ph)	Supplied			MCA	MOCP	ICF		Rec Fuse Size	MCA	MOCP	ICF		Rec Fuse Size	MCA	MOCP	ICF		Rec Fuse Size	Voltage 1 PH, 60 Hz	MCA and MOCP
		Min	Max				WD	XL				WD	XL				WD	XL			
140, 142	230-60	207	253	10	562.0	800	838.9	—	700	578.0	800	854.9	—	700	585.2	800	862.1	—	700	115	40
	200-60	187	220	10	618.8	800	952.8	—	700	636.5	800	970.5	—	800	644.4	800	978.5	—	800	115	40
	460-60	414	506	10	281.0	400	419.5	1051.5	350	289.0	400	427.5	1059.5	350	292.6	400	431.1	1063.1	350	115	40
	575-60	518	633	10	216.3	300	332.5	838.5	250	222.7	300	338.9	844.9	250	225.6	300	341.8	847.8	250	115	40
	380-60	342	418	10	328.3	450	504.6	1269.6	400	338.0	450	514.3	1279.3	400	342.3	450	518.7	1283.7	400	115	40
160, 162	230-60	207	253	10	642.7	800	1036.7	—	800	658.7	800	1052.7	—	800	665.9	800	1059.9	—	800	115	40
	200-60	187	220	10	706.9	1000	1179.4	—	800	724.5	1000	1197.1	—	1000	732.5	1000	1205.0	—	1000	115	40
	460-60	414	506	10	320.5	450	518.0	1326.0	400	328.5	450	526.0	1334.0	400	332.1	450	529.6	1337.6	400	115	40
	575-60	518	633	10	247.2	350	412.1	1058.1	300	253.6	350	418.5	1064.5	300	256.5	350	421.4	1067.4	300	115	40
	380-60	342	418	10	374.9	500	622.8	1601.8	450	384.6	500	632.5	1611.5	450	388.9	500	636.8	1615.8	450	115	40
180, 182	230-60	207	253	12	703.9	800	980.8	—	800	—	—	—	—	—	—	—	—	—	—	115	40
	200-60	187	220	12	775.0	1000	1109.1	—	1000	—	—	—	—	—	—	—	—	—	—	115	40
	460-60	414	506	12	351.9	450	490.4	1122.4	400	—	—	—	—	—	—	—	—	—	—	115	40
	575-60	518	633	12	271.1	350	387.3	893.3	300	—	—	—	—	—	—	—	—	—	—	115	40
	380-60	342	418	12	410.8	500	587.2	1352.2	450	—	—	—	—	—	—	—	—	—	—	115	40
200, 202	230-60	207	253	12	795.6	1000	1189.6	—	1000	—	—	—	—	—	—	—	—	—	—	115	40
	200-60	187	220	12	875.0	1200	1347.5	—	1000	—	—	—	—	—	—	—	—	—	—	115	40
	460-60	414	506	12	396.9	500	594.4	1402.4	450	—	—	—	—	—	—	—	—	—	—	115	40
	575-60	518	633	12	305.8	400	470.7	1116.7	350	—	—	—	—	—	—	—	—	—	—	115	40
	380-60	342	418	12	463.8	600	711.7	1690.7	600	—	—	—	—	—	—	—	—	—	—	115	40
220	230-60	207	253	13	876.7	1200	1200.4	—	1000	—	—	—	—	—	—	—	—	—	—	115	40
	200-60	187	220	13	964.6	1200	1359.4	—	1200	—	—	—	—	—	—	—	—	—	—	115	40
	460-60	414	506	13	438.0	600	599.8	1407.8	500	—	—	—	—	—	—	—	—	—	—	115	40
	575-60	518	633	13	337.6	450	475.0	1121.0	400	—	—	—	—	—	—	—	—	—	—	115	40
	380-60	342	418	13	511.5	700	718.3	1697.3	600	—	—	—	—	—	—	—	—	—	—	115	40
240	230-60	207	253	13	933.0	1200	1256.7	—	1200	—	—	—	—	—	—	—	—	—	—	115	40
	200-60	187	220	13	1026.7	1200	1421.6	—	1200	—	—	—	—	—	—	—	—	—	—	115	40
	460-60	414	506	13	466.5	600	628.3	1436.3	600	—	—	—	—	—	—	—	—	—	—	115	40
	575-60	518	633	13	359.5	450	497.0	1143.0	400	—	—	—	—	—	—	—	—	—	—	115	40
	380-60	342	418	13	544.4	700	751.2	1730.2	600	—	—	—	—	—	—	—	—	—	—	115	40
260	460-60	414	506	15	529.1	700	806.6	2028.6	600	—	—	—	—	—	—	—	—	—	—	115	40
	575-60	518	633	15	407.4	500	639.7	1617.7	500	—	—	—	—	—	—	—	—	—	—	115	40
	380-60	342	418	15	616.7	800	969.3	2448.3	700	—	—	—	—	—	—	—	—	—	—	115	40
280	460-60	414	506	16	563.0	800	840.5	2062.5	700	—	—	—	—	—	—	—	—	—	—	115	40
	575-60	518	633	16	433.6	600	665.9	1643.9	500	—	—	—	—	—	—	—	—	—	—	115	40
	380-60	342	418	16	656.2	800	1008.8	2487.8	800	—	—	—	—	—	—	—	—	—	—	115	40
300	460-60	414	506	16	619.6	800	840.5	2062.5	700	—	—	—	—	—	—	—	—	—	—	115	40
	575-60	518	633	16	476.7	600	665.9	1643.9	600	—	—	—	—	—	—	—	—	—	—	115	40
	380-60	342	418	16	722.3	1000	1008.8	2487.8	1000	—	—	—	—	—	—	—	—	—	—	115	40
325	460-60	414	506	18	638.1	800	915.6	2137.6	700	—	—	—	—	—	—	—	—	—	—	115	40
	575-60	518	633	18	491.2	600	723.5	1701.5	600	—	—	—	—	—	—	—	—	—	—	115	40
	380-60	342	418	18	743.0	1000	1095.6	2574.6	1000	—	—	—	—	—	—	—	—	—	—	115	40
350	460-60	414	506	18	694.6	800	915.6	2137.6	800	—	—	—	—	—	—	—	—	—	—	115	40
	575-60	518	633	18	534.2	700	723.5	1701.5	600	—	—	—	—	—	—	—	—	—	—	115	40
	380-60	342	418	18	809.1	1000	1095.6	2574.6	1000	—	—	—	—	—	—	—	—	—	—	115	40
400	460-60	414	506	20	760.8	1000	1038.3	2260.3	1000	—	—	—	—	—	—	—	—	—	—	115	50
	575-60	518	633	20	585.7	700	818.1	1796.1	700	—	—	—	—	—	—	—	—	—	—	115	50
	380-60	342	418	20	886.5	1000	1239.1	2718.1	1000	—	—	—	—	—	—	—	—	—	—	115	50
450	460-60	414	506	22	889.1	1000	1110.0	2332.0	1000	—	—	—	—	—	—	—	—	—	—	115	50
	575-60	518	633	22	683.4	800	872.7	1850.7	800	—	—	—	—	—	—	—	—	—	—	115	50
	380-60	342	418	22	1035.9	1200	1322.4	2801.4	1200	—	—	—	—	—	—	—	—	—	—	115	50
500	460-60	414	506	22	937.6	1200	1158.5	2380.5	1200	—	—	—	—	—	—	—	—	—	—	115	50
	575-60	518	633	22	720.8	800	910.0	1888.0	800	—	—	—	—	—	—	—	—	—	—	115	50
	380-60	342	418	22	1092.4	1200	1378.8	2857.8	1200	—	—	—	—	—	—	—	—	—	—	115	50

LEGEND

ICF — Instantaneous Current Flow
MCA — Minimum Circuit Amps
MOCP — Maximum Overcurrent Protection
WD — Wye-Delta
XL — Across-the-Line

NOTES:

1. Units are suitable for use on electrical systems where voltage supplied to the unit terminals is not below or above the listed minimum and maximum limits. Maximum allowable phase imbalance is: voltage, 2%; amps 10%.
2. Cooler heater is wired into the control circuit so it is always operable as long as the control power supply disconnect is on, even if any safety device is open.
3. For MCA that is less than or equal to 380 amps, 3 conductors are required.
   For MCA between 381-760 amps, 6 conductors are required.
   For MCA between 761-1140 amps, 9 conductors are required.
   For MCA between 1141-1520 amps, 12 conductors are required.
   Calculation of conductors required is based on 75 C copper wire.
4. Wiring for main field supply must be rated 75 C minimum. Use copper for all units.
   a. Incoming wire size range for the terminal block is no. 4 AWG (American Wire Gage) to 500 kcmil.
   b. Incoming wire size range of non-fused disconnect with MCA up to 599.9 amps is 3/0 to 500 kcmil.
   c. Incoming wire size range of non-fused disconnect with MCA from 600 to 799.9 amps is 1/0 to 500 kcmil.
   d. Incoming wire size range of non-fused disconnect with MCA from 800 to 1199.9 amps is 250 kcmil to 500 kcmil.
5. Data provided circuit 1/circuit 2 where there are two circuits.

Electrical data (cont)

SINGLE POINT (HIGH AMBIENT OPTION) (cont)

UNIT 30XA	UNIT VOLTAGE			NUMBER OF COND FANS	10 HP PUMP, 3450 RPM					15 HP PUMP, 3450 RPM					CONTROL CIRCUIT	
	V-Hz (3 Ph)	Supplied			MCA	MOCP	ICF		Rec Fuse Size	MCA	MOCP	ICF		Rec Fuse Size	Voltage 1 PH, 60 Hz	MCA and MOCP
		Min	Max				WD	XL				WD	XL			
140, 142	230-60	207	253	10	592.4	800	869.3	—	700	607.0	800	883.9	—	700	115	40
	200-60	187	220	10	652.4	800	986.5	—	800	668.6	800	1002.6	—	800	115	40
	460-60	414	506	10	296.2	400	434.7	1066.7	350	303.5	400	442.0	1074.0	350	115	40
	575-60	518	633	10	228.4	300	344.6	850.6	300	234.3	300	350.5	856.5	300	115	40
	380-60	342	418	10	346.7	450	523.0	1288.0	400	355.5	500	531.9	1296.9	400	115	40
160, 162	230-60	207	253	10	673.1	800	1067.1	—	800	687.7	800	1081.7	—	800	115	40
	200-60	187	220	10	740.5	1000	1213.0	—	1000	756.6	1000	1229.1	—	1000	115	40
	460-60	414	506	10	335.7	450	533.2	1341.2	400	343.0	450	540.5	1348.5	400	115	40
	575-60	518	633	10	259.4	350	424.3	1070.3	300	265.2	350	430.1	1076.1	300	115	40
	380-60	342	418	10	393.3	500	641.2	1620.2	450	402.1	500	650.0	1629.0	450	115	40
180, 182	230-60	207	253	12	—	—	—	—	—	—	—	—	—	—	115	40
	200-60	187	220	12	—	—	—	—	—	—	—	—	—	—	115	40
	460-60	414	506	12	—	—	—	—	—	—	—	—	—	—	115	40
	575-60	518	633	12	—	—	—	—	—	—	—	—	—	—	115	40
	380-60	342	418	12	—	—	—	—	—	—	—	—	—	—	115	40
200, 202	230-60	207	253	12	—	—	—	—	—	—	—	—	—	—	115	40
	200-60	187	220	12	—	—	—	—	—	—	—	—	—	—	115	40
	460-60	414	506	12	—	—	—	—	—	—	—	—	—	—	115	40
	575-60	518	633	12	—	—	—	—	—	—	—	—	—	—	115	40
	380-60	342	418	12	—	—	—	—	—	—	—	—	—	—	115	40
220	230-60	207	253	13	—	—	—	—	—	—	—	—	—	—	115	40
	200-60	187	220	13	—	—	—	—	—	—	—	—	—	—	115	40
	460-60	414	506	13	—	—	—	—	—	—	—	—	—	—	115	40
	575-60	518	633	13	—	—	—	—	—	—	—	—	—	—	115	40
	380-60	342	418	13	—	—	—	—	—	—	—	—	—	—	115	40
240	230-60	207	253	13	—	—	—	—	—	—	—	—	—	—	115	40
	200-60	187	220	13	—	—	—	—	—	—	—	—	—	—	115	40
	460-60	414	506	13	—	—	—	—	—	—	—	—	—	—	115	40
	575-60	518	633	13	—	—	—	—	—	—	—	—	—	—	115	40
	380-60	342	418	13	—	—	—	—	—	—	—	—	—	—	115	40
260	460-60	414	506	15	—	—	—	—	—	—	—	—	—	—	115	40
	575-60	518	633	15	—	—	—	—	—	—	—	—	—	—	115	40
	380-60	342	418	15	—	—	—	—	—	—	—	—	—	—	115	40
280	460-60	414	506	16	—	—	—	—	—	—	—	—	—	—	115	40
	575-60	518	633	16	—	—	—	—	—	—	—	—	—	—	115	40
	380-60	342	418	16	—	—	—	—	—	—	—	—	—	—	115	40
300	460-60	414	506	16	—	—	—	—	—	—	—	—	—	—	115	40
	575-60	518	633	16	—	—	—	—	—	—	—	—	—	—	115	40
	380-60	342	418	16	—	—	—	—	—	—	—	—	—	—	115	40
325	460-60	414	506	18	—	—	—	—	—	—	—	—	—	—	115	40
	575-60	518	633	18	—	—	—	—	—	—	—	—	—	—	115	40
	380-60	342	418	18	—	—	—	—	—	—	—	—	—	—	115	40
350	460-60	414	506	18	—	—	—	—	—	—	—	—	—	—	115	40
	575-60	518	633	18	—	—	—	—	—	—	—	—	—	—	115	40
	380-60	342	418	18	—	—	—	—	—	—	—	—	—	—	115	40
400	460-60	414	506	20	—	—	—	—	—	—	—	—	—	—	115	50
	575-60	518	633	20	—	—	—	—	—	—	—	—	—	—	115	50
	380-60	342	418	20	—	—	—	—	—	—	—	—	—	—	115	50
450	460-60	414	506	22	—	—	—	—	—	—	—	—	—	—	115	50
	575-60	518	633	22	—	—	—	—	—	—	—	—	—	—	115	50
	380-60	342	418	22	—	—	—	—	—	—	—	—	—	—	115	50
500	460-60	414	506	22	—	—	—	—	—	—	—	—	—	—	115	50
	575-60	518	633	22	—	—	—	—	—	—	—	—	—	—	115	50
	380-60	342	418	22	—	—	—	—	—	—	—	—	—	—	115	50

LEGEND

ICF — Instantaneous Current Flow
MCA — Minimum Circuit Amps
MOCP — Maximum Overcurrent Protection
WD — Wye-Delta
XL — Across-the-Line

NOTES:

1. Units are suitable for use on electrical systems where voltage supplied to the unit terminals is not below or above the listed minimum and maximum limits. Maximum allowable phase imbalance is: voltage, 2%; amps 10%.
2. Cooler heater is wired into the control circuit so it is always operable as long as the control power supply disconnect is on, even if any safety device is open.
3. For MCA that is less than or equal to 380 amps, 3 conductors are required.
   For MCA between 381-760 amps, 6 conductors are required.
   For MCA between 761-1140 amps, 9 conductors are required.
   For MCA between 1141-1520 amps, 12 conductors are required.
   Calculation of conductors required is based on 75 C copper wire.
4. Wiring for main field supply must be rated 75 C minimum. Use copper for all units.
   a. Incoming wire size range for the terminal block is no. 4 AWG (American Wire Gage) to 500 kcmil.
   b. Incoming wire size range of non-fused disconnect with MCA up to 599.9 amps is 3/0 to 500 kcmil.
   c. Incoming wire size range of non-fused disconnect with MCA from 600 to 799.9 amps is 1/0 to 500 kcmil.
   d. Incoming wire size range of non-fused disconnect with MCA from 800 to 1199.9 amps is 250 kcmil to 500 kcmil.
5. Data provided circuit 1/circuit 2 where there are two circuits.

DUAL POINT (HIGH AMBIENT OPTION)

UNIT 30XA	UNIT VOLTAGE			NUMBER OF COND FANS	NO HYDRONIC PACKAGE					5 HP PUMP, 3450 RPM					CONTROL CIRCUIT	
	V-Hz (3 Ph)	Supplied			MCA	MOCP	ICF		Rec Fuse Size	MCA	MOCP	ICF		Rec Fuse Size	Voltage 1 PH, 60 Hz	MCA and MOCP
		Min	Max				WD	XL				WD	XL			
140, 142	230-60	207	253	6/4	383.8/211.9	600/ 300	660.8/391.2	—	450/250	383.8/227.9	600/350	660.8/407.2	—	450/300	115	40
	200-60	187	220	6/4	422.6/233.3	700/ 350	756.7/447.8	—	500/300	422.6/251.0	700/350	756.7/465.5	—	500/300	115	40
	460-60	414	506	6/4	191.9/105.9	300/ 150	330.4/195.6	962.4/ 566.6	225/125	191.9/113.9	300/175	330.4/203.6	962.4/574.6	225/150	115	40
	575-60	518	633	6/4	147.7/ 81.4	225/ 125	263.9/156.3	769.9/ 453.3	175/100	147.7/ 87.8	225/125	263.9/162.7	769.9/459.7	175/110	115	40
	380-60	342	418	6/4	223.9/124.0	350/ 200	400.2/237.1	1165.2/ 686.1	300/150	223.9/133.7	350/200	400.2/246.8	1165.2/695.8	300/175	115	40
160, 162	230-60	207	253	6/4	434.8/249.1	700/ 400	828.8/391.2	—	600/300	434.8/265.1	700/400	828.8/407.2	—	600/350	115	40
	200-60	187	220	6/4	478.1/273.9	800/ 450	950.7/447.8	—	600/350	478.1/291.6	800/450	950.7/465.5	—	600/350	115	40
	460-60	414	506	6/4	216.9/124.1	350/ 200	414.4/195.6	1222.4/ 566.6	300/150	216.9/132.1	350/200	414.4/203.6	1222.4/574.6	300/175	115	40
	575-60	518	633	6/4	167.0/ 95.9	250/ 150	331.9/156.3	977.9/ 453.3	200/125	167.0/102.3	250/150	331.9/162.7	977.9/459.7	200/125	115	40
	380-60	342	418	6/4	253.3/145.4	400/ 225	501.2/237.1	1480.2/ 686.1	300/175	253.3/155.1	400/250	501.2/246.8	1480.2/695.8	300/200	115	40
180, 182	230-60	207	253	6/6	383.8/383.8	600/ 600	660.8/660.8	—	450/450	—	—	—	—	—	115	40
	200-60	187	220	6/6	422.6/422.6	700/ 700	756.7/756.7	—	500/500	—	—	—	—	—	115	40
	460-60	414	506	6/6	191.9/191.9	300/ 300	330.4/330.4	962.4/ 962.4	225/225	—	—	—	—	—	115	40
	575-60	518	633	6/6	147.7/147.7	225/ 225	263.9/263.9	769.9/ 769.9	175/175	—	—	—	—	—	115	40
	380-60	342	418	6/6	223.9/223.9	350/ 350	400.2/400.2	1165.2/1165.2	300/300	—	—	—	—	—	115	40
200, 202	230-60	207	253	6/6	434.8/434.8	700/ 700	828.8/828.8	—	600/600	—	—	—	—	—	115	40
	200-60	187	220	6/6	478.1/478.1	800/ 800	950.7/950.7	—	600/600	—	—	—	—	—	115	40
	460-60	414	506	6/6	216.9/216.9	350/ 350	414.4/414.4	1222.4/1222.4	300/300	—	—	—	—	—	115	40
	575-60	518	633	6/6	167.0/167.0	250/ 250	331.9/331.9	977.9/ 977.9	200/200	—	—	—	—	—	115	40
	380-60	342	418	6/6	253.3/253.3	400/ 400	501.2/501.2	1480.2/1480.2	300/300	—	—	—	—	—	115	40
220	230-60	207	253	7/6	515.9/434.8	800/ 700	839.6/828.8	—	700/600	—	—	—	—	—	115	40
	200-60	187	220	7/6	567.8/478.1	800/ 800	962.6/950.7	—	700/600	—	—	—	—	—	115	40
	460-60	414	506	7/6	258.0/216.9	400/ 350	419.8/414.4	1227.8/1222.4	350/300	—	—	—	—	—	115	40
	575-60	518	633	7/6	198.8/167.0	300/ 250	336.2/331.9	982.2/ 977.9	250/200	—	—	—	—	—	115	40
	380-60	342	418	7/6	301.0/253.3	500/ 400	507.8/501.2	1486.8/1480.2	400/300	—	—	—	—	—	115	40
240	230-60	207	253	7/6	515.9/505.1	800/ 800	839.6/828.8	—	700/600	—	—	—	—	—	115	40
	200-60	187	220	7/6	567.8/555.8	800/ 800	962.6/950.7	—	700/700	—	—	—	—	—	115	40
	460-60	414	506	7/6	258.0/252.6	400/ 400	419.8/414.4	1227.8/1222.4	350/300	—	—	—	—	—	115	40
	575-60	518	633	7/6	198.8/194.5	300/ 300	336.2/331.9	982.2/ 977.9	250/250	—	—	—	—	—	115	40
	380-60	342	418	7/6	301.0/294.5	500/ 450	507.8/501.2	1486.8/1480.2	400/350	—	—	—	—	—	115	40
260	460-60	414	506	9/6	349.1/216.9	500/ 350	626.6/414.4	1848.6/1222.4	450/300	—	—	—	—	—	115	40
	575-60	518	633	9/6	268.6/167.0	450/ 250	500.9/331.9	1478.9/ 977.9	350/200	—	—	—	—	—	115	40
	380-60	342	418	9/6	406.2/253.3	600/ 400	758.8/501.2	2237.8/1480.2	500/300	—	—	—	—	—	115	40
280	460-60	414	506	9/7	349.1/258.0	500/ 400	626.6/419.8	1848.6/1227.8	450/350	—	—	—	—	—	115	40
	575-60	518	633	9/7	268.6/198.8	450/ 300	500.9/336.2	1478.9/ 982.2	350/250	—	—	—	—	—	115	40
	380-60	342	418	9/7	406.2/301.0	600/ 500	758.8/507.8	2237.8/1486.8	500/400	—	—	—	—	—	115	40
300	460-60	414	506	10/6	411.0/252.6	600/ 400	632.0/414.4	1854.0/1222.4	500/300	—	—	—	—	—	115	40
	575-60	518	633	10/6	315.9/194.5	500/ 300	505.2/331.9	1483.2/ 977.9	400/250	—	—	—	—	—	115	40
	380-60	342	418	10/6	478.9/294.5	800/ 450	765.4/501.2	2244.4/1480.2	600/350	—	—	—	—	—	115	40
325	460-60	414	506	9/9	349.1/349.1	500/ 500	626.6/626.6	1848.6/1848.6	450/450	—	—	—	—	—	115	40
	575-60	518	633	9/9	268.6/268.6	450/ 450	500.9/500.9	1478.9/1478.9	350/350	—	—	—	—	—	115	40
	380-60	342	418	9/9	406.2/406.2	600/ 600	758.8/758.8	2237.8/2237.8	500/500	—	—	—	—	—	115	40
350	460-60	414	506	9/9	405.6/349.1	600/ 500	626.6/626.6	1848.6/1848.6	500/450	—	—	—	—	—	115	40
	575-60	518	633	9/9	311.6/268.6	500/ 450	500.9/500.9	1478.9/1478.9	400/350	—	—	—	—	—	115	40
	380-60	342	418	9/9	472.4/406.2	800/ 600	758.8/758.8	2237.8/2237.8	600/500	—	—	—	—	—	115	40
400	460-60	414	506	8/12	343.7/461.1	500/ 600	621.2/622.9	1843.2/1430.9	450/600	—	—	—	—	—	115	50
	575-60	518	633	8/12	264.2/355.2	400/ 450	496.6/492.7	1474.6/1138.7	350/400	—	—	—	—	—	115	50
	380-60	342	418	8/12	399.7/537.9	600/ 700	752.3/744.6	2231.3/1723.6	500/600	—	—	—	—	—	115	50
450	460-60	414	506	8/14	400.2/560.2	600/ 800	621.2/781.2	1843.2/2003.2	500/700	—	—	—	—	—	115	50
	575-60	518	633	8/14	307.3/430.7	500/ 600	496.6/619.9	1474.6/1597.9	400/500	—	—	—	—	—	115	50
	380-60	342	418	8/14	465.8/652.8	700/ 800	752.3/939.2	2231.3/2418.2	600/800	—	—	—	—	—	115	50
500	460-60	414	506	8/14	400.2/608.8	600/ 800	621.2/829.7	1843.2/2051.7	500/700	—	—	—	—	—	115	50
	575-60	518	633	8/14	307.3/468.0	500/ 600	496.6/657.3	1474.6/1635.3	400/600	—	—	—	—	—	115	50
	380-60	342	418	8/14	465.8/709.3	700/1000	752.3/995.7	2231.3/2474.7	600/800	—	—	—	—	—	115	50

LEGEND

ICF — Instantaneous Current Flow
MCA — Minimum Circuit Amps
MOCP — Maximum Overcurrent Protection
WD — Wye-Delta
XL — Across-the-Line

NOTES:

1. Units are suitable for use on electrical systems where voltage supplied to the unit terminals is not below or above the listed minimum and maximum limits. Maximum allowable phase imbalance is: voltage, 2%; amps 10%.
2. Cooler heater is wired into the control circuit so it is always operable as long as the control power supply disconnect is on, even if any safety device is open.
3. For MCA that is less than or equal to 380 amps, 3 conductors are required.
   For MCA between 381-760 amps, 6 conductors are required.
   For MCA between 761-1140 amps, 9 conductors are required.
   For MCA between 1141-1520 amps, 12 conductors are required.
   Calculation of conductors required is based on 75 C copper wire.
4. Wiring for main field supply must be rated 75 C minimum. Use copper for all units.
   a. Incoming wire size range for the terminal block is no. 4 AWG (American Wire Gage) to 500 kcmil.
   b. Incoming wire size range of non-fused disconnect with MCA up to 599.9 amps is 3/0 to 500 kcmil.
   c. Incoming wire size range of non-fused disconnect with MCA from 600 to 799.9 amps is 1/0 to 500 kcmil.
   d. Incoming wire size range of non-fused disconnect with MCA from 800 to 1199.9 amps is 250 kcmil to 500 kcmil.
5. Data provided circuit 1/circuit 2 where there are two circuits.

Electrical data (cont)

DUAL POINT (HIGH AMBIENT OPTION) (cont)

UNIT 30XA	UNIT VOLTAGE			NUMBER OF COND FANS	7.5 HP PUMP, 3450 RPM					10 HP PUMP, 3450 RPM					CONTROL CIRCUIT	
	V-Hz (3 Ph)	Supplied			MCA	MOCP	ICF		Rec Fuse Size	MCA	MOCP	ICF		Rec Fuse Size	Voltage 1 PH, 60 Hz	MCA and MOCP
		Min	Max				WD	XL				WD	XL			
140, 142	230-60	207	253	6/4	383.8/235.1	600/350	660.8/414.4	—	450/300	383.8/242.3	600/350	660.8/421.6	—	450/300	115	40
	200-60	187	220	6/4	422.6/259.0	700/400	756.7/473.4	—	500/300	422.6/266.9	700/400	756.7/481.4	—	500/350	115	40
	460-60	414	506	6/4	191.9/117.5	300/175	330.4/207.2	962.4/578.2	225/150	191.9/121.1	300/175	330.4/210.8	962.4/581.8	225/150	115	40
	575-60	518	633	6/4	147.7/ 90.7	225/125	263.9/165.6	769.9 /462.6	175/110	147.7/ 93.5	225/125	263.9/168.4	769.9/465.4	175/110	115	40
	380-60	342	418	6/4	223.9/138.0	350/200	400.2/251.2	1165.2/700.2	300/175	223.9/142.4	350/200	400.2/255.5	1165.2/704.5	300/175	115	40
160, 162	230-60	207	253	6/4	434.8/272.3	700/400	828.8/414.4	—	600/350	434.8/279.5	700/400	828.8/421.6	—	600/350	115	40
	200-60	187	220	6/4	478.1/299.6	800/450	950.7/473.4	—	600/350	478.1/307.6	800/450	950.7/481.4	—	600/400	115	40
	460-60	414	506	6/4	216.9/135.7	350/200	414.4/207.2	1222.4/578.2	300/175	216.9/139.3	350/200	414.4/210.8	1222.4/581.8	300/175	115	40
	575-60	518	633	6/4	167.0/105.2	250/150	331.9/165.6	977.9/462.6	200/125	167.0/108.1	250/150	331.9/168.4	977.9/465.4	200/125	115	40
	380-60	342	418	6/4	253.3/159.5	400/250	501.2/251.2	1480.2/700.2	300/200	253.3/163.8	400/250	501.2/255.5	1480.2/704.5	300/200	115	40
180, 182	230-60	207	253	6/6	—	—	—	—	—	—	—	—	—	—	115	40
	200-60	187	220	6/6	—	—	—	—	—	—	—	—	—	—	115	40
	460-60	414	506	6/6	—	—	—	—	—	—	—	—	—	—	115	40
	575-60	518	633	6/6	—	—	—	—	—	—	—	—	—	—	115	40
	380-60	342	418	6/6	—	—	—	—	—	—	—	—	—	—	115	40
200, 202	230-60	207	253	6/6	—	—	—	—	—	—	—	—	—	—	115	40
	200-60	187	220	6/6	—	—	—	—	—	—	—	—	—	—	115	40
	460-60	414	506	6/6	—	—	—	—	—	—	—	—	—	—	115	40
	575-60	518	633	6/6	—	—	—	—	—	—	—	—	—	—	115	40
	380-60	342	418	6/6	—	—	—	—	—	—	—	—	—	—	115	40
220	230-60	207	253	7/6	—	—	—	—	—	—	—	—	—	—	115	40
	200-60	187	220	7/6	—	—	—	—	—	—	—	—	—	—	115	40
	460-60	414	506	7/6	—	—	—	—	—	—	—	—	—	—	115	40
	575-60	518	633	7/6	—	—	—	—	—	—	—	—	—	—	115	40
	380-60	342	418	7/6	—	—	—	—	—	—	—	—	—	—	115	40
240	230-60	207	253	7/6	—	—	—	—	—	—	—	—	—	—	115	40
	200-60	187	220	7/6	—	—	—	—	—	—	—	—	—	—	115	40
	460-60	414	506	7/6	—	—	—	—	—	—	—	—	—	—	115	40
	575-60	518	633	7/6	—	—	—	—	—	—	—	—	—	—	115	40
	380-60	342	418	7/6	—	—	—	—	—	—	—	—	—	—	115	40
260	460-60	414	506	9/6	—	—	—	—	—	—	—	—	—	—	115	40
	575-60	518	633	9/6	—	—	—	—	—	—	—	—	—	—	115	40
	380-60	342	418	9/6	—	—	—	—	—	—	—	—	—	—	115	40
280	460-60	414	506	9/7	—	—	—	—	—	—	—	—	—	—	115	40
	575-60	518	633	9/7	—	—	—	—	—	—	—	—	—	—	115	40
	380-60	342	418	9/7	—	—	—	—	—	—	—	—	—	—	115	40
300	460-60	414	506	10/6	—	—	—	—	—	—	—	—	—	—	115	40
	575-60	518	633	10/6	—	—	—	—	—	—	—	—	—	—	115	40
	380-60	342	418	10/6	—	—	—	—	—	—	—	—	—	—	115	40
325	460-60	414	506	9/9	—	—	—	—	—	—	—	—	—	—	115	40
	575-60	518	633	9/9	—	—	—	—	—	—	—	—	—	—	115	40
	380-60	342	418	9/9	—	—	—	—	—	—	—	—	—	—	115	40
350	460-60	414	506	9/9	—	—	—	—	—	—	—	—	—	—	115	40
	575-60	518	633	9/9	—	—	—	—	—	—	—	—	—	—	115	40
	380-60	342	418	9/9	—	—	—	—	—	—	—	—	—	—	115	40
400	460-60	414	506	8/12	—	—	—	—	—	—	—	—	—	—	115	50
	575-60	518	633	8/12	—	—	—	—	—	—	—	—	—	—	115	50
	380-60	342	418	8/12	—	—	—	—	—	—	—	—	—	—	115	50
450	460-60	414	506	8/14	—	—	—	—	—	—	—	—	—	—	115	50
	575-60	518	633	8/14	—	—	—	—	—	—	—	—	—	—	115	50
	380-60	342	418	8/14	—	—	—	—	—	—	—	—	—	—	115	50
500	460-60	414	506	8/14	—	—	—	—	—	—	—	—	—	—	115	50
	575-60	518	633	8/14	—	—	—	—	—	—	—	—	—	—	115	50
	380-60	342	418	8/14	—	—	—	—	—	—	—	—	—	—	115	50

LEGEND

ICF — Instantaneous Current Flow
MCA — Minimum Circuit Amps
MOCP — Maximum Overcurrent Protection
WD — Wye-Delta
XL — Across-the-Line

NOTES:

1. Units are suitable for use on electrical systems where voltage supplied to the unit terminals is not below or above the listed minimum and maximum limits. Maximum allowable phase imbalance is: voltage, 2%; amps 10%.
2. Cooler heater is wired into the control circuit so it is always operable as long as the control power supply disconnect is on, even if any safety device is open.
3. For MCA that is less than or equal to 380 amps, 3 conductors are required.
   For MCA between 381-760 amps, 6 conductors are required.
   For MCA between 761-1140 amps, 9 conductors are required.
   For MCA between 1141-1520 amps, 12 conductors are required.
   Calculation of conductors required is based on 75 C copper wire.
4. Wiring for main field supply must be rated 75 C minimum. Use copper for all units.
   a. Incoming wire size range for the terminal block is no. 4 AWG (American Wire Gage) to 500 kcmil.
   b. Incoming wire size range of non-fused disconnect with MCA up to 599.9 amps is 3/0 to 500 kcmil.
   c. Incoming wire size range of non-fused disconnect with MCA from 600 to 799.9 amps is 1/0 to 500 kcmil.
   d. Incoming wire size range of non-fused disconnect with MCA from 800 to 1199.9 amps is 250 kcmil to 500 kcmil.
5. Data provided circuit 1/circuit 2 where there are two circuits.

DUAL POINT (HIGH AMBIENT OPTION) (cont)

UNIT 30XA	UNIT VOLTAGE			NUMBER OF COND FANS	15 HP PUMP, 3450 RPM					CONTROL CIRCUIT	
	V-Hz (3 Ph)	Supplied			MCA	MOCP	ICF		Rec Fuse Size	Voltage 1 PH, 60 Hz	MCA and MOCP
		Min	Max				WD	XL			
140,142	230-60	207	253	6/4	383.8/256.9	600/350	660.8/436.2	—	450/300	115	40
	200-60	187	220	6/4	422.6/283.1	700/400	756.7/497.5	—	500/350	115	40
	460-60	414	506	6/4	191.9/128.4	300/175	330.4/218.1	962.4/589.1	225/150	115	40
	575-60	518	633	6/4	147.7/ 99.4	225/150	263.9/174.3	769.9/471.3	175/125	115	40
	380-60	342	418	6/4	223.9/151.2	350/225	400.2/264.4	1165.2/713.4	300/175	115	40
160,162	230-60	207	253	6/4	434.8/294.1	700/450	828.8/436.2	—	600/350	115	40
	200-60	187	220	6/4	478.1/323.7	800/500	950.7/497.5	—	600/400	115	40
	460-60	414	506	6/4	216.9/146.6	350/225	414.4/218.1	1222.4/589.1	300/175	115	40
	575-60	518	633	6/4	167.0/113.9	250/175	331.9/174.3	977.9/471.3	200/150	115	40
	380-60	342	418	6/4	253.3/172.7	400/250	501.2/264.4	1480.2/713.4	300/200	115	40
180,182	230-60	207	253	6/6	—	—	—	—	—	115	40
	200-60	187	220	6/6	—	—	—	—	—	115	40
	460-60	414	506	6/6	—	—	—	—	—	115	40
	575-60	518	633	6/6	—	—	—	—	—	115	40
	380-60	342	418	6/6	—	—	—	—	—	115	40
200,202	230-60	207	253	6/6	—	—	—	—	—	115	40
	200-60	187	220	6/6	—	—	—	—	—	115	40
	460-60	414	506	6/6	—	—	—	—	—	115	40
	575-60	518	633	6/6	—	—	—	—	—	115	40
	380-60	342	418	6/6	—	—	—	—	—	115	40
220	230-60	207	253	7/6	—	—	—	—	—	115	40
	200-60	187	220	7/6	—	—	—	—	—	115	40
	460-60	414	506	7/6	—	—	—	—	—	115	40
	575-60	518	633	7/6	—	—	—	—	—	115	40
	380-60	342	418	7/6	—	—	—	—	—	115	40
240	230-60	207	253	7/6	—	—	—	—	—	115	40
	200-60	187	220	7/6	—	—	—	—	—	115	40
	460-60	414	506	7/6	—	—	—	—	—	115	40
	575-60	518	633	7/6	—	—	—	—	—	115	40
	380-60	342	418	7/6	—	—	—	—	—	115	40
260	460-60	414	506	9/6	—	—	—	—	—	115	40
	575-60	518	633	9/6	—	—	—	—	—	115	40
	380-60	342	418	9/6	—	—	—	—	—	115	40
280	460-60	414	506	9/7	—	—	—	—	—	115	40
	575-60	518	633	9/7	—	—	—	—	—	115	40
	380-60	342	418	9/7	—	—	—	—	—	115	40
300	460-60	414	506	10/6	—	—	—	—	—	115	40
	575-60	518	633	10/6	—	—	—	—	—	115	40
	380-60	342	418	10/6	—	—	—	—	—	115	40
325	460-60	414	506	9/9	—	—	—	—	—	115	40
	575-60	518	633	9/9	—	—	—	—	—	115	40
	380-60	342	418	9/9	—	—	—	—	—	115	40
350	460-60	414	506	9/9	—	—	—	—	—	115	40
	575-60	518	633	9/9	—	—	—	—	—	115	40
	380-60	342	418	9/9	—	—	—	—	—	115	40
400	460-60	414	506	8/12	—	—	—	—	—	115	50
	575-60	518	633	8/12	—	—	—	—	—	115	50
	380-60	342	418	8/12	—	—	—	—	—	115	50
450	460-60	414	506	8/14	—	—	—	—	—	115	50
	575-60	518	633	8/14	—	—	—	—	—	115	50
	380-60	342	418	8/14	—	—	—	—	—	115	50
500	460-60	414	506	8/14	—	—	—	—	—	115	50
	575-60	518	633	8/14	—	—	—	—	—	115	50
	380-60	342	418	8/14	—	—	—	—	—	115	50

LEGEND

ICF — Instantaneous Current Flow
MCA — Minimum Circuit Amps
MOCP — Maximum Overcurrent Protection
WD — Wye-Delta
XL — Across-the-Line

NOTES:

1. Units are suitable for use on electrical systems where voltage supplied to the unit terminals is not below or above the listed minimum and maximum limits. Maximum allowable phase imbalance is: voltage, 2%; amps 10%.
2. Cooler heater is wired into the control circuit so it is always operable as long as the control power supply disconnect is on, even if any safety device is open.
3. For MCA that is less than or equal to 380 amps, 3 conductors are required.
   For MCA between 381-760 amps, 6 conductors are required.
   For MCA between 761-1140 amps, 9 conductors are required.
   For MCA between 1141-1520 amps, 12 conductors are required.
   Calculation of conductors required is based on 75 C copper wire.
4. Wiring for main field supply must be rated 75 C minimum. Use copper for all units.
   a. Incoming wire size range for the terminal block is no. 4 AWG (American Wire Gage) to 500 kcmil.
   b. Incoming wire size range of non-fused disconnect with MCA up to 599.9 amps is 3/0 to 500 kcmil.
   c. Incoming wire size range of non-fused disconnect with MCA from 600 to 799.9 amps is 1/0 to 500 kcmil.
   d. Incoming wire size range of non-fused disconnect with MCA from 800 to 1199.9 amps is 250 kcmil to 500 kcmil.
5. Data provided circuit 1/circuit 2 where there are two circuits.

Electrical data (cont)

POWER AND CONTROL CONNECTIONS

30XA	TYPE	VOLTAGE 3 PH 60 Hz	POWER AND CONTROL CONNECTIONS					
			COMBI*		PEB1†		PEB2†	
			Power	Control	Power	Control	Power	Control
080,082 090,092 100,102 110,112 120,122	SINGLE POINT	200	Circuit 1	Yes				
		230	Circuit 1	Yes				
		380	Circuit 1	Yes				
		460	Circuit 1	Yes				
		575	Circuit 1	Yes				
	DUAL POINT	200	Circuit 1 and 2	Yes				
		230	Circuit 1 and 2	Yes				
		380	Circuit 1 and 2	Yes				
		460	Circuit 1 and 2	Yes				
		575	Circuit 1 and 2	Yes				
140,142 160,162 180,182 200,202	SINGLE POINT	200	Circuit 1			Yes		
		230	Circuit 1			Yes		
		380			Circuit 1	Yes		
		460			Circuit 1	Yes		
		575			Circuit 1	Yes		
	DUAL POINT	200	Circuit 1 and 2			Yes		
		230	Circuit 1 and 2			Yes		
		380			Circuit 1 and 2	Yes		
		460			Circuit 1 and 2	Yes		
		575			Circuit 1 and 2	Yes		
220 240	SINGLE POINT	200				Yes	Circuit 1	
		230				Yes	Circuit 1	
		380			Circuit 1	Yes		
		460			Circuit 1	Yes		
		575			Circuit 1	Yes		
	DUAL POINT	200				Yes	Circuit 1 and 2	
		230				Yes	Circuit 1 and 2	
		380			Circuit 1 and 2	Yes		
		460			Circuit 1 and 2	Yes		
		575			Circuit 1 and 2	Yes		
260 280 300 325 350	SINGLE POINT	200						
		230						
		380			Circuit 1	Yes		
		460			Circuit 1	Yes		
		575			Circuit 1	Yes		
	DUAL POINT	200						
		230						
		380			Circuit 1 and 2	Yes		
		460			Circuit 1 and 2	Yes		
		575			Circuit 1 and 2	Yes		
400 450 500	SINGLE POINT	200						
		230						
		380					Circuit 1	Yes
		460					Circuit 1	Yes
		575					Circuit 1	Yes
	DUAL POINT	200						
		230						
		380			Circuit 1		Circuit 2	Yes
		460			Circuit 1		Circuit 2	Yes
		575			Circuit 1		Circuit 2	Yes

*COMBI box is located at the end of the unit.
†PEB1 and PEB2 boxes are located on the side of the unit. If both boxes are used, the one on the left (viewing from the front of the boxes) is PEB1.

Shaded area means that box is not used on this model.

COMPRESSOR AND FAN ELECTRICAL DATA

30XA UNIT SIZE	UNIT VOLTAGE V-Hz (3 Ph, 60 Hz)	NUMBER OF COND FANS*	CONDENSER FANS FLA		COMPRESSOR											
					A				B				C			
					LRA (All Units)		RLA		LRA (All Units)		RLA		LRA (All Units)		RLA	
			High Ambient Temp Cond. Fans (1140 rpm)	Standard Cond. Fans (850 rpm)	XL	WD	High Ambient Temp Cond. Fans (1140 rpm)	Standard Cond. Fans (850 rpm)	XL	WD	High Ambient Temp Cond. Fans (1140 rpm)	Standard Cond. Fans (850 rpm)	XL	WD	High Ambient Temp Cond. Fans (1140 rpm)	Standard Cond. Fans (850 rpm)
080, 082	200	3/3	11.9	6.6	1081.0	345.0	130.9	136.8	1081.0	345.0	130.9	136.8	—	—	—	—
	230	3/3	10.8	6.0	940.0	300.0	118.9	124.2	940.0	300.0	118.9	124.2	—	—	—	—
	380	3/3	6.5	3.6	569.0	182.0	68.8	71.9	569.0	182.0	68.8	71.9	—	—	—	—
	460	3/3	5.4	3.0	470.0	150.0	59.4	62.1	470.0	150.0	59.4	62.1	—	—	—	—
	575	3/3	4.3	2.4	376.0	120.0	45.4	47.5	376.0	120.0	45.4	47.5	—	—	—	—
090, 092	200	4/4	11.9	6.6	1081.0	345.0	134.3	140.0	1081.0	345.0	134.3	140.0	—	—	—	—
	230	4/4	10.8	6.0	940.0	300.0	122.0	127.1	940.0	300.0	122.0	127.1	—	—	—	—
	380	4/4	6.5	3.6	569.0	182.0	70.6	73.5	569.0	182.0	70.6	73.5	—	—	—	—
	460	4/4	5.4	3.0	470.0	150.0	61.0	63.6	470.0	150.0	61.0	63.6	—	—	—	—
	575	4/4	4.3	2.4	376.0	120.0	46.6	48.6	376.0	120.0	46.6	48.6	—	—	—	—
100, 102	200	4/4	11.9	6.6	1357.0	437.0	148.4	154.8	1357.0	437.0	148.4	154.8	—	—	—	—
	230	4/4	10.8	6.0	1180.0	380.0	134.9	140.7	1180.0	380.0	134.9	140.7	—	—	—	—
	380	4/4	6.5	3.6	714.0	230.0	78.3	81.6	714.0	230.0	78.3	81.6	—	—	—	—
	460	4/4	5.4	3.0	590.0	190.0	67.5	70.4	590.0	190.0	67.5	70.4	—	—	—	—
	575	4/4	4.3	2.4	472.0	152.0	51.3	53.5	472.0	152.0	51.3	53.5	—	—	—	—
110, 112	200	4/4	11.9	6.6	1357.0	437.0	180.9	190.7	1357.0	437.0	148.4	154.8	—	—	—	—
	230	4/4	10.8	6.0	1180.0	380.0	164.7	173.6	1180.0	380.0	134.9	140.7	—	—	—	—
	380	4/4	6.5	3.6	714.0	230.0	95.4	100.6	714.0	230.0	78.3	81.6	—	—	—	—
	460	4/4	5.4	3.0	590.0	190.0	82.0	86.4	590.0	190.0	67.5	70.4	—	—	—	—
	575	4/4	4.3	2.4	472.0	152.0	62.9	66.3	472.0	152.0	51.3	53.5	—	—	—	—
120, 122	200	4/4	11.9	6.6	1357.0	437.0	180.9	190.7	1357.0	437.0	180.9	190.7	—	—	—	—
	230	4/4	10.8	6.0	1180.0	380.0	164.7	173.6	1180.0	380.0	164.7	173.6	—	—	—	—
	380	4/4	6.5	3.6	714.0	230.0	95.4	100.6	714.0	230.0	95.4	100.6	—	—	—	—
	460	4/4	5.4	3.0	590.0	190.0	82.0	86.4	590.0	190.0	82.0	86.4	—	—	—	—
	575	4/4	4.3	2.4	472.0	152.0	62.9	66.3	472.0	152.0	62.9	66.3	—	—	—	—
140, 142	200	6/4	11.9	6.6	2162.0	690.0	280.8	293.9	1357.0	437.0	148.4	154.8	—	—	—	—
	230	6/4	10.8	6.0	1880.0	600.0	255.2	267.2	1180.0	380.0	134.9	140.7	—	—	—	—
	380	6/4	6.5	3.6	1138.0	363.0	147.7	154.6	714.0	230.0	78.3	81.6	—	—	—	—
	460	6/4	5.4	3.0	940.0	300.0	127.6	133.6	590.0	190.0	67.5	70.4	—	—	—	—
	575	6/4	4.3	2.4	752.0	240.0	97.5	102.0	472.0	152.0	51.3	53.5	—	—	—	—
160, 162	200	6/4	11.9	6.6	2714.0	863.0	325.2	340.6	1357.0	437.0	180.9	190.7	—	—	—	—
	230	6/4	10.8	6.0	2360.0	750.0	296.0	310.0	1180.0	380.0	164.7	173.6	—	—	—	—
	380	6/4	6.5	3.6	1428.0	454.0	171.3	179.4	714.0	230.0	95.4	100.6	—	—	—	—
	460	6/4	5.4	3.0	1180.0	375.0	147.6	154.6	590.0	190.0	82.0	86.4	—	—	—	—
	575	6/4	4.3	2.4	944.0	300.0	112.9	118.2	472.0	152.0	62.9	66.3	—	—	—	—
180, 182	200	6/6	11.9	6.6	2162.0	690.0	280.8	293.9	2162.0	690.0	280.8	293.9	—	—	—	—
	230	6/6	10.8	6.0	1880.0	600.0	255.2	267.2	1880.0	600.0	255.2	267.2	—	—	—	—
	380	6/6	6.5	3.6	1138.0	363.0	147.7	154.6	1138.0	363.0	147.7	154.6	—	—	—	—
	460	6/6	5.4	3.0	940.0	300.0	127.6	133.6	940.0	300.0	127.6	133.6	—	—	—	—
	575	6/6	4.3	2.4	752.0	240.0	97.5	102.0	752.0	240.0	97.5	102.0	—	—	—	—
200, 202	200	6/6	11.9	6.6	2714.0	863.0	325.2	340.6	2714.0	863.0	325.2	340.6	—	—	—	—
	230	6/6	10.8	6.0	2360.0	750.0	296.0	310.0	2360.0	750.0	296.0	310.0	—	—	—	—
	380	6/6	6.5	3.6	1428.0	454.0	171.3	179.4	1428.0	454.0	171.3	179.4	—	—	—	—
	460	6/6	5.4	3.0	1180.0	375.0	147.6	154.6	1180.0	375.0	147.6	154.6	—	—	—	—
	575	6/6	4.3	2.4	944.0	300.0	112.9	118.2	944.0	300.0	112.9	118.2	—	—	—	—
220	200	7/6	11.9	6.6	2714.0	863.0	387.3	406.6	2714.0	863.0	325.2	340.6	—	—	—	—
	230	7/6	10.8	6.0	2360.0	750.0	352.3	369.8	2360.0	750.0	296.0	310.0	—	—	—	—
	380	7/6	6.5	3.6	1428.0	454.0	204.2	214.3	1428.0	454.0	171.3	179.4	—	—	—	—
	460	7/6	5.4	3.0	1180.0	375.0	176.1	184.9	1180.0	375.0	147.6	154.6	—	—	—	—
	575	7/6	4.3	2.4	944.0	300.0	134.8	141.5	944.0	300.0	112.9	118.2	—	—	—	—
240	200	7/6	11.9	6.6	2714.0	863.0	387.3	406.6	2714.0	863.0	387.3	406.6	—	—	—	—
	230	7/6	10.8	6.0	2360.0	750.0	352.3	369.8	2360.0	750.0	352.3	369.8	—	—	—	—
	380	7/6	6.5	3.6	1428.0	454.0	204.2	214.3	1428.0	454.0	204.2	214.3	—	—	—	—
	460	7/6	5.4	3.0	1180.0	375.0	176.1	184.9	1180.0	375.0	176.1	184.9	—	—	—	—
	575	7/6	4.3	2.4	944.0	300.0	134.8	141.5	944.0	300.0	134.8	141.5	—	—	—	—
260	380	9/6	6.5	3.6	2143.0	684.0	277.9	293.0	1428.0	454.0	171.3	179.4	—	—	—	—
	460	9/6	5.4	3.0	1770.0	565.0	240.4	253.5	1180.0	375.0	147.6	154.6	—	—	—	—
	575	9/6	4.3	2.4	1416.0	452.0	183.7	193.7	944.0	300.0	112.9	118.2	—	—	—	—
280	380	9/7	6.5	3.6	2143.0	684.0	277.9	293.0	1428.0	454.0	204.2	214.3	—	—	—	—
	460	9/7	5.4	3.0	1770.0	565.0	240.4	253.5	1180.0	375.0	176.1	184.9	—	—	—	—
	575	9/7	4.3	2.4	1416.0	452.0	183.7	193.7	944.0	300.0	134.8	141.5	—	—	—	—
300	380	10/6	6.5	3.6	2143.0	684.0	330.8	350.3	1428.0	454.0	204.2	214.3	—	—	—	—
	460	10/6	5.4	3.0	1770.0	565.0	285.6	302.4	1180.0	375.0	176.1	184.9	—	—	—	—
	575	10/6	4.3	2.4	1416.0	452.0	218.2	231.0	944.0	300.0	134.8	141.5	—	—	—	—
325	380	9/9	6.5	3.6	2143.0	684.0	277.9	293.0	2143.0	684.0	277.9	293.0	—	—	—	—
	460	9/9	5.4	3.0	1770.0	565.0	240.4	253.5	1770.0	565.0	240.4	253.5	—	—	—	—
	575	9/9	4.3	2.4	1416.0	452.0	183.7	193.7	1416.0	452.0	183.7	193.7	—	—	—	—
350	380	9/9	6.5	3.6	2143.0	684.0	330.8	350.3	2143.0	684.0	277.9	293.0	—	—	—	—
	460	9/9	5.4	3.0	1770.0	565.0	285.6	302.4	1770.0	565.0	240.4	253.5	—	—	—	—
	575	9/9	4.3	2.4	1416.0	452.0	218.2	231.0	1416.0	452.0	183.7	193.7	—	—	—	—
400	380	8/12	6.5	3.6	1428.0	454.0	204.2	214.3	1428.0	454.0	204.2	214.3	2143.0	684.0	277.9	293.0
	460	8/12	5.4	3.0	1180.0	375.0	176.1	184.9	1180.0	375.0	176.1	184.9	1770.0	565.0	240.4	253.5
	575	8/12	4.3	2.4	944.0	300.0	134.8	141.5	944.0	300.0	134.8	141.5	1416.0	452.0	183.7	193.7
450	380	8/14	6.5	3.6	2143.0	684.0	330.8	350.3	1138.0	363.0	147.7	154.6	2143.0	684.0	330.8	350.3
	460	8/14	5.4	3.0	1770.0	565.0	285.6	302.4	940.0	300.0	127.6	133.6	1770.0	565.0	285.6	302.4
	575	8/14	4.3	2.4	1416.0	452.0	218.2	231.0	752.0	240.0	97.5	102.0	1416.0	452.0	218.2	231.0
500	380	8/14	6.5	3.6	2143.0	684.0	330.8	350.3	1428.0	454.0	204.2	214.3	2143.0	684.0	330.8	350.3
	460	8/14	5.4	3.0	1770.0	565.0	285.6	302.4	1180.0	375.0	176.1	184.9	1770.0	565.0	285.6	302.4
	575	8/14	4.3	2.4	1416.0	452.0	218.2	231.0	944.0	300.0	134.8	141.5	1416.0	452.0	218.2	231.0

LEGEND

LRA — Locked Rotor Amps
RLA — Rated Load Amps
WD — Wye Delta
XL — Across-the-Line

*Quantity of fan motors for incoming power supply Circuit 1/Circuit 2.

NOTES:
1. For 30XA080-350 units with dual power supply, main power supply 1 uses refrigerant circuit A components to calculate MCA and MOCP. Main power supply 2 uses refrigerant circuit B components to calculate MCA and MOCP.
2. 30XA400-500 units have dual power supply. Main power supply 1 uses refrigerant circuit C components to calculate MCA and MOCP. Main power supply 2 uses refrigerant circuit A and B components to calculate MCA and MOCP.

Electrical data (cont)

PUMP ELECTRICAL DATA

PUMP HP	UNIT VOLTAGE V-Hz (3 Ph)	HYDRONIC SYSTEM (SINGLE OR DUAL) FLA (Each)	30XA UNIT SIZE
5	230-60 200-60 460-60 575-60 380-60	11.6 12.6 5.8 4.6 7.0	090-162
7.5	230-60 200-60 460-60 575-60 380-60	17.4 18.5 8.7 7.0 10.4	090-162
10	230-60 200-60 460-60 575-60 380-60	23.0 25.0 11.5 9.2 14.0	090-162
15	230-60 200-60 460-60 575-60 380-60	34.0 36.7 17.0 14.0 21.0	090-162

FLA — Full Load Amps

Controls

Microprocessor

The *Comfort*Link™ microprocessor controls overall unit operation and controls a number of processes simultaneously. These processes include internal timers, reading inputs, analog to digital conversions, fan control, display control, diagnostic control, output relay control, demand limit, capacity control, head pressure control, and temperature reset. Some processes are updated almost continuously, others every 2 to 3 seconds, and some every 30 seconds. The microprocessor routine is started by switching the Emergency ON-OFF switch to ON position. Pump control of external, single pumps (where configured) will energize the cooler pump to the internal (or CCN) time schedule (or input occupied signal from external system). If chiller control of dual, external pumps is required, the external pump control accessory package (part number 00EFN900003200A) must be installed.

When the unit receives a call for cooling (based on a deviation from chilled water set point), the unit stages up in capacity to maintain the cooler fluid set point. The first compressor starts 1 to 3 minutes after the call for cooling. The *Comfort*Link microprocessor controls the capacity of the chiller by varying the number of compressors on and each loading capacity to satisfy actual dynamic load conditions. The control maintains leaving-fluid temperature set point shown on the Navigator™ device through intelligent positioning of the slide valve and compressor cycling. Accuracy depends on loop volume, loop flow rate, load, and outdoor-air temperature. No adjustment for cooling range or cooler flow rate is required, because the control automatically compensates for cooling range by measuring both return-fluid temperature and leaving-fluid temperature. This is referred to as leaving-fluid temperature control with return-fluid temperature compensation.

The basic logic for determining when to add or remove capacity is a time band integration of deviation from set point plus rate of change of leaving-fluid temperature. When leaving-fluid temperature is close to the set point and slowly moving closer, logic prevents additional capacity. If leaving-fluid temperature is less than 34 F (1.1 C) for water, or 6° F (3.3° C) below the brine freeze set point for brine units, the unit is shut off until the water temperature for brine reaches 34 F (1.1 C) or to 6° F (3.3° C) above the set point for brine to protect against freezing.

If pulldown control has been selected (adjustable setting), no additional capacity is added as long as the difference between leaving-fluid temperature and the set point is greater than 4° F (2.2° C) and rate of change in leaving-water temperature is greater than the adjustable setting. If it has been less than 90 seconds since the last capacity change, compressors will continue to run unless a safety device trips. This prevents rapid cycling and also helps return oil during short operating periods.

Control sequence

Off cycle — If ambient temperature is below 36 F (2.2 C), cooler heaters are also energized.

Start-up — After control circuit switches on, the prestart process takes place, then microprocessor checks itself, starts pump (if configured) and waits for temperature to stabilize. The controlled pulldown feature limits compressor loading on start-up to reduce demand on start-up and unnecessary compressor usage.

Capacity control — On the first call for cooling, the microprocessor starts initial compressor and fan stage on lead circuit.

As additional cooling is required, the capacity of the compressor is increased by changing the position of the slide valve. As the load increases above the compressor's capacity, another compressor is started and both staged together.

The speed at which capacity is added or reduced is controlled by temperature deviation from set point and rate of temperature change of chilled fluid.

Controls (cont)

The main base board (MBB) responds to the supply chilled water temperature to cycle the compressors to match cooling load requirements.

The minimum load control valve is energized by the MBB. The valve allows hot gas to pass directly into the cooler circuit on the initial step of unloading, permitting the unit to operate at lower loads with less compressor cycling.

Sensors

Thermistors are used to control temperature-sensing inputs to the microprocessor. No additional thermistor sensors are required for optional leaving chilled water temperature, return water, or outdoor air reset.

The following temperaure sensors are provided on 30XA units:

- Cooler leaving chilled fluid temperature (T1)
- Cooler entering fluid (return) temperature (T2)
- Outside-air temperature (T9)
- Space temperature (T10)

Two refrigerant pressure transducers are used in each circuit for sensing suction and discharge pressure. The microprocessor uses these inputs to control capacity and fan cycling.

The following pressure transducers are provided on 30XA units:

- Saturated condensing temperature
- Cooler saturation temperature
- Oil
- Economizer (sizes 090-500)

Additional information

Detailed information on controls and operation is available in the Controls, Start-Up, Operation, Service, and Troubleshooting guide included with each unit. Packaged Service Training programs are also available. Contact a local Carrier representative for more information.

*Comfort*Link™ controls

Dynamic *Comfort*Link controls keep the chiller on line during periods of extreme operating conditions. If the entering fluid temperature is 95 F (35 C) and the saturated suction temperature is 50 F (10 C) or higher the maximum operating pressure (MOP) feature limits the suction to keep the chiller online. The controller automatically starts the chiller in the unloaded state to eliminate the potential of compressor overload due to high head pressure or low suction pressure. The controller will equalize run time on each circuit through the lead/lag feature. If a circuit becomes disabled, the controller will automatically set the active circuit to lead, keeping the chiller online at a reduced capacity.

Standard *Comfort*Link controls with Touch Pilot™ display — A touch screen display for convenient access to unit status, operation, configuration and troubleshooting diagnostics capability is standard on 30XA units. The VGA LCD display provides clear language information in English, French, Spanish, or Portuguese. The weatherproof enclosure enables the display to be ideally suited for outdoor applications.

Low-temperature override — This feature prevents LCWT (leaving chilled water temperature) from overshooting the set point and possibly causing a nuisance trip-out by the freeze protection.

High-temperature override — This feature allows the chiller to add capacity quickly during rapid load variations.

Temperature reset

The energy management module is required for 4 to 20 mA reset of LCWT in constant fluid systems. Reset by return fluid, outdoor-air temperature, or space temperature does not require this option. Reset reduces compressor power usage at part load when design LCWT is not necessary. Humidity control should be considered since higher coil temperatures resulting from reset will reduce latent heat capacity. Three reset options are offered, based on the following:

Return-fluid temperature increases LCWT set point as return (or entering) fluid temperature decreases (indicating load decrease). Option may be used in any application where return fluid provides accurate load indication. A limitation of return fluid reset is that LCWT may only be reset to value of design return fluid temperature.

Outdoor-air temperature increases the LCWT as outdoor ambient temperature decreases (indicating load decrease). This reset should be applied only where outdoor ambient temperature is an accurate indication of load.

Space temperature increases the LCWT as space temperature decreases (indicating load decrease). This reset should be applied only where space temperature is an accurate indication of load. An accessory space temperature thermistor is required.

For details on applying a reset option, refer to the Controls, Start-Up, Operation, Service and Troubleshooting literature shipped with the unit. Obtain ordering part numbers for reset option from the Packaged Chiller Builder program or contact a local Carrier representative.

Safety

Abnormal conditions — All control safeties in the chiller operate through compressor protection board or control relay and microprocessor.

Loss of feedback signal to the MBB will cause the compressor(s) to shut down. For other safeties, microprocessor makes appropriate decision to shut down a compressor due to a safety trip or bad sensor reading and displays appropriate failure code on the display. Chiller holds in safety mode until reset; it then reverts to normal control when unit is reset.

Low-pressure safety — Safety cuts out if system pressure drops below minimum.

High-pressure cutout — Switch shuts down compressors if compressor discharge pressure increases to 305 psig (2102.7 kPa).

Compressor anti-cycling — This feature limits compressor cycling.

Loss of flow protection — Proof of flow switches are standard and installed on all 30XA chillers.

Sensor failures — Failures are detected by the microprocessor.

Accessory controls

Demand can be limited by controlling the chiller capacity through the demand limit control (the energy management module is required for this function). This FIOP/accessory interfaces with the microprocessor to control the unit so that the chiller's kW demand does not exceed its setting. It is activated from an external switch or a 4 to 20 mA signal.

The standard *Comfort*Link™ controller is programmed to accept various accessory temperature reset options (based on outdoor-air temperature [standard], return-fluid temperature [standard], or space temperature [which requires accessory thermistor]), that resets the LCWT. An accessory thermistor (T10) is required if space temperature reset is selected. The Energy Management Module (EMM) is only required for temperature reset that is initiated by a 4 to 20 mA signal.

Demand limit

If the demand limit is applied, it limits the total power draw of unit to a selected point by controlling the number of operational compressors during periods of peak electrical demand.

The energy management module is required for either 2-step or 4 to 20 mA demand limit.

Electronic expansion valve (EXV)

The EXV controls refrigerant flow to the cooler for different operating conditions by varying an orifice size to increase or decrease the flow area through the valve based on microprocessor input. The orifice is positioned by a stepper motor through approximately 3,600 discrete steps and is monitored every three seconds.

Diagnostics

The microprocessor may be put through a service test (see Controls, Start-Up, Operation, Service, and Troubleshooting literature). Service test confirms microprocessor is functional, informs observer through display the condition of each sensor and switch in chiller, and allows observer to check for proper operation of fans and compressors.

Default settings

To facilitate quick start-ups, 30XA chillers with *Comfort*Link controls are pre-configured with a default setting that assumes stand-alone operation supplying 44 F (6.6 C) chilled water.

Configuration settings will be based on any options or accessories included with the unit at the time of manufacturing.

Date and time are set to U.S.A. Eastern Time zone and will need reconfiguring based on location and local time zone. If operation based on occupancy scheduling is desired, schedule must be set during installation.

Ice duty

*Comfort*Link controls have the capability of reduced leaving fluid temperature operation for thermal storage, or ice duty. The optional Energy Management display includes input contacts for the "ice done" signal generated by the thermal storage control system. The ice duty feature may be configured to start on an external input command or by the *Comfort*Link standard internal scheduling function. The ice duty function requires brine modification for leaving fluid temperatures below 40 F (4.4 C). Ice duty may be used in combination with any other standard features offered by the energy management module and *Comfort*Link controls.

The production of ice, which is stored for peak cooling demands, can significantly decrease energy costs. The unit produces ice (normally at night) by supplying ice storage tanks with low temperature cooling fluid. The chiller takes advantage of reduced ambient conditions at night for ice-making mode, so the capacity suffers a lower penalty for the low leaving fluid temperatures.

At peak cooling demands, the chiller and the stored ice may share the cooling load to reduce operating costs. The thermal storage system may potentially reduce the size of the chiller plant required to meet demand loads.

Control and power wiring schematic

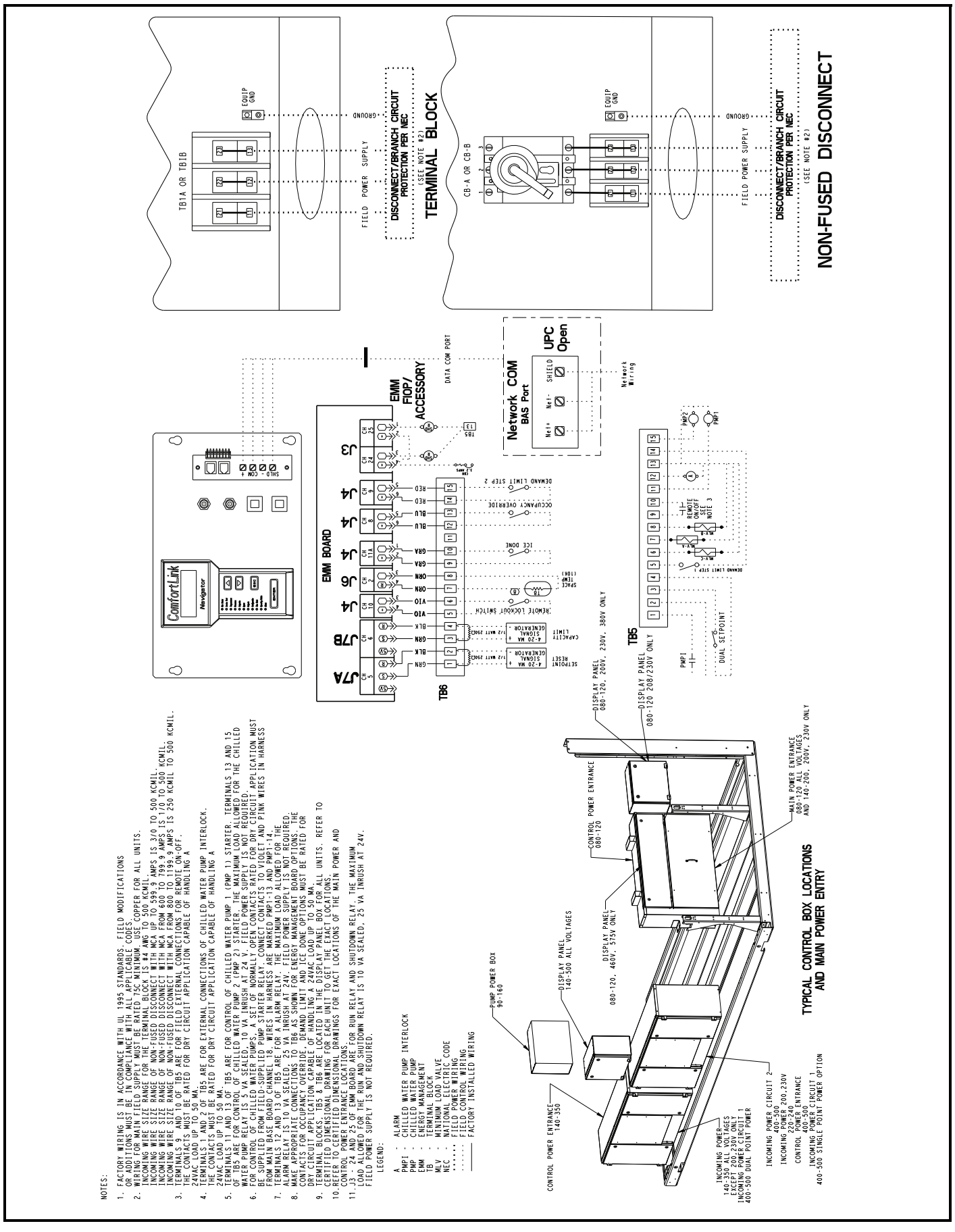

Application data

Chiller location and clearances

Do not locate near sound sensitive areas without proper acoustic consideration. For applications requiring mounting a chiller on a building rooftop, consideration should be given to using rubber-in-shear or spring isolators to minimize structure-borne transmission. Unit must be level when installed to ensure proper oil return to the compressors. Clearances must be provided around chillers for airflow, service and local code requirements. See dimensional drawings for specific unit clearance requirements. Ensure adequate clearance between adjacent chillers is maintained. A minimum of 10 ft (3.0 m) is recommended. Chiller fan discharge must be at least as high as adjacent solid walls. Installation in pits is not recommended.

Minimum clearances

The recommended minimum clearance to ensure proper airflow through the condenser coils and to allow fan maintenance is as shown below.

Acceptable clearance between the chiller and a single wall may be reduced to 3 ft (914.4 mm) on one side or end opposite the control panel without sacrificing performance. Clearances between chillers in dual chiller applications may be reduced to 6 ft (1.8 m) on one side without sacrificing performance.

For acceptable clearance with layouts involving more than 2 chillers, please contact application engineering.

MULTIPLE UNIT SEPARATION

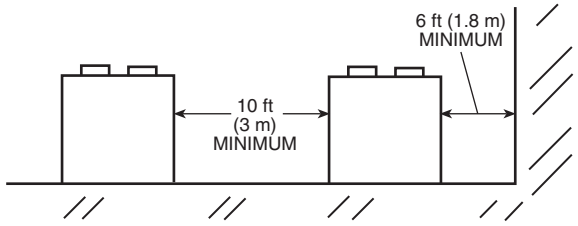

ALIGNED SIDE BY SIDE

Strainers

A screen strainer with a minimum screen size of 20 mesh must be installed a maximum of 10 ft (3.0 m) from the unit to prevent debris from damaging internal tubes of the cooler.

Oversizing chillers

Oversizing chillers by more than 15% at design conditions must be avoided as the system operating efficiency is adversely affected (resulting in greater or excessive electrical demand). When future expansion of equipment is anticipated, install a single chiller to meet present load requirements and add a second chiller to meet the additional load demand. It is also recommended that 2 smaller chillers be installed where operation at minimum load is critical. The operation of a smaller chiller loaded to a greater percentage over minimum is preferred to operating a single chiller at or near its minimum recommended value. Minimum load control should not be used as a means to allow oversizing chillers. Minimum load control should be given consideration where substantial operating time is anticipated below the minimum unloading step.

Cooler water temperature

1. Maximum leaving chilled water temperature (LCWT) for the unit is 60 F (15.5 C). Unit can start and pull down with up to 95 F (35 C) entering-water temperature. It is recommended that entering-water temperature not exceed 70 F (21.1).
2. Minimum LCWT is 40 F (4.4 C). For leaving-water temperatures below 39.9 F (4.4 C) an inhibited antifreeze solution is required. Application of chiller at leaving fluid temperatures lower than 30 F (–1.1 C) is possible by ordering the factory-installed medium temperature brine option, and is generally best accomplished by employing the DX cooler option. The flooded cooler may also be used on applications with leaving fluid temperatures lower than 30 F (–1.1 C) by strictly adhering to the limits presented in the Options and Accessories section.

NOTE: Water flowing through cooler should not exceed 100 F (37.8 C).

Cooler flow/range

Ratings and performance data in this publication are for a cooling temperature rise of 10° F (5.6° C). The 30XA chillers may be operated at a different temperature rise, providing flow limits are not exceeded and corrections to system guidelines are made. For minimum and maximum cooler flow rates, see the Minimum and Maximum Cooler Flow Rates table. A high flow rate is generally limited by the maximum pressure drop that can be tolerated by the unit. The 30XA chillers are designed for a full load temperature rise of 5° to 20° F (2.8° to 11.1° C). Use the Carrier Selection Program to obtain the rating if a temperature rise other than 10° F (5.6° C) is used. The DX cooler option is the preferred choice for applications with leaving fluid temperatures lower than 30 F (–1.1 C).

Minimum cooler flow (maximum cooler temperature rise) — The minimum cooler flow for all units is shown in the Minimum and Maximum Cooler Flow Rates table. When system design conditions require a lower flow (or higher rise) than the minimum allowable cooler flow, follow the recommendations below.

a. Multiple smaller chillers may be applied in series, each providing a portion of the design temperature rise.
b. Cooler fluid may be recirculated to raise the flow rate to the chiller. The mixed temperature entering the cooler must be maintained to a minimum of at least 5° F (2.8° C) above the LCWT and a maximum of no more than 20° F (11.1° C) above the LCWT.

NOTE: Recirculation flow is shown below.

RECIRCULATION FLOW

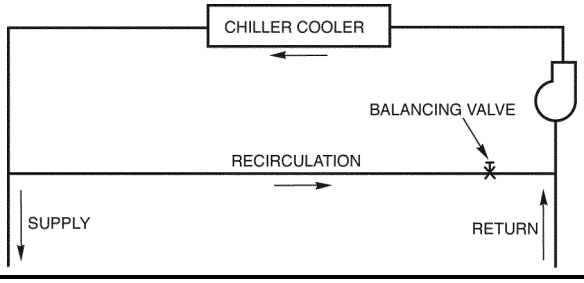

Maximum cooler flow — The maximum cooler flow (approximately 5° F [2.8° C] rise) results in a practical maximum pressure drop through cooler.

Return fluid may bypass the cooler to keep the pressure drop through the cooler within acceptable limits. This permits a higher delta T with lower fluid flow through cooler and mixing after the cooler.

NOTE: Bypass flow is shown below.

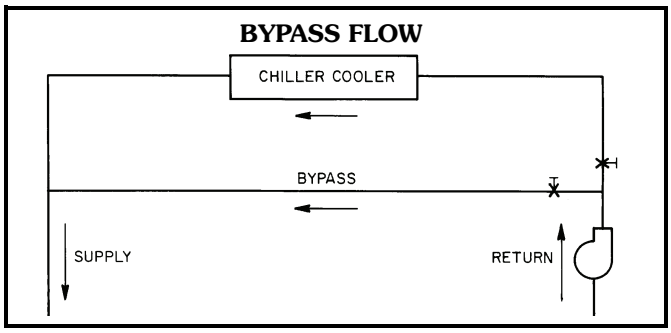

Variable cooler flow rates

Variable flow rates may be applied to a standard chiller. The unit will, however, attempt to maintain a constant leaving chilled water temperature. In such cases, the minimum flow must be in excess of the minimum flow given in the Minimum and Maximum Cooler Fluid Flow Rates table, adjusted for any glycol in the system, and the minimum fluid volume must be in excess of 3 gallons per ton (3.2 L per kW). The flow rate must change at a rate less than 10% per minute. Apply a minimum of 6 gallons per ton (6.5 L per kW) water loop volume if the flow rate changes more rapidly.

The 30XA chiller is available without a hydronic pumping package or with either of 2 variations of a hydronic pumping package. One of these hydronic options offers a constant-speed pumping package, and the other offers a variable-speed drive. Traditional pumping systems incorporate constant speed drives and waste energy by relying upon throttling valves as the only means to control flow. A more energy-efficient approach to this issue is use a variable-speed drive. The 30XA chiller is now available with an optional variable-speed hydronic package with sensorless technology to meet this market requirement.

The major cost of a pump over its lifetime will be energy consumption and maintenance, and both of these factors will be reduced using variable-speed pumping. Energy is saved by the combination of lowering the pump speed in conjunction with the resulting lowering of pumping system resistance when conditions permit. Maintenance benefits from the sensorless pumping system include the lack of the need to maintain remote sensors as well as the beneficial effects of lower speed/pressure on the pump and pump bearings.

Another advantage associated with variable-speed pumping is reduced system noise in part load operation when the pump is running at lower speeds. The variable-speed pump package offered on the 30XA chiller is offered both in single and dual-pump designs. In the dual pump case, in which one pump is the back up of the other, each pump connection is fitted with an isolation valve which allows one pump to be isolated for service with the other pump still operating.

As already mentioned, the 30XA variable-speed hydronic package employs sensorless technology. The term "sensorless" means that no remote sensors are required for pump operation. The sensorless pump control monitors system requirements from pump speed and power. The hydronic unit is provided with a pre-defined control curve to automatically adjust speed at all operating conditions. Pump performance and characteristic curves for multiple speeds are programmed into the speed-controller memory. The pre-programmed information includes power, pressure and flow throughout the entire range of the pump. During chiller operation, the power and speed of the pump are monitored. This enables the controller to establish the hydraulic performance, and to position the pump's head-flow characteristic. Although this curve is pre-defined, it is also fully field adjustable. The pump has a graphical user interface, and the graphic keypad can also be used to allow manual pump speed control.

This variable-speed pumping system easily connects to BMS systems (BACnet is standard, and LON can be obtained via special order). The pumps may be controlled directly by the BMS system. The sensorless feature can also be switched off to allow the use of either a 0 to 10 VDC signal or a 0 to 20 mA signal.

For multiple chiller applications employing the variable-speed pumping package, such as chillers operated in a parallel arrangement, the drives must be connected by control wiring and set up to run the same speed. This is to prevent surging or hunting of the speed setpoint. One drive will act as the master while the other slave drive will run at the same speed. The master drive may be control by a 0 to 10 VDC signal, a 0 to 20 mA signal, or a building management system (BMS). The drive must be configured to not use the sensorless function in this arrangement.

A typical example of a chiller operating with a variable-speed pumping system would be the case when the user requires the chiller to operate with a constant fluid temperature difference as the load is reduced. This can be accomplished with the 30XA variable-speed pumping package with the understanding that the flow must never go below the minimum allowable value (see Minimum and Maximum Cooler Flow Rates table on page 129). Once that limit is reached, the flow cannot be further reduced. To accomplish this purpose, the minimum speed of the drive is preset based upon the chiller size that is being employed.

As a specific example, let us say the schedule calls for a 100-ton, fresh-water chiller, and it is desired to have a constant 10-degree temperature difference in part load operation (say 54 to 44 F). The schedule calls for 240 gpm at full load based upon the desired capacity and the fluid temperature difference. A constant temperature difference in part load operation is essentially the same as providing flow in direct proportion to chiller load. In the present example, this means that 100% load will run at the scheduled 240 gpm, 90% load will be 216 gpm, etc. down to the minimum allowable flow for this unit size, which, in the case of a 30XA100 (at standard cooler pass), is 101 gpm. The chiller in this example will therefore be able to run

down to approximately 42% load while basically maintaining a constant 10 degree fluid temperature difference, and then the flow will be held constant for all lower loads. Throughout the range in which flow is reduced (down to minimum allowable flow), the pump speed is proportionally reduced, resulting in pump energy savings.

Fluid loop volume

The volume in circulation must equal or exceed 3 gal. per nominal ton (3.2 l/kW) of cooling for temperature stability and accuracy in normal air conditioning applications. In process cooling applications, or for operation at ambient temperature below 32 F (0° C) with low loading conditions, there should be from 6 to 10 gal. per ton (6.5 to 10.8 l/kW). To achieve this volume, it is often necessary to install a tank in the loop.

Tank should be baffled to ensure there is no stratification and that water (or brine) entering tank is adequately mixed with liquid in the tank.

The piping between the chiller and the fluid loop volume tank can be done to allow the tank to be on the return side of the chiller (tank piped to chiller inlet) or the supply side of the chiller (tank piped to the chiller outlet). However, it is recommended that the tank be piped to the return side of the chiller to buffer any changes in lead to allow more stable chiller operation.

TANK INSTALLATION

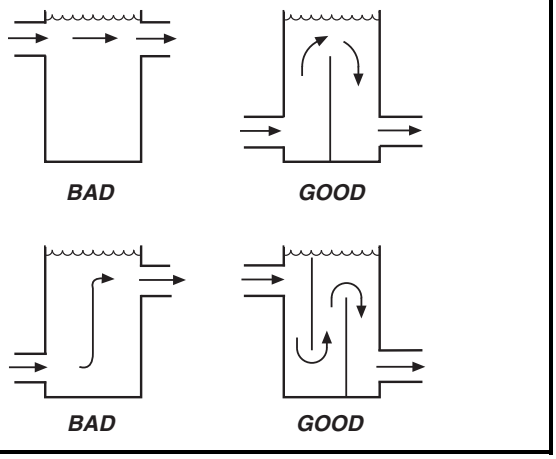

Cooler fouling factor

The fouling factor used to calculate tabulated ratings is 0.0001 $ft^2 \cdot hr \cdot °F/Btu$ (.000018 $m^2 \cdot °C/W$). As fouling factor is increased, both unit capacity and EER decrease. The impact of the fouling factor on performance varies significantly with chiller size and application conditions. Ratings must be determined by the Carrier Selection Program.

Cooler and optional hydronic system freeze protection

Freeze protection for the cooler and the optional hydronic system is standard on all 30XA air-cooled chillers with flooded coolers and optional on chillers with DX coolers. Flooded cooler units are protected from freezing down to 0° F (–18 C) through the cooler heaters and control algorithms. If flooded cooler chillers control the chilled water pump/valves, allowing for flow through the cooler, the unit is protected from freezing down to –20 F (–29 C). Chillers equipped with DX cooler and optional heaters are protected from freezing down to –20 F (–29 C). Since power is sometimes lost for extended periods during winter storms, freeze protection provided by heater tapes will be effective only if a back-up power supply can be assured for the unit's control circuit, heater and cooler pump. If not protected with an anti-freeze solution, draining the cooler and outdoor piping is recommended if the system will not be used during freezing weather conditions.

Two conditions that must be considered when determining antifreeze concentration are both leaving water set point and ambient freeze conditions. Both of these parameters can help determine the recommended concentration level. Higher concentration must be used to adequately protect the machine.

NOTE: Use only antifreeze solutions approved for heat exchanger duty.

For applications in which the leaving fluid temperature set point is less than 40 F (4.4 C), a suitable inhibited antifreeze solution must be used. The solution concentration must be sufficient to protect the chilled water loop to a freeze protection (first crystals) concentration of at least 15° F (8.3° C) below the leaving fluid temperature set point.

If the chiller refrigerant or fluid lines are in an area where ambient conditions fall below 34 F (1.1° C), it is highly recommended that an antifreeze solution be added to protect the unit and fluid piping to a temperature of 15° F (8.3° C) below the lowest anticipated ambient temperature.

Select concentration based on either burst or freeze protection as dictated by the application. If the chiller does not operate during the winter, and a start-up is not expected, a burst protection concentration is recommended. This concentration may not be high enough to pump the fluid through the unit. Burst protection is typically a lower concentration that will provide better performance from the machine. If the chiller does operate during winter, a freeze protection concentration is recommended. This concentration will be high enough to keep the fluid in a condition that it can be pumped at low ambient conditions.

IMPORTANT: Glycol antifreeze solutions are highly recommended since heater tapes provide no protection in the event of a power failure.

Consult glycol fluid manufacturers for burst protection recommendations and fluid specifications.

MINIMUM AND MAXIMUM COOLER FLOW RATES

ITEM					MINIMUM		MAXIMUM	
Cooler Leaving Water Temperature*					40 F (4.4 C)		60 F (15 C)	
Cooler Entering Water Temperature†					45 F (7.2 C)		70 F (21.1 C)	
30XA UNIT SIZE	Nominal Flow Rate		Cooler	Number of Passes	Minimum Flow Rate		Maximum Flow Rate	
	(gpm)	(L/s)			(gpm)	(L/s)	(gpm)	(L/s)
80	180.4	11.4	Standard, Flooded	2	95	6	379	23.9
			Plus One Pass, Flooded	3	43	2.7	192	12.1
			Minus One Pass, Flooded	1	196	12.4	782	49.3
82	172.8	10.9	DX Cooler	—	86	5.4	346	21.8
90	201.9	12.7	Standard, Flooded	2	101	6.4	403	25.4
			Plus One Pass, Flooded	3	43	2.7	200	12.6
			Minus One Pass, Flooded	1	229	14.4	917	57.9
92	193.7	12.2	DX Cooler	—	97	6.1	387	24.4
100	225.5	14.2	Standard, Flooded	2	101	6.4	403	25.4
			Plus One Pass, Flooded	3	43	2.7	200	12.6
			Minus One Pass, Flooded	1	229	14.4	917	57.9
102	214.3	13.5	DX Cooler	—	107	6.7	429	27.0
110	244.9	15.5	Standard, Flooded	2	125	7.9	501	31.6
			Plus One Pass, Flooded	3	61	3.8	244	15.4
			Minus One Pass, Flooded	1	254	16	1014	64
112	235.2	14.8	DX Cooler	—	118	7.4	470	29.6
120	264.8	16.7	Standard, Flooded	2	125	7.9	501	31.6
			Plus One Pass, Flooded	3	73	4.6	293	18.5
			Minus One Pass, Flooded	1	281	17.7	1124	70.9
122	254.7	16.0	DX Cooler	—	127	8.0	509	32.1
140	317.8	20.1	Standard, Flooded	2	134	8.5	538	33.9
			Plus One Pass, Flooded	3	73	4.6	293	18.5
			Minus One Pass, Flooded	1	324	20.4	1296	81.8
142	303.5	19.1	DX Cooler	—	152	9.6	607	38.2
160	365.1	23	Standard, Flooded	2	165	10.4	660	41.6
			Plus One Pass, Flooded	3	98	6.2	391	24.7
			Minus One Pass, Flooded	1	354	22.3	1418	89.5
162	347	21.9	DX Cooler	—	174	10.9	694	43.7
180	409.6	25.8	Standard, Flooded	2	202	12.7	807	50.9
			Plus One Pass, Flooded	3	73	4.6	391	24.7
			Minus One Pass, Flooded	1	416	26.2	1662	104.9
182	401.7	25.3	DX Cooler	—	201	12.6	803	50.6
200	463.9	29.3	Standard, Flooded	2	223	14.1	892	56.3
			Plus One Pass, Flooded	3	98	6.2	391	24.7
			Minus One Pass, Flooded	1	458	28.9	1833	115.6
202	447.1	28.2	DX Cooler	—	224	14.1	894	56.3
220	505.9	31.9	Standard, Flooded	2	235	14.8	941	59.4
			Plus One Pass, Flooded	3	122	7.7	489	30.9
			Minus One Pass, Flooded	1	501	31.6	2004	126.4
240	545.8	34.4	Standard, Flooded	2	266	16.8	1063	67.1
			Plus One Pass, Flooded	3	147	9.3	587	37
			Minus One Pass, Flooded	1	538	33.9	2151	135.7
260	600.3	37.9	Standard, Flooded	2	257	16.2	1027	64.8
			Plus One Pass, Flooded	3	141	8.9	562	35.5
			Minus One Pass, Flooded	1	584	36.8	2334	147.3
280	642.2	40.5	Standard, Flooded	2	293	18.5	1173	74
			Plus One Pass, Flooded	3	141	8.9	562	35.5
			Minus One Pass, Flooded	1	620	39.1	2481	156.5
300	687.5	43.4	Standard, Flooded	2	327	20.6	1308	82.5
			Plus One Pass, Flooded	3	174	11	697	44
			Minus One Pass, Flooded	1	687	43.3	2750	173.5
325	733.4	46.3	Standard, Flooded	2	361	22.8	1442	91
			Plus One Pass, Flooded	3	211	13.3	843	53.2
			Minus One Pass, Flooded	1	724	45.7	2897	182.8
350	775.4	48.9	Standard, Flooded	2	379	23.9	1516	95.6
			Plus One Pass, Flooded	3	244	15.4	978	61.7
			Minus One Pass, Flooded	1	767	48.4	3068	193.6
400	917.6	57.9	Standard, Flooded	1	501	31.6	2004	126.4
			Plus One Pass, Flooded	—	—	—	—	—
			Minus One Pass, Flooded	—	—	—	—	—
450	1019.3	64.3	Standard, Flooded	1	501	31.6	2004	126.4
			Plus One Pass, Flooded	—	—	—	—	—
			Minus One Pass, Flooded	—	—	—	—	—
500	1092.8	68.9	Standard, Flooded	1	501	31.6	2004	126.4
			Plus One Pass, Flooded	—	—	—	—	—
			Minus One Pass, Flooded	—	—	—	—	—

*For applications requiring cooler leaving water temperature operation at less than 40 F (4.4 C), the units require the use of antifreeze and application may require the brine option. Contact your local Carrier representative for more information.

†For applications requiring cooler entering water temperature operation at less than 45 F (7.2 C), contact your local Carrier representative for unit selection using the Carrier electronic catalog.

NOTES:
1. The 30XA units will start and pull down with loop temperatures up to 95 F (35 C).
2. Nominal flow rates required at AHRI conditions 44 F (7 C) leaving fluid temperature, 54 F (12 C) entering water temperature, 95 F (35 C) ambient. Fouling factor 0.00010 ft^2-hr-F/Btu (0.000018 m^2-K/kW).
3. To obtain proper temperature control, cooler loop fluid volume must be at least 3 gal/ton (3.23 L/kW) of chiller nominal capacity for air conditioning and at least 6 gal/ton (6.5 L/kW) for process applications or systems that must operate in low ambient temperatures (below 32 F [0° C]).

Application data (cont)

High ambient temperature operation

High outdoor ambient chiller start-up and operation is possible for standard 30XA chillers at ambient temperatures up to 125 F (52 C) at nominal voltage. For applications approaching these temperatures, it may be advisable to select the high ambient temperature option to increase fan airflow. Further, the high ambient temperature option is required for 30XA400-500 chillers under the following circumstances:

- ambient temperatures at or above 100 F (37.8 C)
- multi-chiller configurations.

Low ambient temperature operation

Units will start and operate down to 32 F (0° C) as standard. Operation to –20 F (–29 C) requires optional low ambient head pressure control as well as wind baffles (field fabricated and installed to all units for operation below 32 F [0° C]) if wind velocity is anticipated to be greater than 5 mph (8 km/h). Inhibited propylene glycol or other suitable corrosion-resistant antifreeze solution must be field supplied and installed in all units for unit operation below 34 F (1.1 C). Solution must be added to fluid loop to protect loop down to 15 F (8.3 C) below minimum operating ambient temperature. Concentration should be based on expected minimum temperature and either "Burst" or "Freeze" protection levels. At least 6 gal. per ton (6.5 l/kW) of water volume is the recommended minimum for a moderate system load.

Altitude correction factors

Correction factors must be applied to standard ratings at altitudes above 2000 ft (609.6 m) using the following multipliers:

ALTITUDE CORRECTION FACTORS

ALTITUDE		CAPACITY MULTIPLIER	COMPRESSOR POWER MULTIPLIER
(ft)	(m)		
2,000	609.6	0.99	1.01
4,000	1219.2	0.98	1.02
6,000	1828.8	0.97	1.03
8,000	2438.4	0.96	1.04
10,000	3048	0.95	1.05

Condenser airflow — Airflow restrictions on units with standard fans will affect the unit capacity, condenser head pressure, and compressor power input. Correction factors to be applied for external static restrictions up to 0.2 in. wg (50 Pa) are as follows:

EXTERNAL STATIC		CAPACITY MULTIPLIER	COMPRESSOR POWER MULTIPLIER
in. wg	Pa		
0.0	0.0	1.000	1.00
0.1	25	0.986	1.01
0.2	50	0.968	1.03

Multiple chillers

Where chiller capacities greater than can be supplied by a single 30XA chiller are required, or where stand-by capability is desired standard flooded cooler chillers may be installed in parallel or series, where as chillers with the DX cooler option may be installed in parallel. Units may be of the same or different sizes with this piping arrangement. However, for parallel chiller applications, cooler flow rates must be balanced to ensure proper flow to each chiller.

Unit software is capable of controlling two units as a single plant by making use of the dual chiller control feature. Refer to the Controls, Start-up, Operation, Service and Troubleshooting guide for further details. The accessory Chillervisor System Manager can be used to ensure proper staging sequence of up to 8 chillers in parallel. Refer to the accessory Chillervisor System Manager installation instructions for further details.

If the dual chiller algorithm is used, and the machines are installed in parallel, an additional chilled water sensor must be installed for each chiller (to provide the required hardware, a dual chiller accessory kit is available from the factory). Install one thermistor and well per chiller in the common leaving water header. Chillers installed in series do not require additional sensors.

Parallel chiller control with dedicated pumps is recommended. The chiller must start and stop its own water pump located in its own piping. Check vales are required at the discharge of each pump (*when the factory hydronic package option is chosen, and* ***dual pumps*** *are selected, the check valves are automatically supplied*). If pumps are not dedicated for each chiller, then isolation valves are required. Each chiller must open and close its own isolation valve through the unit control (the valve must be connected to the pump outputs).

Hydronic pump packages may not be applied in series applications. Refer to the chiller piping configurations shown in the parallel dual chiller operation figure.

Dual chiller control

The *Comfort*Link™ controller allows 2 chillers (piped in parallel or series) to operate as a single chilled water plant with standard control functions coordinated through the master chiller controller. This standard *Comfort*Link feature requires a communication link between the 2 chillers.

There are several advantages to this type of control:

- Redundancy (multiple circuits)
- Better low load control (lower tonnage capability)
- Lower rigging lift weights (2 machines rather than 1 large machine)
- Chiller lead-lag operation (evens the wear between the two machines)

Condenser coil protection (*Enviro-Shield*™)

Refer to the environmental selection guides for more information. If the standard Novation (microchannel) coil does not meet the corrosion requirements for a given application, additional coil options are available. For specific geographical recommendations, please refer to the NACO Packaged Chiller Builder program.

Aluminum fin/copper tube coils are constructed of seamless copper tubes mechanically bonded to aluminum fins. The fins have wavy enhancements. These condenser coils are recommended with remote cooler applications. These coils are not recommended for corrosive environments.

Pre-coated aluminum-fin coils have a durable epoxy-phenolic coating applied to the fin prior to the fin stamping process to provide protection in mildly corrosive coastal environments. Pre-coated coils have an inert barrier between the aluminum fin and copper tube. This barrier

electrically disconnects the dissimilar metals to minimize the potential for galvanic corrosion. This economical option provides substantial corrosion protection beyond the standard uncoated coil construction.

Copper-fin coils provide increased corrosion resistance compared to aluminum fin coils. All-copper coils eliminate bimetallic construction to eliminate the potential for galvanic corrosion. Application in industrial environments is not recommended due to potential attack from sulfur, sulfur oxide, nitrogen oxides, carbon and several other industrial airborne contaminants.

E-coated Novation® coils have an extremely flexible and durable epoxy coating uniformly applied to all coil surfaces. Unlike brittle phenolic dip and bake coatings, e-coat provides superior protection with unmatched flexibility, edge coverage, metal adhesion, thermal performance and most importantly, corrosion resistance. E-coated coils provide this protection since all coil surfaces are completely encapsulated from environmental contamination. This option provides the best protection for Novation coil technology.

E-coated aluminum-fin coils have the same flexible and durable epoxy coating as e-coated Novation coils. This option provides better protection compared to standard or pre-coated aluminum-fin coils in many environments.

E-coated copper-fin coils have the same flexible and durable epoxy coating as other e-coated coils. However, this option combines the natural salt and environmental resistance of all-copper construction with the highest level of corrosion protection within the round-tube, plate-fin type of coils.

Optional hydronic system selection

Select pump flow from resulting chiller selection and total pressure loss in the system plus the chiller internal pressure loss.

NOTE: Maximum flow (gpm [L/s]), pressure and pump hp must not exceed maximum indicated on pump curve.

NOTE: Optional hydronic system is available in both constant-speed and VFD configurations, as described in the "Variable Cooler Flow Rates" section.

Pump flow can be reduced by using the factory-supplied combination valve up to 10%. Beyond that, impeller trimming is recommended to reduce energy consumption. Follow local codes or ASHRAE 90.1 recommendations. Contact your Carrier representative for the specific amount of trim required.

PARALLEL DUAL CHILLER OPERATION

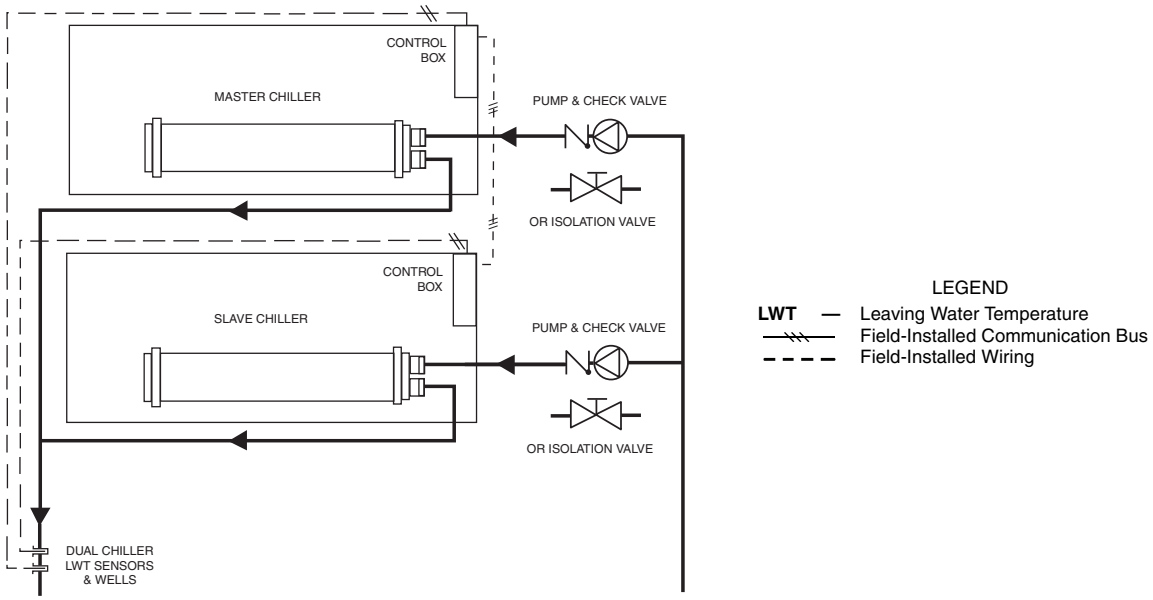

SERIES DUAL CHILLER OPERATION

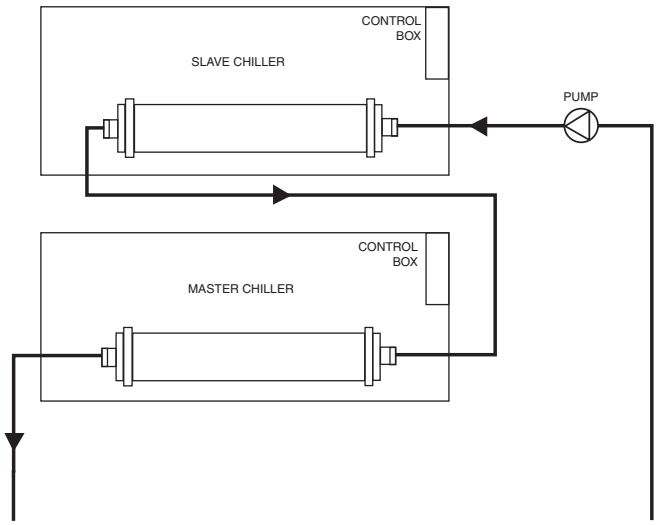

The AquaForce® 30XA chiller will require a field-supplied expansion tank when the optional pump package is provided.

The expansion tank is based on fluid type, temperature range, fluid pressure and loop volume.

Parallel chillers with hydronic packages require that pump inlets be equalized to prevent pump cavitation. If more than one expansion tank is to be used in the chiller water loop, the expansion tanks must be located together in the common pump suction header. If expansion tank relocation is required for parallel chiller configuration, all materials needed for expansion tank relocation are field supplied. Appropriate measures must be taken for freeze protection.

NOTE: It is recommended for units with the hydronic package that an inlet isolation (shutoff) valve be placed exterior to the unit to allow removal and service of the entire pump assembly, if necessary. The hydronic package is supplied from the factory with a combination valve for isolation of leaving water. Also, if the unit is isolated with valves, a properly sized pressure relief valve is recommended and should be installed in the piping between the unit and the valves, following all applicable local codes.

Air separation

For proper system operation, it is essential that water loops be installed with proper means to manage air in the system. Free air in the system can cause noise, reduce terminal output, stop flow, or even cause pump failure due to pump cavitation. For closed systems, equipment should be provided to eliminate all air from the system.

The amount of air that water can hold in solution depends on the pressure and temperature of the water/air mixture. Air is less soluble at higher temperatures and at lower pressures. Therefore, separation can best be done at the point of highest water temperature and lowest pressure. Typically, this point would be on the suction side of the pump as the water is returning from the system or terminals. This is generally the optimal place to install an air separator, if possible.

Install automatic air vents at all high points in the system. (If the 30XA unit is located at the high point of the system, a vent can be installed on the piping leaving the heat exchanger on the 1/4 in. NPT female port.)

Install an air separator in the water loop, at the place where the water is at higher temperatures and lower pressures — usually in the chilled water return piping. On a primary-secondary system, the highest temperature water is normally in the secondary loop, close to the decoupler. Preference should be given to that point on the system. In-line or centrifugal air separators are readily available in the field.

It may not be possible to install air separators at the place of the highest temperature and lowest pressure. In such cases, preference should be given to the points of highest temperature. It is important that the pipe be sized correctly so that free air can be moved to the point of separation. Generally, a water velocity of at least 2 feet per second (0.6 m per second) will keep free air entrained and prevent it from forming air pockets.

Automatic vents should be installed at all physically elevated points in the system so that air can be eliminated during system operation. Provisions should also be made for manual venting during the water loop fill.

IMPORTANT: Automatic vents should be located in accessible locations for maintenance purposes and protected from freezing.

Electrical/utility interests

Energy management — Use of energy management practices can significantly reduce operating costs, especially during off-peak modes of operation. Demand limiting and temperature reset are two techniques for accomplishing efficient energy management. See Demand Limiting (also called load shedding) section below for further details.

Demand limiting (load shedding)

When a utility's demand for electricity exceeds a certain level, loads are shed to keep electricity demand below a prescribed maximum level. Typically, this happens on hot days when air conditioning is most needed. The energy management module (EMM) can be added to accomplish this reduction. Demand may be limited on the unit by resetting water temperature, or by unloading the chiller to a given predetermined percentage of the load. Demand limit may also be driven by an external 4 to 20 mA signal. These features require a signal from an intelligent central control. Do not cycle demand limiter for less than 10 minutes on and 5 minutes off. Duty cycling cycles electrical loads at regular intervals regardless of need. This reduces the electrical operating costs of building by "fooling" demand indicating devices. Duty cycling of compressors or fans is not recommended since motor winding and bearing life will suffer from constant cycling.

Remote on-off control

Remote on-off control may be applied by hard-wired connection (see Controls and Troubleshooting literature) or by connection to the Carrier Comfort Network® (CCN) system.

Minimum time to power chiller before start-up

In order to ensure that the oil sump heaters are provided sufficient time to raise the oil sump temperature to the required operating point, power must be applied to the control circuit a minimum or 24 hours prior to chiller start-up. On 30XA chillers, the control circuit obtains its power either from a direct 115-V, single-phase power source or from an optional control transformer on the main 3-phase power supply. The control circuit power source must be energized at least 24 hours prior to chiller start-up.

Guide specifications

Outdoor Air-Cooled Liquid Chiller

HVAC Guide Specifications

Size Range: **80 to 500 Tons, Nominal**
(265 to 1615 kW, Nominal)
Carrier Model Number: **30XA**

Part 1 — General

1.01 SYSTEM DESCRIPTION

Microprocessor controlled, air-cooled liquid chiller utilizing screw compressors and low sound fans.

1.02 QUALITY ASSURANCE

A. Unit shall be rated in accordance with AHRI Standard 550/590 (U.S.A.) latest edition and all units shall be ASHRAE 90.1 compliant.

B. Unit construction shall comply with ASHRAE 15 Safety Code, UL 1995, and ASME applicable codes (U.S.A. codes).

C. Unit shall be manufactured in a facility registered to ISO 9001:2000 Manufacturing Quality Standard.

D. Unit shall be full load run tested at the factory.

1.03 DELIVERY, STORAGE AND HANDLING

A. Unit controls shall be capable of withstanding 150 F (65.5 C) storage temperatures in the control compartment.

B. Unit shall be stored and handled per unit manufacturer's recommendations.

Part 2 — Products

2.01 EQUIPMENT

A. General:

Factory assembled, single-piece chassis, air-cooled liquid chiller. Contained within the unit cabinet shall be all factory wiring, piping, controls, refrigerant charge (R-134a), and special features required prior to field start-up.

B. Unit Cabinet:

1. Frame shall be of heavy-gage, painted galvanized steel.
2. Cabinet shall be galvanized steel casing with a baked enamel powder or pre-painted finish.
3. Cabinet shall be capable of withstanding 500-hour salt spray test in accordance with the ASTM (U.S.A.) B-117 standard.

C. Fans:

1. Condenser fans shall be direct-driven, 9-blade airfoil cross-section, reinforced polymer construction, shrouded-axial type, and shall be statically and dynamically balanced with inherent corrosion resistance.
2. Air shall be discharged vertically upward.
3. Fans shall be protected by coated steel wire safety guards.

D. Compressor/Compressor Assembly:

1. Comprised of semi-hermetic twin screw type compressors.
2. Compressor motor shall be direct drive, 3500 rpm, protected by motor temperature sensors, suction gas cooled motor.
3. Capacity control shall utilize an infinitely modulating slide valve to modulate capacity from 100% to 15% full load.

E. Flooded Cooler:

1. Shall be a mechanically cleanable tubes in a shell-and-tube type cooler with removable heads.
2. Tubes shall be internally enhanced seamless-copper type rolled into tube sheets.
3. Shall be equipped with Victaulic-type water connections.
4. Shell and cooler heads shall be insulated with $^3/_4$-in. PVC foam (closed-cell) with a maximum K factor of 0.28.
5. Design shall incorporate a minimum of 2 or 3 independent refrigerant circuits.
6. Cooler shall be tested and stamped in accordance with ASME Code for a refrigerant working side pressure of 220 psig. Cooler shall have a maximum water-side pressure of 300 psig.
7. Cooler shall have a cooler drain and vent.
8. Low-ambient temperature protection: unit shall have factory-installed cooler heater, and pumpout cycle to protect cooler from ambient temperature freeze down to 0° F (–17.8 C).
9. Cooler shall be provided with a factory-installed flow switch.

F. Condenser:

1. Coil shall be air-cooled Novation® heat exchanger technology (MCHX) and shall have a series of flat tubes containing a series of multiple, parallel flow microchannels layered between the refrigerant manifolds. Novation coils shall consist of a two-pass arrangement. Coil construction shall consist of aluminum alloys for fins, tubes, and manifolds in combination with a corrosion-resistant coating.
2. Tubes shall be cleaned, dehydrated, and sealed.
3. Assembled condenser coils shall be leak tested and pressure tested at 375 psig (2585 kPa).

G. Refrigeration Components:

Refrigerant circuit components shall include replaceable-core filter drier, moisture indicating sight glass, electronic expansion valve, discharge service valves and liquid line service valves, and complete operating charge of both refrigerant R-134a and compressor oil.

H. Controls, Safeties, and Diagnostics:

1. Unit controls shall include the following minimum components:
   a. Microprocessor with non-volatile memory. Battery backup system shall not be accepted.

b. Separate terminal block for power and controls.

c. Separate 115-v power supply to serve all controllers, relays, and control components.

d. ON/OFF control switch.

e. Replaceable solid-state controllers.

f. Pressure sensors installed to measure suction, oil, economizer, and discharge pressure. Thermistors installed to measure cooler entering and leaving fluid temperatures and outside air temperature.

2. Unit controls shall include the following functions:

a. Automatic circuit lead/lag.

b. Capacity control based on leaving chilled fluid temperature and compensated by rate of change of return-fluid temperature with temperature set point accuracy to 0.1° F (0.05° C).

c. Limiting the chilled fluid temperature pull-down rate at start-up to an adjustable range of 0.2° F to 2° F (0.1 to 1.1° C) per minute to prevent excessive demand spikes at start-up.

d. Seven-day time schedule.

e. Leaving chilled fluid temperature reset from return fluid and outside air temperature.

f. Chilled water pump start/stop control.

g. Chiller control for parallel chiller applications without addition of hardware modules and control panels (requires thermistors).

h. Timed maintenance scheduling to signal maintenance activities for strainer maintenance and user-defined maintenance activities.

i. Low ambient protection to energize cooler heaters.

j. Single step demand limit control activated by remote contact closure.

k. Periodic pump start to ensure pump seals are properly maintained during off-season periods.

l. Night time sound mode to reduce the sound of the machine by a user-defined schedule.

3. Diagnostics:

a. The control panel shall include, as standard, a display:

1) Touch screen display consisting of 1/4 VGA LCD (liquid crystal display) with adjustable contrast and backlighting.

2) Display shall allow a user to navigate through menus, select desired options and modify data.

b. Features of the display shall include:

1) Display shall be customizable and allow up to 72 data points.

2) Display shall support both local equipment or network made for remote mount.

3) Display shall allow access to configuration, maintenance, service, set point, time schedules, alarm history and status data.

4) Display shall have one button for chiller on/off.

5) Display shall include three levels of password protection against unauthorized access to configuration and maintenance information, and display set up parameters.

6) Display shall allow for easy connection of a portable hand held technician tool to access information and upload and/or download chiller settings.

7) Display shall be compatible with the Carrier Comfort Network® (CCN) system and provide network alarm acknowledgement or indication and provide capability to fully monitor and control chiller.

8) Display alarms and parameters shall be capable of being displayed in full text.

9) Display shall be capable of displaying the last 50 alarms and will store a snapshot of a minimum of 20 status data parameters for each alarm.

10) Compressor run hours.

11) Compressor number of starts.

12) Compressor current.

13) Time of day:

a) Display module, in conjunction with the microprocessor, must also be capable of displaying the output (results) of a service test. Service test shall verify operation of every switch, thermistor, fan, and compressor before chiller is started.

b) Diagnostics shall include the ability to review a list of the 30 most recent alarms with clear language descriptions of the alarm event. Display of alarm codes without the ability for clear language descriptions shall be prohibited.

c) An alarm history buffer shall allow the user to store no less than 30 alarm events with clear language descriptions, time and date stamp event entry.

d) The chiller controller shall include multiple connection ports for communicating with the local equipment network, the Carrier Comfort Network® (CCN) system and the ability to access all chiller control functions from any point on the chiller.

e) The control system shall allow software upgrade without the need for new hardware modules.

4. Safeties:
   a. Unit shall be equipped with thermistors and all necessary components in conjunction with the control system to provide the unit with the following protections:
      1) Loss of refrigerant charge.
      2) Reverse rotation.
      3) Low chilled fluid temperature.
      4) Motor overtemperature.
      5) High pressure.
      6) Electrical overload.
      7) Loss of phase.
      8) Loss of chilled water flow.
   b. Condenser-fan motors shall have internal overcurrent protection.

I. Operating Characteristics:
   1. Unit shall be capable of starting and running at outdoor ambient temperatures from 32 F (0° C) to 125 F (52 C) for all sizes.
   2. Unit shall be capable of starting up with 95 F (35 C) entering fluid temperature to the cooler.

J. Motors:

Condenser-fan motors shall be totally enclosed, air over, single speed, 3-phase type with permanently lubricated bearings and Class F insulation.

K. Electrical Requirements:
   1. Unit primary electrical power supply shall enter the unit at a single location (all chiller voltage/size combinations shall have the ability to accommodate 2 power supplies to meet job-specific requirements).
   2. Primary electrical power supply shall be rated to operate up to 125 F (52 C) ambient temperature.
   3. Unit shall operate on 3-phase power at the voltage shown in the equipment schedule.
   4. Control points shall be accessed through terminal block.
   5. Unit shall be shipped with factory control and power wiring installed.

L. Chilled Water Circuit:
   1. Chilled water circuit shall be rated for 300 psig (2068 kPa). Units with optional pump package are rated for 150 psig (1034 kPa) working pressure.
   2. Thermal dispersion proof of flow switch shall be factory installed and wired.
   3. Optional hydronic package:
      a. With or without VFD (variable frequency drive) (30XA090-160 units only):
         1) Field pipe connections shall be Victaulic type.
         2) Optional single or primary/stand-by operation pump systems. Dual pump systems shall have a pump discharge check valve.
         3) Pumps shall be vertical in-line, single stage design, and capable of being serviced without disturbing piping connections.
            a) Pump casing shall be of class 30 cast iron.
            b) The impeller shall be of cast bronze, closed type, dynamically balanced, keyed to the shaft and secured by locking cap screw.
            c) The hydronic kit will be provided with a flush line connection to ensure lubrication at the seal face and allow for positive venting of the seal chamber.
            d) Each port shall be fitted with an isolation valve that allow the units to operate in parallel or standby, yet may be used to isolate one pumping unit for servicing or removal with the other pump still running.
            e) Pump shall be rated for 150 psig (1034 kPa) working pressure.
            f) The pump case shall have gage tappings at the suction and discharge nozzles and include drain ports.
            g) Dual pumps shall allow for the servicing of one pump without draining the chilled water loop.
            h) Motors shall be premium efficiency, Totally Enclosed Fan Cooled (TEFC) 3-phase type with grease lubricated ball bearings.
            i) Each pump shall be factory tested per Hydraulic Institute Standards.
         4) Pressure/temperature taps (3) shall be factory installed to measure the pressure differential across the pump and across the strainer.
         5) Combination valve (which includes check, isolation, and modulation) shall be factory installed. Pressure/temperature taps (2) shall be factory installed to measure the pressure differential across the combination valve.
         6) Hydronic assembly shall have factory-supplied electric freeze protection to –20 F (–29 C).
         7) Piping shall be Schedule 40 black steel.
         8) Cast iron or ductile iron body strainer with 8 mesh screen. A factory-installed, removable fine mesh clean-out strainer for initial run period shall be included.

b. With VFD (these comments are applicable in addition to the comments in section a when the VFD hydronic package is employed [30XA090-160 units only]):

1) The drive shall be of the voltage vector control - pulse with modulation (VVC-PWM) type, providing near unity displacement power factor without the need for external power factor correction capcitors at all loads and speeds.
2) The drive and motor protection shall include; motor phase to ground fault, loss of supply phase, over voltage, under voltage, motor over temperature, inverter overload, over current. Over current is not allowed, ensuring hydronic units will not overload the motor at any point in the operating range of the unit.
3) Sensorless control software shall be available in the hydronic unit to provide automatic speed control without the need for pump mounted (internal/external) or remotely mounted differential pressure system feedback sensors. Control mode setting and minimum/maximum head setpoints shall be set at the factory and be user adjustable via the programming interface.
4) The integrated control shall incorporate an integrated graphical user interface that shall provide running and diagnostic information and identify faults and status in clear English language. Faults shall be logged/recorded for review at a later date. It shall be possible to upload parameters from one drive into the non-volatile memory of a computer and download the parameters into other drives requiring the same settings. The key pad shall incorporate Hand-Off-Auto pushbuttons to enable switching between BMS and manual control. The drive shall incorporate a USB port for direct connection to a PC and an RS485 connection with Modbus RTU protocol. Optional protocols available should include BACnet and Lonworks.
5) The control shall have the following additional features: Sensorless override for BMS, manual pump control or closed loop PID control; programmable skip frequencies and adjustable switching frequency for noise/vibration control; auto alarm reset; motor pre-heat function; six programmable digital inputs; two analog inputs; one programmable analog/digital output; two volt-free contacts.
6) The hydronic unit shall be capable of operating in any of the following control modes:
   a) Duty pump and standby pumps with Sensorless control.
   b) Duty pump and standby pumps with remote sensor or building system (BAS) control.

M. Special Features:

Certain standard features are not applicable when the features designated by * are specified. For assistance in amending the specifications, contact your Carrier representative.

1. DX Cooler Option:
   a. Shell-and-tube type, direct expansion.
   b. Tubes shall be internally enhanced seamless-copper type rolled into tube sheets.
   c. Shall be equipped with Victaulic-type water connections.
   d. Shell shall be insulated with 3/4-in. (19 mm) PVC foam (closed-cell) with a maximum K factor of 0.28.
   e. Design shall incorporate a minimum of 2 independent direct-expansion refrigerant circuits.
   f. Cooler shall be rested and stamped in accordance with ASME Code for a refrigerant working side pressure of 220 psig (1517 kPa). Cooler shall have a maximum water-side pressure of 300 psig (2068 kPa).
   g. Cooler shall be provided with a factory-installed flow switch.

* 2. Low Ambient Temperature Head Pressure Control:

   Unit shall be capable of running at outdoor ambient temperatures down to –20 F (–29 C) with the addition of antifreeze in the cooler circuit, wind baffles, and field-installed or factory-installed solid-state low ambient temperature head pressure control with condenser coil temperature sensor.

3. Unit-Mounted Non-Fused Disconnect:

   Unit shall be supplied with factory-installed, lockable, non-fused electrical disconnect for main power supply.

4. Optional Condenser Coil Materials:
   a. E-coated microchannel coils:

      E-coated aluminum microchannel coil shall have a flexible epoxy polymer coating uniformly applied to all coil external surface areas without material bridging between fins or louvers. Coating process shall ensure complete coil encapsulation, including all exposed fin edges. E-coat shall have a thickness of 0.8 to 1.2 mil with top coat having a uniform dry film thickness from 1.0 to 2.0

mil on all external coil surface areas including fin edges. E-coated coils shall have superior hardness characteristics of 2H per ASTM D3363-00 and cross hatch adhesion of 4B-5B per ASTM D3359-02. Impact resistance shall be up to 160 in./lb (ASTM D2794-93). E-coated coil shall have superior impact resistance with no cracking, chipping, or peeling per NSF/ANSI 51-2002 Method 10.2.

b. Aluminum fin/copper-tube coils:

Coil shall be constructed of seamless copper tubes mechanically bonded to aluminum fins. fins shall have wavy enhancements. These condenser coils are recommended with remote cooler applications. These coils are not recommended for corrosive environments.

c. Pre-coated aluminum-fin coils:

Shall have a durable epoxy-phenolic coating to provide protection in mildly corrosive coastal environments. Coating shall be applied to the aluminum fin stock prior to the fin stamping process to create an inert barrier between the aluminum fin and copper tube. Epoxy-phenolic barrier shall minimize galvanic action between dissimilar metals.

d. Copper-fin coils:

Shall be constructed of copper fins mechanically bonded to copper tubes and copper tube sheets. Galvanized steel tube sheets shall not be acceptable. A polymer strip shall prevent coil assembly from contacting sheet metal coil pan to minimize potential for galvanic corrosion between the coil and pan. All copper construction shall provide protection in moderate coastal applications.

e. E-coated aluminum-fin coils:

Shall have a flexible epoxy polymer coating uniformly applied to all coil surface areas without material bridging between fins. Coating process shall ensure complete coil encapsulation. Color shall be high gloss black with gloss — 60° of 65-90% per ASTM D523-89. Uniform dry film thickness from 0.8 to 1.2 mil on all surface areas including fin edges. Superior hardness characteristics of 2H per ASTM D3363-92A and cross hatch adhesion of 4B-5B per ASTM D3359-93. Impact resistance shall be up to 160 in./lb (ASTM D2794-93). Humidity and water immersion resistance shall be up to minimum 1000 and 250 hours respectively (ASTM D2247-92 and ASTM D870-92). Corrosion durability shall be confirmed through testing to no less than 3000 hours salt spray per ASTM B117-90. Coil construction shall be aluminum fins mechanically bonded to copper tubes.

f. E-coated copper-fin coils:

Shall have a flexible epoxy polymer coating uniformly applied to all coil surface areas without material bridging between fins. Coating process shall ensure complete coil encapsulation. Color shall be high gloss black with gloss — 60° of 65-90% per ASTM D523-89. Uniform dry film thickness from 0.8 to 1.2 mil on all surface areas including fin edges. Superior hardness characteristics of 2H per ASTM D3363-92A and cross hatch adhesion of 4B-5B per ASTM D3359-93. Impact resistance shall be up to 160 in./lb (ASTM D2794-93). Humidity and water immersion resistance shall be up to minimum 1000 and 250 hours respectively (ASTM D2247-92 and ASTM D870-92). Corrosion durability shall be confirmed through testing to no less than 3000 hours salt spray per ASTM B117-90. Coil construction shall be copper-fins mechanically bonded to copper tube sheets. Galvanized steel tube sheets shall not be acceptable. A polymer strip shall prevent coil assembly from contacting sheet metal coil pan to maintain coating integrity and minimize corrosion potential between the coil and pan.

5. Remote Enhanced Display:

Unit shall be supplied with indoor-mounted, remote, 40-character per line, 16-line display panel for field installation.

6. Medium Temperature Brine (080-350 only):

Unit shall be provided with required options to start and operate at leaving chilled fluid temperatures below 30 F (–1.1 C).

7. Energy Management Module:

A factory or field-installed module shall provide the following energy management capabilities: 4 to 20 mA signals for leaving fluid temperature reset, cooling set point reset or demand limit control; 2-step demand limit control (from 0% to 100%) activated by a remote contact closure; and discrete input for “Ice Done” indication for ice storage system interface.

8. Condenser Coil Trim Panels:

Unit shall be supplied with field-installed coil covers.

9. BACnet Communication Option:

Shall provide factory installed communication capability with a BACnet MS/TP network. Allows integration with i-Vu® Open control system or a BACnet building automation system.

10. BACnet Translator Control:

Unit shall be supplied with factory or field-installed interface between the chiller and a BACnet Local Area Network (LAN, i.e., MS/TP EIA-485). Field programming shall be required.

11. LON Translator Control:

    Unit shall be supplied with factory or field-installed interface between the chiller and a Local Operating Network (LON, i.e., LonWorks FT-10A ANSI/EIA-709.1). Field programming shall be required.

12. Navigator™ hand held portable display:
    a. Portable hand held display module with a minimum of 4 lines and 20 characters per line, or clear English, Spanish, Portuguese or French language.
    b. Display menus shall provide clear language descriptions of all menu items, operating modes, configuration points and alarm diagnostics. Reference to factory codes shall not be accepted.
    c. RJ-14 connection plug shall allow display module to be connected to factory-installed receptacle.
    d. Industrial grade coiled extension cord shall allow the display module to be moved around the chiller.
    e. Magnets shall hold the display module to any sheet metal panel to allow hands-free operation.
    f. Display module shall have NEMA 4x housing suitable for use in outdoor environments.
    g. Display shall have back light and contrast adjustment for easy viewing in bright sunlight or night conditions.
    h. Raised surface buttons with positive tactile response.

13. Touch Pilot™ display:

    Unit shall be supplied with a field-installed, remote-mount, touch screen display for network attachment to the chiller.

14. Isolation Valve Option:

    This factory option provides additional refrigerant isolation capability. On units equipped with the standard, flooded cooler, a liquid line service valve and a discharge isolation valve are always provided per refrigerant circuit. On units equipped with the optional DX (direct expansion) cooler, only the liquid line service valve is provided. Regardless of which cooler option is employed, the selection of the isolation valve option results in chillers which are equipped with a liquid line service valve, a discharge service valve, and a series of valves on or near the cooler, the net effect of which is to provide isolation capability in the condenser area, the cooler area and the compressor area. The selection of this option is the only means of acquiring isolation of the compressor from the cooler vessel, and this may be beneficial for servicing the chiller.

    NOTE: The only situation in which the isolation of the condenser area allows the full charge to be stored in the condenser is when round tube plate fin (RTPF) coils are employed.

15. Suction Line Insulation:

    Insulation is tubular closed-cell insulation. This option is required with the medium temperature brine option and recommended for areas of high dewpoints where condensation may be a concern.

16. Service Option:

    The service option provides a remote service port for Navigator™ connection and a factory-installed convenience outlet that includes 4-amp GFI (ground fault interrupt) receptacle with independent fuse protection. Convenience outlet is 115-v female receptacle. Service option not available with 380 v.

17. Remote Service Port:

    Shall be a field-installed receptacle for Navigator device connection.

18. Wye-Delta Starter:

    Unit shall have a factory-installed, wye-delta start to minimize electrical inrush current.

19. Control Transformer:

    Unit shall be supplied with a factory-installed transformer that will allow supply control circuit power from the main unit power supply.

20. GFI Convenience Outlet:

    Shall be factory or field-installed and mounted with easily accessible 115-v female receptacle. Shall include 4 amp GFI receptacle.

21. Plus-One-Pass Cooler (Flooded Coolers Only):

    Unit shall be equipped with plus-one-pass cooler heads to be used with low temperature brine options or high delta T application.

22. Minus-One-Pass Cooler (Flooded Coolers Only):

    Unit shall be equipped with minus-one-pass cooler heads with reduced water-side pressure drop for series flow dual chiller control or high chilled water flow applications.

23. High Ambient Temperature:

    Unit shall be equipped with high speed condenser fan motors to improve performance at high ambient temperatures. This option shall be required for 30XA400-500 chillers which are operating in multi-chiller configurations or have ambient temperatures at or above 100 F (37.8 C).

24. Security Grilles:

    Unit shall be provided with factory (or field) installed painted grilles to protect the condenser, cooler and compressor.

Guide specifications (cont)

25. Upper Hail Guard:

    Unit shall be equipped with a factory-installed option consisting of louvered panels on the ends of the machine which firmly fasten to the machine frame. These panels shall cover the unit from the top to the bottom of the coils, thus providing protection of the coils from hail damage.

26. Full Hail Guard:

    Unit shall be equipped with field-installed accessory consisting of hinged, louvered panels, which cover both ends of the unit. This accessory provides complete protection from hail.

27. Full End Screen:

    Unit shall be equipped with a factory-installed option consisting of louvered panels that cover the machine ends from top to bottom and firmly fasten to the machine frame. These end screens function as a privacy screen and also provide hail protection.

28. Low Sound Package:

    Unit shall be provided with sound attenuation package to include sheet metal enclosures with sound absorbing panels for each compressor.

29. Remote Cooler Kit:

    Allows remote installation of the cooler.

30. Minimum Load Control:

    Unit shall be equipped with microprocessor-controlled minimum load control that shall permit unit operation below the minimum standard operation (varies by unit size).

31. External Pump Control:

    This field-installed accessory shall be required to provide control of dual, external pumps. This accessory shall not be required for single, external pumps or factory-installed pumps.

32. Dual Chiller Accessory Kit:

    For dual chiller applications, unit shall be provided with the additional hardware (thermistors, wells, connectors) required for proper system operation.

Manufacturer reserves the right to discontinue, or change at any time, specifications or designs without notice and without incurring obligations.