Product Data

AQUASNAP® 30RB060-390 Air-Cooled Chillers

60 to 390 Nominal Tons
(210 to 1370 kW)

AQUASNAP®

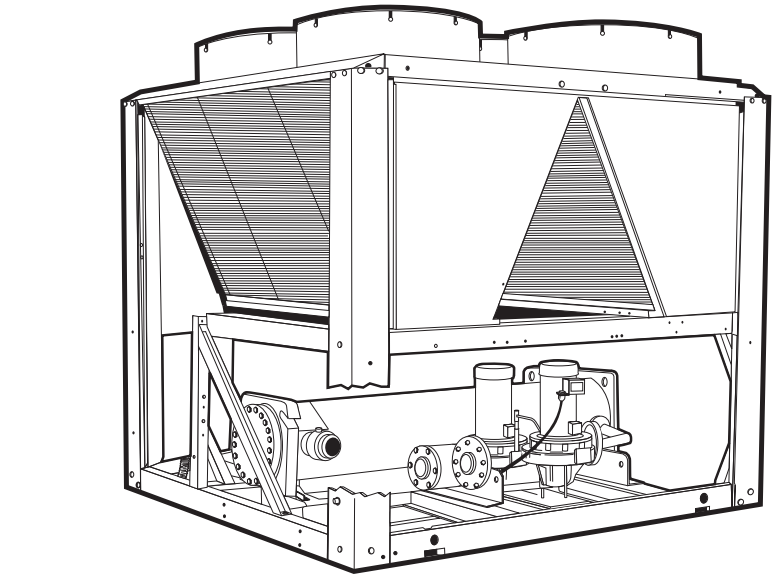

Puron®
the environmentally sound refrigerant

ASHRAE 90.1 COMPLIANT

SEISMICOMPLIANT*

* Meets IBC 2006, ASCE-7-05, CBC 2007, and OSHPD seismic requirements.

The AquaSnap chiller is an effective all-in-one package that is easy to install and easy to own. AquaSnap chillers cost less to purchase and install, and then operate quietly and efficiently. Value-added features include:

- Rotary scroll compression
- Puron® HFC refrigerant (R-410A)
- Quiet AeroAcoustic™ fan system
- Easy to use *Comfort*Link™ controls
- Optional full heat reclaim package
- Optional integrated hydronic pump package, available with variable frequency drive (VFD)
- Novation® heat exchanger technology with microchannel coil

Features/Benefits

Carrier's superior chiller design provides savings at initial purchase, at installation, and for years afterward.

Costs less right from the start

Carrier's AquaSnap chillers feature a compact, all-in-one package design that installs quickly and easily on the ground or the rooftop. The optional pump and hydronic components are already built in; this costs less than buying and installing the components individually. The chiller's fully integrated and pre-assembled hydronic system installs in minutes. No other chiller in this class installs so easily and inexpensively. The preassembled and integrated hydronic module (available with VFD) utilizes top-quality components and pumps to ensure years of reliable operation. The AquaSnap unit's high efficiency keeps operating costs down.

Copyright 2011 Carrier Corporation

Features/Benefits (cont)

AquaSnap® chillers make noise in the marketplace, not the workplace

The AquaSnap chiller's AeroAcoustic™ fan is almost twice as quiet as the competition's per cfm. Much of the noise reduction is in frequencies where noise is most annoying, which makes AquaSnap chillers ideal for sound-sensitive environments. When lower ambient temperatures allow part load operation or during scheduled nighttime operation, the units operate with fewer fans and become even quieter. AquaSnap chillers are quiet during the day and even quieter at night.

The savings will continue to mount

Besides costing less to buy and install, AquaSnap chillers are also more affordable to operate. Carrier's Aqua Series chillers are our most efficient air-cooled models. The AquaSnap chiller provides full-load EER (Energy Efficiency Ratio) up to 9.7 and IPLV (integrated part load value) up to 14.2. AquaSnap chillers use ultra-quiet, high-efficiency rotary scroll compressors, operated in tandem, trios or quads per independent circuit for greater efficiency at partial loads.

Electronic expansion valve (EXV) allows for precise control through all operating ranges, resulting in higher efficiencies.

Proven reliability that is built in

Thousands of AquaSnap chillers are already in service around the world. This field-proven design is backed by a 12-month warranty that includes the optional hydronic system (U.S. and Canada only). The compressors are maintenance-free and protected by an auto-adaptive control that minimizes compressor wear. Year-round operation is standard, from –20 F (–29 C) (with optional cooler heater and low ambient control) to 125 F (52 C).

Rotary scroll compressors provide smooth, quiet and reliable operation.

Multiple independent circuits are standard on all AquaSnap chillers for redundancy and greater reliability.

All-in-one package

AquaSnap chillers provide the most comprehensive chilled water circuit available for any air-cooled chiller. Included is a shell-in-tube direct expansion cooler that may be remote-mounted. The cooler is also completely drainable with factory-installed vents and drains.

Electronic thermal-dispersion flow switch is included with the cooler. The switch is factory installed and tested and contains no moving parts for high reliability.

Optional integrated hydronics package is more than just a pump, it is an entire chilled water system, including:

- Single/dual pumps up to 15 hp and 140 ft head
- Available at constant speed or VFD configuration
- Regular strainer
- Cleanout strainer
- Flow regulator
- Freeze protection to –20 F (with freeze protection option)
- Heaters
- Required piping
- Pressure/temperature taps
- Isolation check valves for dual pump systems

The factory-installed and tested hydronics package provides faster, simpler and less expensive installation.

Environmentally sound

Carrier's Puron® refrigerant (R-410A) enables you to make a responsible decision in the protection of the earth's ozone layer. Puron refrigerant is an HFC refrigerant that does not contain chlorine that is damaging to the ozone layer. Puron refrigerant is unaffected by the Montreal Protocol. Puron refrigerant is a safe, non-toxic, efficient and environmentally sound refrigerant for the future.

Structurally sound

The base rail is industrial-quality 7 ga (sizes 060-080 with RTFP [round tube, plate fin] coils and all chillers with MCHX [microchannel] coils) or 1/4-in. (sizes 090-390 with RTFP coils) cold-rolled steel for maximum structural integrity. The zinc-dipped galvanized frame (with SermaGuard™ coated screws) provides the best protection on the market for corrosion resistance. With such a structurally sound base, no perimeter base rail is needed.

*Comfort*Link™ controls speak your language

The *Comfort*Link controls communicate in plain English, making it as easy as possible to monitor and control each AquaSnap chiller while accurately maintaining fluid temperatures. The large scrolling marquee display acts as a window into the unit's operation, providing easy-to-read information about chiller performance and over 15 diagnostic functions. Carrier 30 Series chillers' *Comfort*Link controls provide features such as chilled water temperature reset, demand limiting, compressor wear minimization and protection, temperature and pressure displays and diagnostic functions. These controls result in higher chiller reliability, simplified training and more productive service calls with correspondingly lower operational and maintenance costs.

Carrier's exclusive handheld Navigator™ display provides convenience and powerful information in the palm of your hand. The Navigator display helps technicians to quickly diagnose problems and even prevent them from occurring.

All AquaSnap units are ready to be used with the Carrier Comfort Network® (CCN) system.

A BACnet* communication option is also available for the i-Vu® Open control system or a BACnet building automation system.

Novation® heat exchanger technology

The Novation heat exchanger design with microchannel (MCHX) condenser coil is a robust, cost effective alternative to traditional coil design. These coils are offered coated or uncoated to match coil protection to site conditions. The Carrier Electronic Catalog (E-Cat) can be used to determine whether or not corrosion protection is recommended for particular applications in coastal/marine environments. Following the input of the requested data, the E-Cat program output will advise the appropriate coil to be used. Other factors described in "Selection Guide: Environmental Corrosion Protection, Novation Heat Exchanger with Microchannel Coil Technology" catalog number 04-581042-01 must also be considered to determine if corrosion protection is required.

Microchannel coils are sturdier than other coil types, making them easier to clean without causing damage to the coil.

*Sponsored by ASHRAE (American Society of Heating, Refrigerating, and Air Conditioning Engineers).

Due to the compact all aluminum design, microchannel coils will reduce overall unit operating weight by 6 to 7%. The streamlined MCHX coil design reduces refrigerant charge by up to 30%.

The coil is designed with rubber isolation around the powder painted coil frame to eliminate galvanic couples which can cause corrosion due to dissimilar metals.

Optional integrated heat reclaim package

For applications with a simultaneous requirement for chilled water and tempered heat water, the heat reclaim option is an ideal solution.

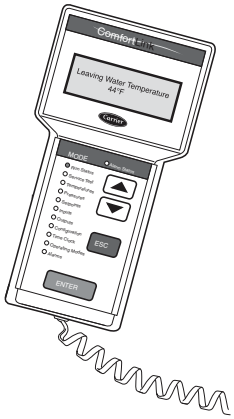

NAVIGATOR™ DISPLAY

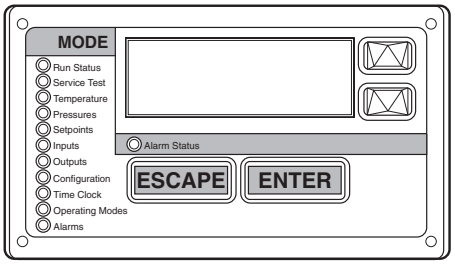

SCROLLING MARQUEE DISPLAY

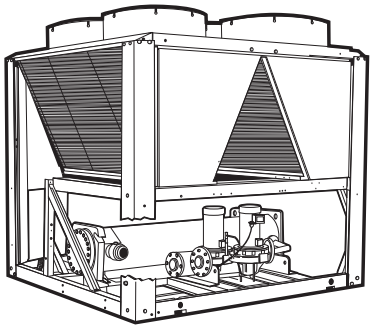

OPTIONAL HYDRONIC PACKAGE

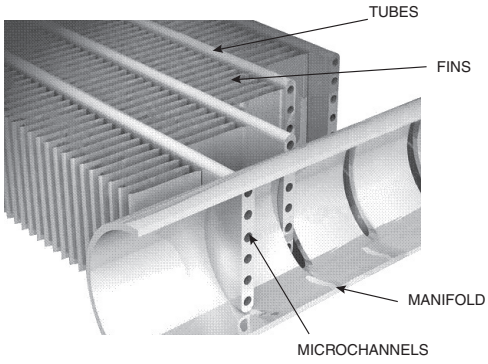

NOVATION® HEAT EXCHANGER TECHNOLOGY WITH MICROCHANNEL CONDENSER COILS

Table of contents

	Page
Features/Benefits	1-3
Model Number Nomenclature	4,5
AHRI Capacity Ratings	5
Physical Data	6-15
Options and Accessories	16-18
Dimensions	19-37
Selection Procedure	38-50
Performance Data	51-55
Typical Piping and Wiring	56-60
Electrical Data	61-69
Controls	70-72
Typical Control Wiring Schematic	73,74
Application Data	75-82
Guide Specifications	83-89

Model number nomenclature

30RB A 190 6 – 8 0 – – – L

30RB – Air-Cooled AquaSnap® Chiller

Design Series

Nominal Sizes

060	110	170	275	360*
070	120	190	300	390*
080	130	210	315*	
090	150	225	330*	
100	160	250	345*	

Voltage

1 – 575-3-60 **5** – 208/230-3-60
2 – 380-3-60 **6** – 460-3-60

Condenser Coil / Low Sound Options

– – Aluminum Fin / Copper Tube
0 – Copper Fin / Copper Tube
1 – Aluminum Pre-Coat Fin / Copper Tube
2 – Aluminum E-Coat Fin / Copper Tube
3 – Copper E-Coat Fin / Copper Tube
4 – Microchannel (MCHX)
5 – E-Coat, Microchannel (MCHX)
6 – Aluminum Fin / Copper Tube, Cmpr Enclosures
7 – Copper Fin / Copper Tube, Cmpr Enclosures
8 – Aluminum Pre-Coat Fin / Copper Tube, Cmpr Enclosures
9 – Aluminum E-Coat Fin / Copper Tube, Cmpr Enclosures
B – Copper E-Coat Fin / Copper Tube, Cmpr Enclosures
C – Microchannel (MCHX), Cmpr Enclosures
D – E-Coat, Microchannel, Cmpr Enclosures

Hydronics Option

– – No Pump Installed
0 – Single Pump, 3 HP
1 – Single Pump, 5 HP
2 – Single Pump, 7.5 HP
3 – Single Pump, 10 HP
4 – Single Pump, 15 HP
6 – Dual Pump, 3 HP
7 – Dual Pump, 5 HP
8 – Dual Pump, 7.5 HP, Low Head
9 – Dual Pump, 7.5 HP, High Head
B – Dual Pump, 10 HP
C – Dual Pump,15 HP
F – Single Pump, 3 HP with VFD
G – Single Pump, 5 HP with VFD
H – Single Pump, 7.5 HP with VFD
J – Single Pump, 10 HP with VFD
K – Single Pump, 15 HP with VFD
M – Dual Pump, 3 HP with VFD
N – Dual Pump, 5 HP with VFD
P – Dual Pump, 7.5 HP, Low Head with VFD
T – Dual Pump, 7.5 HP, High Head with VFD
Q – Dual Pump, 10 HP with VFD
R – Dual Pump, 15 HP with VFD
Z – Special order designation

Cooler / Brine Options

- – Integral Cooler, CRN (Canada)
0 – Integral Cooler, Cooler Heater, CRN (Canada)
4 – Integral Cooler, Microchannel (MCHX), CRN (Canada)
5 – Integral Cooler, Cooler Heater, Microchannel (MCHX), CRN (Canada)
9 – Integral Cooler, Med. Temperature Brine, CRN (Canada)
B – Integral Cooler, Cooler Heater, Med. Temperature Brine, CRN (Canada)
D – Integral Cooler, Med. Temperature Brine, Microchannel (MCHX), CRN (Canada)
F – Integral Cooler, Cooler Heater, Med. Temperature Brine, Microchannel (MCHX), CRN (Canada)
G – Integral Cooler, no CRN
H – Integral Cooler, Cooler Heater, no CRN
K – Integral Cooler, Microchannel (MCHX), no CRN
L – Integral Cooler, Cooler Heater, Microchannel (MCHX), no CRN
M – Integral Cooler, Med. Temperature Brine, no CRN
N – Integral Cooler, Cooler Heater, Med. Temperature Brine, no CRN
P – Integral Cooler, Med. Temperature Brine, Microchannel (MCHX), no CRN
Q – Integral Cooler, Cooler Heater, Med. Temperature Brine, Microchannel (MCHX), no CRN
R – Integral Cooler, Microchannel (MCHX), Heat Recovery, no CRN
S – Integral Cooler, Cooler Heater, Microchannel (MCHX), Heat Recovery, no CRN
T – Integral Cooler, Microchannel (MCHX), Heat Recovery, CRN (Canada)
V – Integral Cooler, Cooler Heater, Microchannel (MCHX), Heat Recovery, CRN (Canada)

Refrigeration Circuit Option

– – No Suction Line Insulation
0 – Suction Insulation
1 – Suction Service Valves
2 – Low Ambient Head Pressure Control Operation
3 – Suction Insulation, Suction Service Valves
4 – Suction Insulation, Low Ambient Head Pressure Control Operation
5 – Suction Service Valves, Low Ambient Head Pressure Control Operation
6 – Suction Insulation, Service Valves, Low Ambient Head Pressure Control Operation
7 – Minimum Load Control
8 – Suction Insulation, Minimum Load Control Operation
9 – Suction Service Valves, Minimum Load Control Operation
B – Low Ambient Operation, Minimum Load Control Operation
C – Suction Insulation, Suction Service Valves, Minimum Load Control Operation
D – Suction Insulation, Low Ambient Head Pressure Control Operation , Minimum Load Control Operation
F – Suction Service Valves, Low Ambient Head Pressure Control Operation, Minimum Load Control Operation
G – Suction Insulation, Suction Service Valves, Low Ambient Head Pressure Control Operation, Minimum Load Control Operation

Electrical Option

– – Single Power Connection, Terminal Block, XL
0 – Single Power Connection, Terminal Block, XL, Full End Covers
3 – Dual Power Connection, Terminal Block, XL
4 – Dual Power Connection, Terminal Block, XL, Full End Covers
7 – Single Power Connection, Non-Fused Disconnect, XL
8 – Single Power Connection, Non-Fused Disconnect, XL, Full End Covers
C – Dual Power Connection, Non-Fused Disconnect, XL
D – Dual Power Connection, Non-Fused Disconnect, XL, Full End Covers

Controls/Communication Option

– – None
0 – EMM
1 – Remote Service Port, GFI-CO
2 – EMM, Remote Service Port, GFI-CO
3 – BACnet† Communication
4 – BACnet Communication, EMM
5 – BACnet Communication, Remote Service Port, GFI-CO
6 – BACnet Communication, EMM, Remote Service Port, GFI-CO
7 – BACnet Translator
8 – BACnet Translator, EMM
9 – BACnet Translator, Remote Service Port, GFI-CO
B – BACnet Translator, EMM, Remote Service Port, GFI-CO
H – LON Translator
J – LON Translator, EMM
K – LON Translator, Remote Service Port, GFI-CO
L – LON Translator, EMM, Remote Service Port, GFI-CO

Security/Packaging Option

L – No Packaging
0 – Skid
1 – Skid, Top Crate and Bag
3 – Condenser Coil Trim Panels
4 – Skid, Condenser Coil Trim Panels
5 – Skid, Top Crate and Bag, Condenser Coil Trim Panels
7 – Condenser Coil Trim Panels, Upper and Lower Grilles
8 – Skid, Condenser Coil Trim Panels, Upper and Lower Grilles
9 – Skid, Top Crate and Bag, Condenser Coil Trim Panels, Upper and Lower Grilles
C – Condenser Coil Trim Panels, Upper and Lower Grilles, Upper Hail Guards
D – Skid, Condenser Coil Trim Panels, Upper and Lower Grilles, Upper Hail Guards
F – Skid, Top Crate and Bag, Condenser Coil Trim Panels, Upper and Lower Grilles, Upper Hail Guards
H – Skid, High SCCR
J – Skid, Top Crate, Bag, High SCCR
K – High SCCR
M – Coil Trim Panels, High SCCR
N – Skid, Coil Trim Panels, High SCCR
P – Skid, Top Crate, Bag, Coil Trim Panels, High SCCR
R – Coil Trim Panels, Upper and Lower Grilles, High SCCR
S – Skid, Coil Trim Panels, Upper and Lower Grilles, High SCCR
T – Skid, Top Crate, Bag, Coil Trim Panels, Upper and Lower Grilles, High SCCR
W – Coil Trim Panels, Upper and Lower Grilles, Upper Hail Guards, High SCCR
X – Skid, Coil Trim Panels, Upper and Lower Grilles, Upper Hail Guards, High SCCR
Y – Skid, Top Crate, Bag, Coil Trim Panels, Upper and Lower Grilles, Upper Hail Guards, High SCCR

LEGEND

CRN	—	Canadian Registration Number
EMM	—	Energy Management Module
GFI-CO	—	Ground Fault Interrupting Convenience Outlet
LON	—	Local Operating Network
SCCR	—	Short Circuit Current Rating
VFD	—	Variable Frequency Device
XL	—	Across-the-Line Start

Quality Assurance
Certified to ISO 9001

*Refer to unit sizes and modular combinations on page 3.
†Sponsored by ASHRAE (American Society of Heating, Refrigerating, and Air Conditioning Engineers).

NOTE: A "Z" in position 11 indicates a special order machine. Digits following do not correspond to tables.

Model number nomenclature (cont)

UNIT SIZES AND MODULAR COMBINATIONS

UNIT 30RB	NOMINAL TONS	NOMINAL kW	MODULE A	MODULE B
060	60	210	—	—
070	70	245	—	—
080	80	280	—	—
090	90	315	—	—
100	100	350	—	—
110	110	385	—	—
120	120	421	—	—
130	130	456	—	—
150	150	526	—	—
160	160	562	—	—
170	170	597	—	—

UNIT 30RB	NOMINAL TONS	NOMINAL kW	MODULE A	MODULE B
190	190	667	—	—
210	210	737	—	—
225	225	791	—	—
250	250	879	—	—
275	275	967	—	—
300	300	1055	—	—
315	315	1107	160	160
330	330	1160	170	160
345	345	1213	170	170
360	360	1266	190	170
390	390	1370	190	190

AHRI* capacity ratings

30RB UNIT SIZE	CAPACITY		COMP	FAN	TOTAL POWER	FULL LOAD		IPLV		COOLER FLOW RATE		COOLER PD	
	Tons	kW	kW	kW	kW	EER	COP	EER	COP	GPM	L/s	ft wg	kPa
060	57.1	200.8	60.1	10.3	70.4	9.7	2.9	13.1	3.9	136.5	8.6	8.9	26.6
070	66.5	233.9	73.1	10.3	83.4	9.6	2.8	13.4	3.9	159.0	10.0	11.7	35.0
080	76.0	267.3	85.0	10.3	95.3	9.6	2.8	14.2	4.2	181.7	11.5	7.0	20.9
090	86.4	303.8	91.1	15.5	106.6	9.7	2.9	13.4	3.9	206.7	13.0	8.9	26.6
100	95.7	336.5	104.0	15.5	119.5	9.6	2.8	13.6	4.0	229.0	14.4	10.7	32.0
110	105.5	371.0	116.6	15.5	132.1	9.6	2.8	13.7	4.0	252.1	15.9	8.8	26.3
120	118.4	416.4	129.5	18.1	147.6	9.6	2.8	13.7	4.0	283.2	17.9	10.9	32.6
130	127.3	447.7	137.5	20.6	158.1	9.7	2.8	13.6	4.0	304.4	19.2	12.5	37.4
150	144.4	507.8	158.4	20.6	179.0	9.7	2.8	13.8	4.0	345.3	21.8	7.5	22.4
160	153.0	538.0	162.8	25.8	188.6	9.7	2.9	13.4	3.9	366.0	23.1	8.4	25.1
170	166.4	585.5	182.4	25.8	208.2	9.6	2.8	13.5	4.0	398.1	25.1	9.8	29.3
190	188.5	662.9	205.6	31.0	236.6	9.6	2.8	13.4	3.9	450.9	28.4	12.4	37.1
210	201.9	710.0	217.6	31.0	248.6	9.7	2.9	13.7	4.0	482.7	30.5	9.9	29.6
225	214.2	753.3	236.8	31.0	267.8	9.6	2.8	13.8	4.0	512.3	32.3	11.2	33.5
250	237.8	836.2	261.5	36.1	297.6	9.6	2.8	13.6	4.0	568.8	35.9	13.6	40.7
275	260.2	915.0	284.0	41.3	325.3	9.6	2.8	13.7	4.0	622.4	39.3	16.2	48.4
300	282.6	993.8	308.1	46.5	354.6	9.6	2.8	13.5	4.0	675.6	42.6	19.0	56.8
315	306.0	1076.1	325.7	51.6	377.3	9.7	2.9	13.4	3.9	731.9	46.2	8.4	25.1
330	319.4	1123.6	345.2	51.6	396.8	9.6	2.8	13.5	4.0	764.1	48.2	9.8	29.3
345	332.9	1170.7	364.8	51.6	416.4	9.6	2.8	13.5	4.0	796.3	50.2	9.8	29.3
360	355.0	1248.4	388.0	56.8	444.8	9.6	2.8	13.5	4.0	849.0	53.6	12.4	37.1
390	377.0	1325.8	411.1	62.0	473.1	9.6	2.8	13.4	3.9	901.7	56.9	12.4	37.1

LEGEND

COP — Coefficient of Performance
EER — Energy Efficiency Ratios
IPLV — Integrated Part Load Value
PD — Pressure Drop

*Air Conditioning, Heating, and Refrigeration Institute.

NOTE: Based on AHRI 550/590 standard rating conditions. Ratings are for standard chillers only. Ratings do not include options.

Physical data

30RB060-300 — ENGLISH

UNIT 30RB	060	070	080	090	100	110	120	130	150
OPERATING WEIGHT (lb)*									
Al-Cu Condenser Coil	4,111	4,317	4,600	5,932	6,155	6,519	7,690	8,045	9,174
Cu-Cu Condenser Coil	4,593	4,799	5,082	6,656	6,879	7,243	8,534	9,010	10,139
MCHX Condenser Coil	3,783	3,978	4,267	5,449	5,663	6,027	7,119	7,402	8,517
REFRIGERANT TYPE	R-410A, EXV Controlled System								
Refrigerant Charge (lb)									
Std Coil, Ckt A/Ckt B/Ckt C	89.5/40.5/—	112/40.5/—	68.5/68.5/—	94/76/—	94/96/—	94/106/—	94/133/—	133/106/—	133/133/—
MCHX Coil, Ckt A/Ckt B/Ckt C	40/20/—	40/20/—	33/33/—	40/40/—	40/42/—	40/53/—	43/57/—	54/43/—	56/62/—
COMPRESSORS	Scroll, Hermetic								
Quantity	3	3	4	4	4	5	5	6	6
Speed (rpm)	3500								
(Qty) Compressor Model Number Ckt A	(2) SH240	(2) SH300	(2) SH240	(2) SH300	(2) SH300	(2) SH300	(2) SH300	(3) SH300	(3) SH300
(Qty) Compressor Model Number Ckt B	(1) SH240	(1) SH240	(2) SH240	(2) SH240	(2) SH300	(3) SH240	(3) SH300	(3) SH240	(3) SH300
(Qty) Compressor Model Number Ckt C	N/A	N/A	N/A	N/A	N/A	N/A	N/A	N/A	N/A
Oil Charge (Pt, Ckt A/Ckt B/Ckt C)	26.2/13.1/—	26.2/13.1/—	26.2/26.2/—	26.2/26.2/—	26.2/26.2/—	26.2/39.4/—	26.2/39.4/—	39.4/39.4/—	39.4/39.4/—
No. Capacity Steps									
Standard	3	3	4	4	4	5	5	6	6
Optional (Maximum)	4	4	5	5	5	6	6	7	7
Minimum Capacity Step (%)									
Standard	33	29	25	22	25	18	20	15	17
Optional	22	19	16	14	18	12	14	10	12
Capacity (%)									
Ckt A	67	71	50	56	50	45	40	56	50
Ckt B	33	29	50	44	50	55	60	44	50
Ckt C	N/A	N/A	N/A	N/A	N/A	N/A	N/A	N/A	N/A
COOLER	Direct Expansion, Shell and Tube Type								
Weight (empty, lb)	715	715	856	856	856	970	970	970	1518
Net Fluid Volume (gal)	28.2	28.2	31.3	31.3	31.3	45.8	45.8	45.8	73.5
Maximum Refrigerant Pressure (psig)	445	445	445	445	445	445	445	445	445
Maximum Water-Side Pressure without Pumps (psig)	300	300	300	300	300	300	300	300	300
Maximum Water-Side Pressure with Pumps (psig)	150	150	150	150	150	150	150	150	150
COOLER WATER CONNECTIONS (in.)									
Inlet and Outlet, Victaulic	4	4	4	4	4	6	6	6	6
Drain (NPT)	3/4	3/4	3/4	3/4	3/4	3/4	3/4	3/4	3/4
CONDENSER FANS	Shrouded Axial Type, Vertical Discharge								
Standard Low Noise Type									
Fan Speed (rpm) Standard	1140	1140	1140	1140	1140	1140	1140	1140	1140
No. Blades...Diameter (in.)	9...30	9…30	9…30	9…30	9…30	9…30	9…30	9…30	9…30
No. Fans (Ckt A/Ckt B/Ckt C)	3/1/—	3/1/—	2/2/—	3/3/—	3/3/—	3/3/—	3/4/—	4/4/—	4/4/—
Total Airflow (cfm)	49,600	49,600	49,600	74,400	74,400	74,400	86,800	99,200	99,200
CONDENSER COILS									
No. Coils (Ckt A/Ckt B/Ckt C)	3/1/—	3/1/—	2/2/—	3/3/—	3/3/—	3/3/—	3/4/—	4/4/—	4/4/—
Total Face Area (sq ft)	94	94	94	141	141	141	164	188	188
Max Working Refrigerant Pressure (psig)	656	656	656	656	656	656	656	656	656
OPTIONAL HEAT RECOVERY CONDENSER	Flooded, Shell and Tube Type								
Weight (lb) (empty)	753	753	753	872	872	872	1236	1236	1236
Net Fluid Volume (gal)	8.0	8.0	8.0	10.0	10.0	10.0	15.1	15.1	15.1
Maximum Refrigerant Pressure (psig)	656	656	656	656	656	656	656	656	656
Maximum Water-Side Pressure (psig)	300	300	300	300	300	300	300	300	300
Water Connections (in.)									
Inlet and Outlet, Victaulic	3	3	3	3	3	3	5	5	5
Drain (NPT)	3/8	3/8	3/8	3/8	3/8	3/8	3/8	3/8	3/8
HYDRONIC MODULE (Optional)	Pump(s) with pressure/temperature taps and combination valve.								
Pump	Single or Dual, 1800 or 3600 rpm								
CHASSIS DIMENSIONS (ft-in.)									
Length		7-11			11-10			15-9	
Width					7-4 25/32				
Height					7-6 7/16				

LEGEND

Al-Cu — Aluminum Fin/Copper Tube Condenser Coil
Cu-Cu — Copper Fin/Copper Tube Condenser Coil
EXV — Electronic Expansion Valve
MCHX — Microchannel Condenser Coil
N/A — Not Applicable

*Operating weight does not include any options.

30RB060-300 — ENGLISH (cont)

UNIT 30RB	160	170	190	210	225	250	275	300
OPERATING WEIGHT (lb)*								
Al-Cu Condenser Coil	10,266	10,601	12,013	13,734	14,067	15,468	16,915	18,306
Cu-Cu Condenser Coil	11,472	11,807	13,460	15,181	15,514	17,157	18,845	20,477
MCHX Condenser Coil	9,475	9,799	11,064	12,772	13,093	14,349	15,647	16,893
REFRIGERANT TYPE	R-410A, EXV Controlled System							
Refrigerant Charge (lb)								
Std Coil, Ckt A/Ckt B/Ckt C	162/106/—	162/130/—	162/162/—	133/106/133	133/133/133	133/133/162	162/162/133	162/162/162
MCHX Coil, Ckt A/Ckt B/Ckt C	83/55/—	83/64/—	83/87/—	59/53/64	59/59/64	59/59/89	83/87/68	83/87/94
COMPRESSORS	Scroll, Hermetic							
Quantity	7	7	8	9	9	10	11	12
Speed (rpm)	3500							
(Qty) Compressor Model Number Ckt A	(4) SH300	(4) SH300	(4) SH300	(3) SH300	(3) SH300	(3) SH300	(4) SH300	(4) SH300
(Qty) Compressor Model Number Ckt B	(3) SH240	(3) SH300	(4) SH300	(3) SH240	(3) SH300	(3) SH300	(4) SH300	(4) SH300
(Qty) Compressor Model Number Ckt C	N/A	N/A	N/A	(3) SH300	(3) SH300	(4) SH300	(3) SH300	(4) SH300
Oil Charge (Pt, Ckt A/Ckt B/Ckt C)	52.5/39.4/—	52.5/39.4/—	52.5/52.5/—	39.4/39.4/39.4	39.4/39.4/39.4	39.4/39.4/52.5	52.5/52.5/39.4	52.5/52.5/52.5
No. Capacity Steps								
Standard	7	7	8	9	9	10	11	12
Optional (Maximum)	8	8	9	10	10	11	12	13
Minimum Capacity Step (%)								
Standard	13	14	13	10	11	10	9	8
Optional	8	10	9	6	8	7	7	6
Capacity (%)								
Ckt A	62	57	50	36	33	30	36	33
Ckt B	38	43	50	28	33	30	36	33
Ckt C	N/A	N/A	N/A	36	33	40	28	33
COOLER	Direct Expansion, Shell and Tube Type							
Weight (empty, lb)	1518	1518	1518	2382	2382	2382	2382	2382
Net Fluid Volume (gal)	73.5	73.5	73.5	86.6	86.6	86.6	86.6	86.6
Maximum Refrigerant Pressure (psig)	445	445	445	445	445	445	445	445
Maximum Water-Side Pressure without Pumps (psig)	300	300	300	300	300	300	300	300
Maximum Water-Side Pressure with Pumps (psig)	150	150	150	150	150	150	150	150
COOLER WATER CONNECTIONS (in.)								
Inlet and Outlet, Victaulic	6	6	6	6	6	6	6	6
Drain (NPT)	3/4	3/4	3/4	3/4	3/4	3/4	3/4	3/4
CONDENSER FANS	Shrouded Axial Type, Vertical Discharge							
Standard Low Noise Type								
Fan Speed (rpm) Standard	1140	1140	1140	1140	1140	1140	1140	1140
No. Blades...Diameter (in.)	9…30	9…30	9…30	9…30	9…30	9…30	9…30	9…30
No. Fans (Ckt A/Ckt B/Ckt C)	6/4/—	6/4/—	6/6/—	4/4/4	4/4/4	4/4/6	6/6/4	6/6/6
Total Airflow (cfm)	124,000	124,000	148,800	148,800	148,800	173,600	198,400	223,200
CONDENSER COILS								
No. Coils (Ckt A/Ckt B/Ckt C)	6/4/—	6/4/—	6/6/—	4/4/4	4/4/4	4/4/6	6/6/4	6/6/6
Total Face Area (sq ft)	235	235	282	282	282	328	375	422
Max Working Refrigerant Pressure (psig)	656	656	656	656	656	656	656	656
OPTIONAL HEAT RECOVERY CONDENSER	Flooded, Shell and Tube Type							
Weight (lb) (empty)	1296	1296	1296	—	—	—	—	—
Net Fluid Volume (gal)	17.4	17.4	17.4	—	—	—	—	—
Maximum Refrigerant Pressure (psig)	656	656	656	—	—	—	—	—
Maximum Water-Side Pressure (psig)	300	300	300	—	—	—	—	—
Water Connections (in.)								
Inlet and Outlet, Victaulic	5	5	5	—	—	—	—	—
Drain (NPT)	3/8	3/8	3/8	—	—	—	—	—
HYDRONIC MODULE (Optional)	Pump(s) with pressure/temperature taps and combination valve.							
Pump	Single or Dual, 1800 or 3600 rpm			Not available				
CHASSIS DIMENSIONS (ft-in.)								
Length	19-8			23-7		27-6	31-5	35-4
Width	7-4 25/32							
Height	7-6 7/16							

LEGEND

Al-Cu — Aluminum Fin/Copper Tube Condenser Coil
Cu-Cu — Copper Fin/Copper Tube Condenser Coil
EXV — Electronic Expansion Valve
MCHX — Microchannel Condenser Coil
N/A — Not Applicable

*Operating weight does not include any options.

Physical data (cont)

30RB060-300 — SI

UNIT 30RB	060	070	080	090	100	110	120	130	150
OPERATING WEIGHT (kg)*									
Al-Cu Condenser Coil	1869	1962	2091	2697	2798	2963	3488	3649	4161
Cu-Cu Condenser Coil	2088	2181	2310	3026	3127	3292	3871	4087	4599
MCHX Condenser Coil	1716	1804	1934	2472	2569	2734	3229	3358	3863
REFRIGERANT TYPE	R-410A, EXV Controlled System								
Refrigerant Charge (kg)									
Std Coil, Ckt A/Ckt B/Ckt C	40.6/18.4/—	50.8/18.4/—	31.1/31.1/—	42.6/34.5/—	42.6/43.6/—	42.6/48.1/—	42.6/60.3/—	60.3/48.1/—	60.3/60.3/—
MCHX Coil, Ckt A/Ckt B/Ckt C	18.1/9.1/—	18.1/9.1/—	14.9/14.9/—	18.1/18.1/—	18.1/19.1/—	18.1/24.0/—	19.5/25.9/—	24.5/19.5/—	25.4/28.1/—
COMPRESSORS	Scroll, Hermetic								
Quantity	3	3	4	4	4	5	5	6	6
Speed (r/s)	58.3								
(Qty) Compressor Model Number Ckt A	(2) SH240	(2) SH300	(2) SH240	(2) SH300	(2) SH300	(2) SH300	(2) SH300	(3) SH300	(3) SH300
(Qty) Compressor Model Number Ckt B	(1) SH240	(1) SH240	(2) SH240	(2) SH240	(2) SH300	(3) SH240	(3) SH300	(3) SH240	(3) SH300
(Qty) Compressor Model Number Ckt C	N/A	N/A	N/A	N/A	N/A	N/A	N/A	N/A	N/A
Oil Charge (L, Ckt A/Ckt B/Ckt C)	12.4/6.2/—	12.4/6.2/—	12.4/12.4/—	12.4/12.4/—	12.4/12.4/—	12.4/18.6/—	12.4/18.6/—	18.6/18.6/—	18.6/18.6/—
No. Capacity Steps									
Standard	3	3	4	4	4	5	5	6	6
Optional (Maximum)	4	4	5	5	5	6	6	7	7
Minimum Capacity Step (%)									
Standard	33	29	25	22	25	18	20	15	17
Optional	22	19	16	14	18	12	14	10	12
Capacity (%)									
Ckt A	67	71	50	56	50	45	40	56	50
Ckt B	33	29	50	44	50	55	60	44	50
Ckt C	N/A	N/A	N/A	N/A	N/A	N/A	N/A	N/A	N/A
COOLER	Direct Expansion, Shell and Tube Type								
Weight (empty, kg)	324	324	388	388	388	440	440	440	689
Net Fluid Volume (L)	106	106	118	118	118	173	173	173	278
Maximum Refrigerant Pressure (kPa)	3068	3068	3068	3068	3068	3068	3068	3068	3068
Maximum Water-Side Pressure without Pumps (kPa)	2068	2068	2068	2068	2068	2068	2068	2068	2068
Maximum Water-Side Pressure with Pumps (kPa)	1034	1034	1034	1034	1034	1034	1034	1034	1034
WATER CONNECTIONS (in.)									
Inlet and Outlet, Victaulic	4	4	4	4	4	6	6	6	6
Drain (NPT)	3/4	3/4	3/4	3/4	3/4	3/4	3/4	3/4	3/4
CONDENSER FANS	Shrouded Axial Type, Vertical Discharge								
Standard Low Noise Type									
Fan Speed (r/s) Standard	19	19	19	19	19	19	19	19	19
No. Blades...Diameter (mm)	9…762	9…762	9…762	9…762	9…762	9…762	9…762	9…762	9…762
No. Fans (Ckt A/Ckt B/Ckt C)	3/1/—	3/1/—	2/2/—	3/3/—	3/3/—	3/3/—	3/4/—	4/4/—	4/4/—
Total Airflow (L/s)	23 409	23 409	23 409	35 113	35 113	35 113	40 965	46 817	46 817
CONDENSER COILS									
No. Coils (Ckt A/Ckt B/Ckt C)	3/1/—	3/1/—	2/2/—	3/3/—	3/3/—	3/3/—	3/4/—	4/4/—	4/4/—
Total Face Area (sq m)	8.73	8.73	8.73	13.1	13.1	13.1	15.24	17.47	17.47
Max Working Refrigeration Pressure (kPa)	4522	4522	4522	4522	4522	4522	4522	4522	4522
OPTIONAL HEAT RECOVERY CONDENSER	Flooded, Shell and Tube Type								
Weight (kg) (empty)	342	342	342	396	396	396	562	562	562
Net Fluid Volume (L)	30.3	30.3	30.3	37.9	37.9	37.9	57.2	57.2	57.2
Maximum Refrigerant Pressure (kPa)	4523	4523	4523	4523	4523	4523	4523	4523	4523
Maximum Water-Side Pressure (kPa)	2068	2068	2068	2068	2068	2068	2068	2068	2068
Water Connections (in.)									
Inlet and Outlet, Victaulic	3	3	3	3	3	3	5	5	5
Drain (NPT)	3/8	3/8	3/8	3/8	3/8	3/8	3/8	3/8	3/8
HYDRONIC MODULE (Optional)	Pump(s) with pressure/temperature taps and combination valve.								
Pump	Single or Dual, 29.2 or 58.3 r/s								
CHASSIS DIMENSIONS									
Length (mm)		2412			3606			4800	
Width (mm)					2255				
Height (mm)					2296.9				

LEGEND

Al-Cu — Aluminum Fin/Copper Tube Condenser Coil
Cu-Cu — Copper Fin/Copper Tube Condenser Coil
EXV — Electronic Expansion Valve
MCHX — Microchannel Condenser Coil
N/A — Not Applicable

*Operating weight does not include any options.

30RB060-300 — SI (cont)

UNIT 30RB	160	170	190	210	225	250	275	300
OPERATING WEIGHT (kg)*								
Al-Cu Condenser Coil	4666	4819	5461	6243	6394	7031	7686	8321
Cu-Cu Condenser Coil	5215	5367	6118	6901	7052	7799	8566	9308
MCHX Condenser Coil	4297	4443	5019	5793	5937	6509	7096	7659
REFRIGERANT TYPE	R-410A, EXV Controlled System							
Refrigerant Charge (kg)								
Std Coil, Ckt A/Ckt B/Ckt C	73.5/48.1/—	73.5/59.0/—	73.5/73.5/—	60.3/48.1/60.3	60.3/60.3/60.3	60.3/60.3/73.5	73.5/73.5/60.3	73.5/73.5/73.5
MCHX Coil, Ckt A/Ckt B/Ckt C	37.6/24.9/—	37.6/29.0/—	37.6/39.5/—	28.8/24.0/29.0	26.8/26.8/29.0	26.8/26.8/40.4	37.6/39.5/30.8	37.6/39.5/42.6
COMPRESSORS	Scroll, Hermetic							
Quantity	7	7	8	9	9	10	11	12
Speed (r/s)	58.3							
(Qty) Compressor Model Number Ckt A	(4) SH300	(4) SH300	(4) SH300	(3) SH300	(3) SH300	(3) SH300	(4) SH300	(4) SH300
(Qty) Compressor Model Number Ckt B	(3) SH240	(3) SH300	(4) SH300	(3) SH240	(3) SH300	(3) SH300	(4) SH300	(4) SH300
(Qty) Compressor Model Number Ckt C	N/A	N/A	N/A	(3) SH300	(3) SH300	(4) SH300	(3) SH300	(4) SH300
Oil Charge (L, Ckt A/Ckt B/Ckt C)	24.8/18.6/—	24.8/18.6/—	24.8/24.8/—	18.6/18.6/18.6	18.6/18.6/18.6	18.6/18.6/24.8	24.8/24.8/18.6	24.8/24.8/24.8
No. Capacity Steps								
Standard	7	7	8	9	9	10	11	12
Optional (Maximum)	8	8	9	10	10	11	12	13
Minimum Capacity Step (%)								
Standard	13	14	13	10	11	10	9	8
Optional	8	10	9	6	8	7	7	6
Capacity (%)								
Ckt A	62	57	50	38	33	30	36	33
Ckt B	38	43	50	28	33	30	36	33
Ckt C	N/A	N/A	N/A	36	33	40	28	33
COOLER	Direct Expansion, Shell and Tube Type							
Weight (empty, kg)	689	689	689	1080	1080	1080	1080	1080
Net Fluid Volume (L)	278	278	278	327	327	327	327	327
Maximum Refrigerant Pressure (kPa)	3068	3068	3068	3068	3068	3068	3068	3068
Maximum Water-Side Pressure without Pumps (kPa)	2068	2068	2068	2068	2068	2068	2068	2068
Maximum Water-Side Pressure with Pumps (kPa)	1034	1034	1034	1034	1034	1034	1034	1034
WATER CONNECTIONS (in.)								
Inlet and Outlet, Victaulic	6	6	6	6	6	6	6	6
Drain (NPT)	3/4	3/4	3/4	3/4	3/4	3/4	3/4	3/4
CONDENSER FANS	Shrouded Axial Type, Vertical Discharge							
Standard Low Noise Type								
Fan Speed (r/s) Standard	19	19	19	19	19	19	19	19
No. Blades...Diameter (mm)	9…762	9…762	9…762	9…762	9…762	9…762	9…762	9…762
No. Fans (Ckt A/Ckt B/Ckt C)	6/4/—	6/4/—	6/6/—	4/4/4	4/4/4	4/4/6	6/6/4	6/6/6
Total Airflow (L/s)	58 521	58 521	70 226	70 226	70 226	81 930	93 634	105 339
CONDENSER COILS								
No. Coils (Ckt A/Ckt B/Ckt C)	6/4/—	6/4/—	6/6/—	4/4/4	4/4/4	4/4/6	6/6/4	6/6/6
Total Face Area (sq m)	21.83	21.83	26.2	26.2	26.2	30.47	34.84	39.21
Max Working Refrigeration Pressure (kPa)	4522	4522	4522	4522	4522	4522	4522	4522
OPTIONAL HEAT RECOVERY CONDENSER	Flooded, Shell and Tube Type							
Weight (kg) (empty)	589	589	589	—	—	—	—	—
Net Fluid Volume (L)	65.9	65.9	65.9	—	—	—	—	—
Maximum Refrigerant Pressure (kPa)	4523	4523	4523	—	—	—	—	—
Maximum Water-Side Pressure (kPa)	2068	2068	2068	—	—	—	—	—
Water Connections (in.)								
Inlet and Outlet, Victaulic	5	5	5	—	—	—	—	—
Drain (NPT)	3/8	3/8	3/8	—	—	—	—	—
HYDRONIC MODULE (Optional)	Pump(s) with pressure/temperature taps and combination valve.			Not available				
Pump	Single or Dual, 29.2 or 58.3 r/s							
CHASSIS DIMENSIONS								
Length (mm)	5994	5994	7188	7188	7188	8382	9576	10 770
Width (mm)	2255							
Height (mm)	2296.9							

LEGEND

Al-Cu — Aluminum Fin/Copper Tube Condenser Coil
Cu-Cu — Copper Fin/Copper Tube Condenser Coil
EXV — Electronic Expansion Valve
MCHX — Microchannel Condenser Coil
N/A — Not Applicable

*Operating weight does not include any options.

Physical data (cont)

30RB315-390 — ENGLISH

UNIT 30RB	315	330	345	360	390
OPERATING WEIGHT (Module A/Module B, lb)*					
Al-Cu Condenser Coil	10,266/10,266	10,601/10,266	10,601/10,601	12,013/10,601	12,013/12,013
Cu-Cu Condenser Coil	11,472/11,472	11,807/11,472	11,807/11,807	13,460/11,807	13,460/13,460
MCHX Condenser Coil	9,475/9,475	9,799/9,475	9,799/9,799	11,064/9,799	11,064/11,064
REFRIGERANT TYPE	R-410A, EXV Controlled System				
Circuits Qty	4	4	4	4	4
Refrigerant Charge					
Std Coil, Module A Ckt A/Ckt B (lb)	162/106	162/130	162/130	162/162	162/162
Std Coil, Module B Ckt A/Ckt B (lb)	162/106	162/106	162/130	162/130	162/162
MCHX Coil, Module A Ckt A/Ckt B (lb)	83/55	83/64	83/64	83/87	83/87
MCHX Coil, Module B Ckt A/Ckt B (lb)	83/55	83/55	83/64	83/64	83/87
COMPRESSORS	Scroll, Hermetic				
Total Quantity	14	14	14	15	16
Speed (rpm)	3500				
Module A, (Qty) Compressor Model Number Ckt A	(4) SH300	(4) SH300	(4) SH300	(4) SH300	(4) SH300
Module A, (Qty) Compressor Model Number Ckt B	(3) SH240	(3) SH300	(3) SH300	(4) SH300	(4) SH300
Module B, (Qty) Compressor Model Number Ckt A	(4) SH300	(4) SH300	(4) SH300	(4) SH300	(4) SH300
Module B, (Qty) Compressor Model Number Ckt B	(3) SH240	(3) SH240	(3) SH300	(3) SH300	(4) SH300
Module A Oil Charge (Pt, Ckt A/Ckt B)	52.5/39.4	52.5/39.4	52.5/39.4	52.5/52.5	52.5/52.5
Module B Oil Charge (Pt, Ckt A/Ckt B)	52.5/39.4	52.5/39.4	52.5/39.4	52.5/39.4	52.5/52.5
No. Capacity Steps					
Standard	14	14	14	15	16
Optional (Maximum)	16	16	16	17	18
Minimum Capacity Step (%)					
Standard	6	6	7	7	6
Optional	5	4	6	5	5
Capacity (%)					
Module A, Ckt A	31	30	29	27	25
Module A, Ckt B	19	22	21	27	25
Module B, Ckt A	31	30	29	27	25
Module B, Ckt B	19	18	21	20	25
COOLER	Direct Expansion, Shell and Tube Type				
Module A Weight (empty, lb)	1518	1518	1518	1518	1518
Module B Weight (empty, lb)	1518	1518	1518	1518	1518
Net Fluid Volume (gal) Module A/Module B	73.5/73.5	73.5/73.5	73.5/73.5	73.5/73.5	73.5/73.5
Maximum Refrigerant Pressure (psig)	445	445	445	445	445
Maximum Water-Side Pressure (psig)	300	300	300	300	300
WATER CONNECTIONS (in.)					
Inlet and Outlet, Victaulic	6	6	6	6	6
Drain (NPT)	3/4	3/4	3/4	3/4	3/4
CONDENSER FANS	Shrouded Axial Type, Vertical Discharge				
Standard Low Noise Type					
Fan Speed (rpm) Standard	1140	1140	1140	1140	1140
Module A No. Blades...Diameter (in.) Ckt A/Ckt B	9...30/9...30	9...30/9...30	9...30/9...30	9...30/9...30	9...30/9...30
Module B No. Blades...Diameter (in.) Ckt A/Ckt B	9...30/9...30	9...30/9...30	9...30/9...30	9...30/9...30	9...30/9...30
Total No. Fans	20	20	20	22	24
Module A No. Fans (Ckt A/Ckt B)	6/4	6/4	6/4	6/6	6/6
Module B No. Fans (Ckt A/Ckt B)	6/4	6/4	6/4	6/4	6/6
Total Airflow (cfm)	248,000	248,000	248,000	272,800	297,600
CONDENSER COILS					
Module A No. Coils (Ckt A/Ckt B)	6/4	6/4	6/4	6/6	6/6
Module B No. Coils (Ckt A/Ckt B)	6/4	6/4	6/4	6/4	6/6
Total Face Area (sq ft)	470	470	470	517	564
Max Working Refrigerant Pressure (psig)	656	656	656	656	656

LEGEND

Al-Cu — Aluminum Fin/Copper Tube Condenser Coil
Cu-Cu — Copper Fin/Copper Tube Condenser Coil
EXV — Electronic Expansion Valve
MCHX — Microchannel Condenser Coil

*No pumps are available for models 30RB315-390.

30RB315-390 — SI

UNIT 30RB	315	330	345	360	390
OPERATING WEIGHT (Module A/Module B, kg)*					
Al-Cu Condenser Coil	4656/4656	4808/4656	4808/4808	5448/4808	5448/5448
Cu-Cu Condenser Coil	5203/5203	5354/5203	5354/5354	6104/5354	6104/6104
MCHX Condenser Coil	4297/4297	4444/4297	4444/4444	5018/4444	5018/5018
REFRIGERANT TYPE	R-410A, EXV Controlled System				
Circuits Qty	4	4	4	4	4
Refrigerant Charge					
Std Coil, Module A Ckt A/Ckt B (kg)	73.5/48.1	73.5/59.0	73.5/59.0	73.5/73.5	73.5/73.5
Std Coil, Module B Ckt A/Ckt B (kg)	73.5/48.1	73.5/48.1	73.5/59.0	73.5/59.0	73.5/73.5
MCHX Coil, Module A Ckt A/Ckt B (kg)	37.6/24.9	37.6/29.0	37.6/29.0	37.6/39.5	37.6/39.5
MCHX Coil, Module B Ckt A/Ckt B (kg)	37.6/24.9	37.6/24.9	37.6/29.0	37.6/29.0	376/39.5
COMPRESSORS	Scroll, Hermetic				
Total Quantity	14	14	14	15	16
Speed (r/s)			58.3		
Module A, (Qty) Compressor Model Number Ckt A	(4) SH300	(4) SH300	(4) SH300	(4) SH300	(4) SH300
Module A, (Qty) Compressor Model Number Ckt B	(3) SH240	(3) SH300	(3) SH300	(4) SH300	(4) SH300
Module B, (Qty) Compressor Model Number Ckt A	(4) SH300	(4) SH300	(4) SH300	(4) SH300	(4) SH300
Module B, (Qty) Compressor Model Number Ckt B	(3) SH240	(3) SH240	(3) SH300	(3) SH300	(4) SH300
Module A Oil Charge (L, Ckt A/Ckt B)	24.8/18.6	24.8/18.6	24.8/18.6	24.8/24.8	24.8/24.8
Module B Oil Charge (L, Ckt A/Ckt B)	24.8/18.6	24.8/18.6	24.8/18.6	24.8/18.6	24.8/24.8
No. Capacity Steps					
Standard	14	14	14	15	16
Optional (Maximum)	16	16	16	17	18
Minimum Capacity Step (%)					
Standard	6	6	7	7	6
Optional	5	4	6	5	5
Capacity (%)					
Module A, Ckt A	31	30	29	27	25
Module A, Ckt B	19	22	21	27	25
Module B, Ckt A	31	30	29	27	25
Module B, Ckt B	19	18	21	20	25
COOLER	Direct Expansion, Shell and Tube Type				
Module A Weight (empty, kg)	689	689	689	689	689
Module B Weight (empty, kg)	689	689	689	689	689
Net Fluid Volume (L) Module A/Module B	278/278	278/278	278/278	278/278	278/278
Maximum Refrigerant Pressure (kPa)	3068	3068	3068	3068	3068
Maximum Water-Side Pressure (kPa)	2068	2068	2068	2068	2068
WATER CONNECTIONS (in.)					
Inlet and Outlet, Victaulic	6	6	6	6	6
Drain (NPT)	3/4	3/4	3/4	3/4	3/4
CONDENSER FANS	Shrouded Axial Type, Vertical Discharge				
Standard Low Noise Type					
Fan Speed (r/s) Standard	19	19	19	19	19
Module A No. Blades...Diameter (mm) Ckt A/Ckt B	9...762/9...762	9...762/9...762	9...762/9...762	9...762/9...762	9...762/9...762
Module B No. Blades...Diameter (mm) Ckt A/Ckt B	9...762/9...762	9...762/9...762	9...762/9...762	9...762/9...762	9...762/9...762
Total No. Fans	20	20	20	22	24
Module A No. Fans (Ckt A/Ckt B)	6/4	6/4	6/4	6/6	6/6
Module B No. Fans (Ckt A/Ckt B)	6/4	6/4	6/4	6/4	6/6
Total Airflow (L/s)	117 042	117 042	117 042	128 747	140 452
CONDENSER COILS					
Module A No. Coils (Ckt A/Ckt B)	6/4	6/4	6/4	6/6	6/6
Module B No. Coils (Ckt A/Ckt B)	6/4	6/4	6/4	6/4	6/6
Total Face Area (sq m)	43.66	43.66	43.66	48.03	52.4
Max Working Refrigerant Pressure (kPa)	4522	4522	4522	4522	4522

LEGEND

Al-Cu — Aluminum Fin/Copper Tube Condenser Coil
Cu-Cu — Copper Fin/Copper Tube Condenser Coil
EXV — Electronic Expansion Valve
MCHX — Microchannel Condenser Coil

*No pumps are available for models 30RB315-390.

Physical data (cont)

UNIT WEIGHTS — STANDARD UNITS

AL/CU COIL UNITS WITHOUT PUMP — ENGLISH

UNIT 30RB	MOUNTING WEIGHT (lb) No Pump Al/Cu*				
	A	B	C	D	Total
060	869	913	1193	1136	4111
070	891	936	1275	1215	4317
080	982	958	1313	1346	4600
090	1159	1397	1845	1531	5932
100	1173	1431	1952	1600	6155
110	1319	1448	1964	1788	6519

UNIT 30RB	MOUNTING WEIGHT (lb) No Pump Al/Cu*						
	A	B	C	D	E	F	Total
120	731	1762	809	985	2347	1056	7,690
130	728	1850	818	1168	2531	949	8,045
150	893	2085	888	1228	2864	1217	9,174
160	1106	2189	1104	1483	2923	1463	10,266
170	1142	2220	1108	1487	3039	1606	10,601

UNIT 30RB	MOUNTING WEIGHT (lb) No Pump Al/Cu*								
	A	B	C	D	E	F	G	H	Total
190	1094	1388	1484	1101	1479	2004	1938	1526	12,013
210	916	1804	2139	853	1311	3044	2440	1228	13,734
225	947	1836	2144	855	1313	3049	2569	1354	14,067
250	1122	2271	2133	850	1307	3035	3166	1584	15,468
275	627	2269	2805	1292	1866	3808	3169	1080	16,915
300	899	2602	2792	1284	1859	3795	3640	1435	18,306

AL/CU COIL UNITS WITHOUT PUMP — SI

UNIT 30RB	MOUNTING WEIGHT (kg) No Pump Al/Cu*				
	A	B	C	D	Total
060	395	415	542	516	1869
070	405	425	580	552	1962
080	447	436	597	612	2091
090	527	635	839	696	2697
100	533	650	887	727	2798
110	600	658	893	813	2963

UNIT 30RB	MOUNTING WEIGHT (kg) No Pump Al/Cu*						
	A	B	C	D	E	F	Total
120	332	799	367	447	1065	479	3488
130	330	839	371	530	1148	431	3649
150	405	946	403	557	1299	552	4161
160	503	995	502	674	1328	665	4666
170	519	1009	503	676	1381	730	4819

UNIT 30RB	MOUNTING WEIGHT (kg) No Pump Al/Cu*								
	A	B	C	D	E	F	G	H	Total
190	497	631	674	500	672	911	881	694	5461
210	416	820	972	388	596	1384	1109	558	6243
225	431	835	975	389	597	1386	1168	615	6394
250	510	1032	970	386	594	1380	1439	720	7031
275	285	1032	1275	587	848	1731	1440	491	7689
300	409	1183	1269	584	845	1725	1654	652	8321

CU/CU COIL UNITS WITHOUT PUMP — ENGLISH

UNIT 30RB	MOUNTING WEIGHT (lb) No Pump Cu/Cu†				
	A	B	C	D	Total
060	992	1037	1311	1254	4,593
070	1014	1059	1393	1333	4,799
080	1106	1081	1431	1464	5,082
090	1342	1584	2020	1711	6,656
100	1355	1619	2126	1780	6,879
110	1503	1635	2139	1967	7,243

UNIT 30RB	MOUNTING WEIGHT (lb) No Pump Cu/Cu†						
	A	B	C	D	E	F	Total
120	837	1980	917	1088	2551	1161	8,534
130	850	2100	940	1288	2764	1069	9,010
150	1015	2334	1009	1348	3097	1336	10,139
160	1252	2497	1266	1642	3218	1599	11,472
170	1289	2528	1270	1645	3334	1742	11,807

UNIT 30RB	MOUNTING WEIGHT (lb) No Pump Cu/Cu†								
	A	B	C	D	E	F	G	H	Total
190	1257	1595	1691	1263	1638	2199	2133	1684	13,460
210	1018	2045	2410	978	1427	3297	2681	1326	15,181
225	1049	2078	2415	981	1429	3301	2810	1452	15,514
250	1283	2577	2404	976	1423	3288	3463	1744	17,157
275	732	2554	3193	1501	2059	4185	3446	1175	18,845
300	1064	2950	3179	1494	2053	4172	3974	1591	20,477

CU/CU COIL UNITS WITHOUT PUMP — SI

UNIT 30RB	MOUNTING WEIGHT (kg) No Pump Cu/Cu†				
	A	B	C	D	Total
060	451	471	596	570	2088
070	461	481	633	606	2181
080	503	491	651	665	2310
090	610	720	918	778	3026
100	616	736	966	809	3127
110	683	743	972	894	3292

UNIT 30RB	MOUNTING WEIGHT (kg) No Pump Cu/Cu†						
	A	B	C	D	E	F	Total
120	380	898	416	494	1157	527	3871
130	386	952	426	584	1254	485	4087
150	461	1059	458	611	1405	606	4599
160	569	1135	575	746	1463	727	5215
170	586	1149	577	748	1516	792	5367

UNIT 30RB	MOUNTING WEIGHT (kg) No Pump Cu/Cu†								
	A	B	C	D	E	F	G	H	Total
190	571	725	769	574	744	1000	970	765	6118
210	463	930	1095	445	649	1498	1219	603	6901
225	477	944	1098	446	650	1501	1277	660	7052
250	583	1171	1093	444	647	1494	1574	793	7799
275	333	1161	1451	682	936	1902	1566	534	8566
300	484	1341	1445	679	933	1896	1807	723	9308

MCHX COIL UNITS WITHOUT PUMP — ENGLISH

UNIT 30RB	MOUNTING WEIGHT (lb) No Pump MCHX**				
	A	B	C	D	Total
060	800	840	1098	1045	3,783
070	821	862	1175	1120	3,978
080	911	889	1218	1249	4,267
090	1065	1283	1695	1406	5,449
100	1079	1316	1796	1472	5,663
110	1219	1339	1816	1653	6,027

UNIT 30RB	MOUNTING WEIGHT (lb) No Pump MCHX**						
	A	B	C	D	E	F	Total
120	660	1614	737	915	2210	985	7,119
130	648	1683	738	1088	2377	870	7,402
150	810	1914	805	1146	2706	1136	8,517
160	1020	2020	1019	1368	2698	1350	9,475
170	1055	2052	1024	1374	2809	1485	9,799

UNIT 30RB	MOUNTING WEIGHT (lb) No Pump MCHX**								
	A	B	C	D	E	F	G	H	Total
190	1007	1278	1367	1014	1362	1846	1785	1405	11,064
210	852	1677	1989	793	1219	2831	2269	1142	12,772
225	881	1709	1996	796	1222	2838	2391	1260	13,093
250	1041	2107	1979	789	1212	2815	2937	1469	14,349
275	580	2099	2594	1195	1726	3523	2931	999	15,647
300	830	2401	2576	1185	1716	3502	3359	1324	16,893

MCHX COIL UNITS WITHOUT PUMP — SI

UNIT 30RB	MOUNTING WEIGHT (kg) No Pump MCHX**				
	A	B	C	D	Total
060	363	381	498	474	1716
070	372	391	533	508	1804
080	413	403	552	566	1934
090	483	582	769	638	2472
100	489	597	815	668	2569
110	553	607	824	750	2734

UNIT 30RB	MOUNTING WEIGHT (kg) No Pump MCHX**						
	A	B	C	D	E	F	Total
120	299	732	334	415	1002	447	3229
130	294	763	335	493	1078	394	3358
150	367	868	365	520	1227	515	3863
160	463	916	492	620	1224	612	4297
170	478	931	464	623	1274	673	4443

UNIT 30RB	MOUNTING WEIGHT (kg) No Pump MCHX**								
	A	B	C	D	E	F	G	H	Total
190	457	580	620	460	618	837	810	637	5019
210	386	761	902	360	553	1284	1029	518	5793
225	400	775	905	361	554	1287	1084	571	5937
250	472	956	898	358	550	1277	1332	666	6509
275	263	952	1176	542	783	1598	1329	453	7096
300	376	1089	1168	537	778	1588	1523	600	7659

*Condenser Coil: Aluminum Fins/Copper Tubing.
†Condenser Coil: Copper Fins/Copper Tubing.
** Condenser Coil: Microchannel Design.

30RB060-110

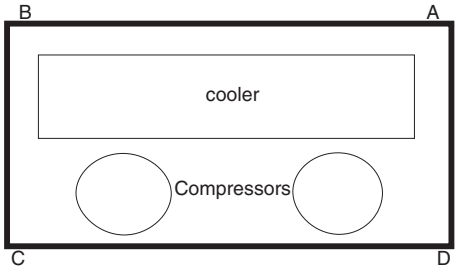

30RB120-150

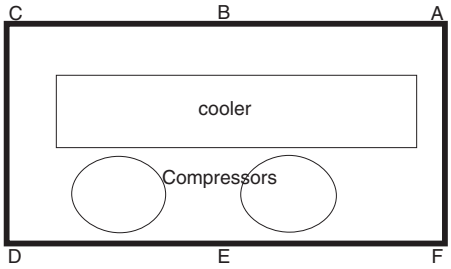

30RB160, 170, 315A, 315B, 330A, 330B, 345A, 345B, 360B

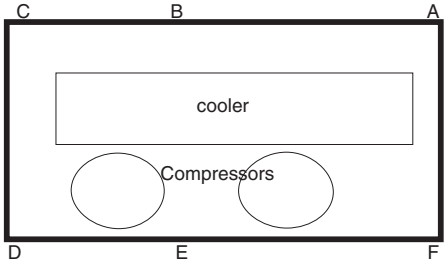

30RB190-300, 360A, 390A, 390B

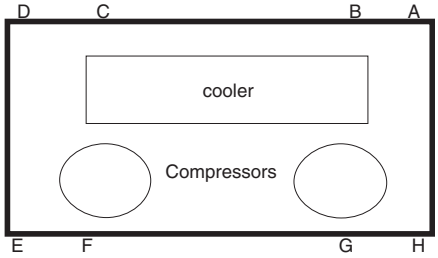

NOTE: Mounting weights are calculated at mounting locations. Refer to certified drawings starting on page 19 for mounting locations.

UNIT WEIGHTS — SINGLE PUMP UNITS

AL/CU COIL UNITS WITH SINGLE PUMP — ENGLISH

UNIT 30RB	MOUNTING WEIGHT (lb) Single Pump Al/Cu*				
	A	B	C	D	Total
060	1085	1127	1230	1184	4626
070	1107	1150	1312	1263	4832
080	1193	1164	1354	1388	5100
090	1353	1620	1885	1575	6432
100	1366	1655	1991	1644	6655
110	1565	1653	1974	1868	7059

UNIT 30RB	MOUNTING WEIGHT (lb) Single Pump Al/Cu*						
	A	B	C	D	E	F	Total
120	731	2062	960	961	2460	1056	8,230
130	728	2149	969	1144	2645	949	8,585
150	893	2486	1031	1165	3035	1217	9,827
160	1238	2583	1104	1483	3155	1357	10,919
170	1279	2609	1108	1487	3276	1495	11,254

UNIT 30RB	MOUNTING WEIGHT (lb) Single Pump Al/Cu*								
	A	B	C	D	E	F	G	H	Total
190	1094	1510	1889	1101	1479	2178	1890	1526	12,666

AL/CU COIL UNITS WITH SINGLE PUMP — SI

UNIT 30RB	MOUNTING WEIGHT (kg) Single Pump Al/Cu*				
	A	B	C	D	Total
060	493	512	559	538	2103
070	503	523	597	574	2196
080	542	529	616	631	2318
090	615	736	857	716	2924
100	621	752	905	747	3025
110	711	751	897	849	3209

UNIT 30RB	MOUNTING WEIGHT (kg) Single Pump Al/Cu*						
	A	B	C	D	E	F	Total
120	332	935	435	436	1116	479	3733
130	330	975	440	519	1200	431	3894
150	405	1128	468	528	1377	552	4458
160	563	1174	502	674	1434	617	4963
170	582	1186	503	676	1489	679	5116

UNIT 30RB	MOUNTING WEIGHT (kg) Single Pump Al/Cu*								
	A	B	C	D	E	F	G	H	Total
190	497	686	858	500	672	990	859	694	5757

CU/CU COIL UNITS WITH SINGLE PUMP — ENGLISH

UNIT 30RB	MOUNTING WEIGHT (lb) Single Pump Cu/Cu†				
	A	B	C	D	Total
060	1208	1250	1348	1302	5,108
070	1230	1273	1430	1381	5,314
080	1317	1287	1472	1506	5,582
090	1537	1806	2060	1753	7,156
100	1549	1841	2166	1823	7,379
110	1749	1839	2150	2045	7,783

UNIT 30RB	MOUNTING WEIGHT (lb) Single Pump Cu/Cu†						
	A	B	C	D	E	F	Total
120	837	2280	1068	1065	2664	1161	9,074
130	850	2399	1091	1264	2877	1069	9,550
150	1015	2735	1153	1284	3269	1336	10,792
160	1382	2894	1266	1642	3447	1495	12,125
170	1424	2920	1270	1645	3569	1633	12,460

UNIT 30RB	MOUNTING WEIGHT (lb) Single Pump Cu/Cu†								
	A	B	C	D	E	F	G	H	Total
190	1257	1718	2095	1263	1638	2374	2084	1684	14,113

CU/CU COIL UNITS WITH SINGLE PUMP — ENGLISH

UNIT 30RB	MOUNTING WEIGHT (kg) Single Pump Cu/Cu†				
	A	B	C	D	Total
060	549	568	613	592	2322
070	559	579	650	628	2415
080	599	585	669	684	2537
090	699	821	937	797	3253
100	704	837	985	828	3354
110	795	836	977	930	3538

UNIT 30RB	MOUNTING WEIGHT (kg) Single Pump Cu/Cu†						
	A	B	C	D	E	F	Total
120	380	1034	484	483	1209	527	4116
130	386	1088	495	573	1305	485	4332
150	461	1241	523	583	1483	606	4895
160	628	1315	575	746	1567	680	5511
170	647	1327	577	748	1622	742	5664

UNIT 30RB	MOUNTING WEIGHT (kg) Single Pump Cu/Cu†								
	A	B	C	D	E	F	G	H	Total
190	571	781	952	574	744	1079	947	765	6415

*Condenser Coil: Aluminum Fins/Copper Tubing.
†Condenser Coil: Copper Fins/Copper Tubing.
** Condenser Coil: Microchannel Design.

Physical data (cont)

UNIT WEIGHTS — SINGLE PUMP UNITS (cont)

MCHX COIL UNITS WITH SINGLE PUMP — ENGLISH

UNIT 30RB	MOUNTING WEIGHT (lb) Single Pump MCHX**				
	A	B	C	D	Total
060	1008	1047	1143	1100	4298
070	1030	1069	1220	1174	4493
080	1115	1088	1266	1298	4767
090	1251	1498	1743	1457	5949
100	1265	1532	1844	1522	6163
110	1456	1537	1836	1738	6567

UNIT 30RB	MOUNTING WEIGHT (lb) Single Pump MCHX**						
	A	B	C	D	E	F	Total
120	660	1914	887	891	2322	985	7,659
130	648	1982	888	1064	2490	870	7,942
150	810	2316	948	1083	2877	1136	9,170
160	1148	2395	1024	1376	2926	1259	10,128
170	1188	2423	1029	1381	3043	1388	10,452

UNIT 30RB	MOUNTING WEIGHT (lb) Single Pump MCHX**								
	A	B	C	D	E	F	G	H	Total
190	1012	1396	1747	1019	1368	2015	1748	1412	11,717

MCHX COIL UNITS WITH SINGLE PUMP — SI

UNIT 30RB	MOUNTING WEIGHT (kg) Single Pump MCHX**				
	A	B	C	D	Total
060	457	475	518	499	1949
070	467	485	553	532	2037
080	506	493	574	589	2162
090	567	679	790	661	2697
100	574	695	836	690	2795
110	660	697	833	788	2978

UNIT 30RB	MOUNTING WEIGHT (kg) Single Pump MCHX**						
	A	B	C	D	E	F	Total
120	299	868	402	404	1053	447	3474
130	294	899	403	483	1129	394	3603
150	367	1051	430	491	1305	515	4160
160	521	1086	464	624	1327	571	4593
170	539	1099	467	626	1380	629	4740

UNIT 30RB	MOUNTING WEIGHT (kg) Single Pump MCHX**								
	A	B	C	D	E	F	G	H	Total
190	459	633	792	462	620	914	763	640	5313

UNIT WEIGHTS — DUAL PUMP UNITS

AL/CU COIL UNITS WITH DUAL PUMP — ENGLISH

UNIT 30RB	MOUNTING WEIGHT (lb) Dual Pump Al/Cu*				
	A	B	C	D	Total
060	1218	1259	1254	1213	4,944
070	1240	1281	1336	1293	5,150
080	1372	1339	1389	1424	5,523
090	1518	1808	1919	1611	6,855
100	1530	1843	2025	1680	7,078
110	1741	1796	1983	1922	7,442

UNIT 30RB	MOUNTING WEIGHT (lb) Dual Pump Al/Cu*						
	A	B	C	D	E	F	Total
120	731	2281	1061	951	2534	1056	8,613
130	728	2367	1071	1133	2719	949	8,968
150	893	2864	1147	1122	3177	1217	10,419
160	1336	2962	1104	1483	3344	1282	11,511
170	1383	2983	1108	1487	3471	1415	11,846

UNIT 30RB	MOUNTING WEIGHT (lb) Dual Pump Al/Cu*								
	A	B	C	D	E	F	G	H	Total
190	1094	1588	2288	1101	1479	2303	1879	1526	13,258

AL/CU COIL UNITS WITH DUAL PUMP — SI

UNIT 30RB	MOUNTING WEIGHT (kg) Dual Pump Al/Cu*				
	A	B	C	D	Total
060	554	572	570	552	2247
070	564	582	607	588	2341
080	624	609	631	647	2511
090	690	822	872	732	3116
100	695	838	920	764	3217
110	791	817	901	874	3383

UNIT 30RB	MOUNTING WEIGHT (kg) Dual Pump Al/Cu*						
	A	B	C	D	E	F	Total
120	332	1035	481	431	1149	479	3907
130	330	1074	486	514	1233	431	4068
150	405	1299	520	509	1441	552	4726
160	607	1347	502	674	1520	583	5232
170	629	1356	503	676	1578	643	5385

UNIT 30RB	MOUNTING WEIGHT (kg) Dual Pump Al/Cu*								
	A	B	C	D	E	F	G	H	Total
190	497	722	1040	500	672	1047	854	1526	6014

CU/CU COIL UNITS WITH DUAL PUMP — ENGLISH

UNIT 30RB	MOUNTING WEIGHT (lb) Dual Pump Cu/Cu†				
	A	B	C	D	Total
060	1341	1382	1371	1331	5,426
070	1363	1405	1453	1411	5,632
080	1495	1462	1507	1541	6,005
090	1702	1994	2095	1788	7,579
100	1714	2030	2201	1858	7,802
110	1926	1982	2160	2099	8,166

UNIT 30RB	MOUNTING WEIGHT (lb) Dual Pump Cu/Cu†						
	A	B	C	D	E	F	Total
120	837	2498	1169	1054	2739	1161	9,457
130	850	2616	1193	1252	2953	1069	9,933
150	1015	3112	1270	1240	3411	1336	11,384
160	1481	3273	1266	1642	3637	1420	12,717
170	1527	3294	1270	1645	3763	1553	13,052

UNIT 30RB	MOUNTING WEIGHT (lb) Dual Pump Cu/Cu†								
	A	B	C	D	E	F	G	H	Total
190	1257	1799	2492	1263	1638	2502	2071	1684	14,705

CU/CU COIL UNITS WITH DUAL PUMP — SI

UNIT 30RB	MOUNTING WEIGHT (kg) Dual Pump Cu/Cu†				
	A	B	C	D	Total
060	610	628	623	605	2466
070	620	638	661	641	2560
080	680	665	685	701	2730
090	774	906	952	813	3445
100	779	923	1000	845	3547
110	875	901	982	954	3712

UNIT 30RB	MOUNTING WEIGHT (kg) Dual Pump Cu/Cu†						
	A	B	C	D	E	F	Total
120	380	1133	530	478	1242	527	4290
130	386	1187	541	568	1339	485	4506
150	461	1412	576	562	1547	606	5164
160	673	1488	575	746	1653	646	5781
170	694	1497	577	748	1710	706	5933

UNIT 30RB	MOUNTING WEIGHT (kg) Dual Pump Cu/Cu†								
	A	B	C	D	E	F	G	H	Total
190	571	818	1133	574	744	1137	941	1684	6669

MCHX COIL UNITS WITH DUAL PUMP — ENGLISH

UNIT 30RB	MOUNTING WEIGHT (lb) Dual Pump MCHX**				
	A	B	C	D	Total
060	1137	1175	1171	1133	4,616
070	1158	1197	1248	1208	4,811
080	1289	1258	1305	1338	5,190
090	1411	1680	1784	1497	6,372
100	1424	1715	1884	1563	6,586
110	1626	1677	1852	1795	6,950

UNIT 30RB	MOUNTING WEIGHT (lb) Dual Pump MCHX**						
	A	B	C	D	E	F	Total
120	660	2134	987	882	2396	985	8,042
130	648	2201	989	1054	2564	870	8,325
150	810	2695	1063	1041	3017	1136	9,762
160	1244	2759	1028	1381	3114	1194	10,720
170	1289	2781	1033	1386	3236	1319	11,044

UNIT 30RB	MOUNTING WEIGHT (lb) Dual Pump MCHX**								
	A	B	C	D	E	F	G	H	Total
190	1016	1474	2124	1022	1373	2138	1745	1417	12,309

MCHX COIL UNITS WITH DUAL PUMP — SI

UNIT 30RB	MOUNTING WEIGHT (kg) Dual Pump MCHX**				
	A	B	C	D	Total
060	516	533	531	514	2094
070	525	543	566	548	2182
080	585	571	592	607	2355
090	640	762	809	679	2890
100	646	778	854	709	2987
110	737	761	840	814	3152

UNIT 30RB	MOUNTING WEIGHT (kg) Dual Pump MCHX**						
	A	B	C	D	E	F	Total
120	299	968	448	400	1087	447	3648
130	294	998	449	478	1163	394	3776
150	367	1223	482	472	1368	515	4428
160	564	1251	466	626	1412	541	4860
170	585	1261	468	629	1468	598	5009

UNIT 30RB	MOUNTING WEIGHT (kg) Dual Pump MCHX**								
	A	B	C	D	E	F	G	H	Total
190	461	668	963	463	623	970	791	643	5582

UNIT WEIGHTS — UNITS WITH OPTIONAL HEAT RECLAIM

MCHX COIL UNITS WITH HEAT RECLAIM — ENGLISH

UNIT 30RB	MOUNTING WEIGHT (lb) Heat Reclaim MCHX**								
	A	B	C	D	Total				
060	1185	1175	1166	1176	4703				
070	1204	1196	1245	1253	4898				
080	1302	1215	1289	1381	5187				
090	1507	1689	1776	1584	6555				
100	1516	1723	1878	1652	6769				
110	1671	1732	1899	1832	7133				
UNIT 30RB	MOUNTING WEIGHT (lb) Heat Reclaim MCHX**								
	A	B	C	D	E	F	Total		
120	842	2353	889	863	2492	966	8405		
130	846	2497	905	1027	2685	854	8814		
150	1017	2723	969	1089	3019	1111	9929		
160	1229	2841	1168	1314	3127	1312	10991		
170	1268	2865	1171	1316	3245	1450	11315		
UNIT 30RB	MOUNTING WEIGHT (lb) Heat Reclaim MCHX**								
	A	B	C	D	E	F	G	H	Total
190	962	1311	1461	937	1519	2620	2296	1474	12580

*Condenser Coil: Aluminum Fins/Copper Tubing.
†Condenser Coil: Copper Fins/Copper Tubing.
** Condenser Coil: Microchannel Design.

MCHX COIL UNITS WITH HEAT RECLAIM — SI

UNIT 30RB	MOUNTING WEIGHT (kg) Heat Reclaim MCHX**								
	A	B	C	D	Total				
060	538	533	529	533	2133				
070	546	542	565	568	2222				
080	590	551	585	627	2353				
090	683	766	805	718	2974				
100	688	782	852	749	3071				
110	758	786	861	831	3236				
UNIT 30RB	MOUNTING WEIGHT (kg) Heat Reclaim MCHX**								
	A	B	C	D	E	F	Total		
120	382	1067	403	391	1130	438	3813		
130	384	1133	411	466	1218	387	3998		
150	462	1235	440	494	1370	504	4504		
160	557	1289	530	596	1419	595	4986		
170	575	1300	531	597	1472	658	5133		
UNIT 30RB	MOUNTING WEIGHT (kg) Heat Reclaim MCHX**								
	A	B	C	D	E	F	G	H	Total
190	436	595	663	425	689	1188	1041	669	5706

Options and accessories

ITEM	FACTORY-INSTALLED OPTION	FIELD-INSTALLED ACCESSORY
Condenser Coil and Sound Options		
MCHX E-Coat	X	
Aluminum Fin/Copper Tube	X	
Aluminum Fin/Copper Tube, Pre-Coated	X	
Aluminum Fin/Copper Tube, E-Coat	X	
Copper Fin/Copper Tube, E-Coat	X	
Copper Fin/Copper Tube Condenser Coils	X	
Compressor Sound Reduction Enclosures	X	
Heat Reclaim Condenser	X	
Controls/Communication Options		
BACnet Communications	X	
BACnet Translator Control	X	X
Chillervisor System Manager III Multi-Unit Control		X
Energy Management Module	X	X
LON (Local Operating Network) Translator Control	X	X
Navigator™ Display		X
Remote Service Port		X
Remote Enhanced Display		X
Service Option	X	
Touch Pilot™ Display		X
Dual Chiller Accessory Kit		X
Cooler Options		
Freeze Protection — Cooler Heaters	X	
Medium Temperature Brine (not required for 30RB060-100)	X	
Remote Cooler		X
CRN Cooler (Canada Only)	X	
Electrical Options		
Unit-Mounted Main Disconnect, Non-Fused	X	
Convenience Outlet		X
High SCCR (Short Circuit Current Rating) (not available at 208/230 volts)	X	
Hydronics Option		
Hydronic Pump Package (with or without VFD)	X	
Refrigeration Circuit Options		
Compressor Suction Service Valve	X	
Low Ambient Temperature Head Pressure Control	X	X
Minimum Load Control	X	X
Suction Line Insulation	X	
Security/Packaging Options		
Condenser Coil Trim Panels	X	X
Security Grilles	X	X
Full Hail Guard		X
Upper Hail Guard	X	
Full End Screen	X	

Factory-installed options

Condenser coil options are available to match coil construction to the site conditions for the best durability. Refer to the Condenser Coil Corrosion Protection Options table on page 18 or the appropriate selection guide for more information.

Heat reclaim option adds a water-cooled condenser in parallel with the standard air-cooled condenser for the purpose of simultaneously producing tempered hot water while satisfying the chilled water requirement. This full heat reclaim option can lower overall building energy consumption significantly, producing total COP (coefficient of performance) values of 6.0 or greater. This option is not available on unit sizes 210-390 or with the hydronic pump package option.

Compressor suction service valve provides additional isolation of the compressor from the cooler vessel for service. Standard refrigerant discharge isolation and liquid valves enable service personnel to store the refrigerant charge in the cooler or condenser during servicing.

Suction line insulation is tubular closed-cell insulation. This option is required with the medium temperature brine option and recommended for areas of high dewpoints where condensation may be a concern.

Hydronic pump package option adds circulating pumps, a combination valve (isolation, modulation and check), strainer, Victaulic field piping connections, insulation and heaters, and pressure/temperature taps (3). The pumps are available in single or dual (lead/lag controlled) cooler pump versions with total dynamic head external to the chiller from approximately 20 to 140 ft (6.1 m to 42.7 m). This package is available with or without a VFD. Also includes heater and insulation for freeze protection to –20 F (–29 C) with the freeze protection option. The hydronic pump package is available for sizes 30RB060-190 and cannot be used in conjunction with the heat reclaim option.

Freeze protection with cooler heaters provides protection from cooler freeze-up to –20 F (–29 C).

Energy management module provides energy management capabilities to minimize chiller energy consumption. Several features are provided with this module including leaving fluid temperature reset, cooling set point reset or demand limit control from a 4 to 20 mA signal, 2-step demand limit control (from 0 to 100%) activated by a remote contact closure, and discrete input for "Ice Done" indication for ice storage system interface.

Service option provides a remote service port for Navigator display connection and a factory-installed convenience outlet includes 4-amp GFI (ground fault interrupt) receptacle with independent fuse protection. Convenience outlet is 115-v female receptacle. Service option not available with 380-v.

Low ambient temperature head pressure control permits operation of the 30RB units to –20 F (–29 C) outdoor ambient temperature. The control is also available as a field-installed accessory and may require field-installed wind baffles.

Medium temperature brine option allows for leaving fluid temperatures to be set between 15 and 30 F (–9.4 and –1.1 C). The chillers are modified to correct for the lower refrigerant flow rates. Solenoid valves are added to sizes 110 through 390 to ensure proper oil return at part load conditions.

NOTE: Low ambient head pressure control and suction line insulation are required with the medium temperature brine option.

CRN cooler (Canada only) provides minor cooler modification to meet Canadian code.

Unit-mounted non-fused disconnect option provides non-fused disconnect capability for power and control located at the unit. This option is not available on 30RB060-120 with dual point power.

Minimum load control option allows additional capacity reduction for unit operation below the minimum step of unloading (down to 6% of the full-load unit capacity, depending on unit size). Minimum load control is also available as a field-installed accessory. This option is not available on applications requiring the medium temperature brine option.

Security grilles protect the condenser coil from damage with coated wire grilles with openings of 1 by 4 in. (25 mm x 102 mm). The security grille option requires the condenser coil trim panel option. Security grilles are also available as a field-installed accessory.

Condenser coil trim panels provide an aesthetic, finished appearance for the condenser coil ends of the cooler/pump connection side of the unit. Condenser coil trim panels are also available as a field-installed accessory.

Upper hail guard consists of louvered panels on the ends of the machine, which firmly fasten to the machine frame and provide coverage from the top of the unit to the bottom of the coil. A hinged accessory hail guard is also available. The accessory covers the entire unit end (both ends), and, with its hinged design, is not identical to this option.

Full end screen consists of louvered panels on the ends of the machine, providing complete coverage from the top to the bottom of the unit. This option functions as both a privacy screen and a hail guard. For hail protection, an accessory hail guard is also available. The accessory covers the entire unit end (both ends), and, with its hinged design, is not identical to this option.

High SCCR (short circuit current rating) devices allow the chiller to tolerate a 65 kA (208/230 and 460-v units) or 25 kA (575-v units) short circuit current for a brief period of time while protecting downstream components. The high SCCR provides a higher level of protection than the standard chiller components. This option is not available on any 208/230 volt application, or on 30RB060-120 with dual point power.

Compressor sound enclosures provide sound reduction for the scroll compressors.

BACnet communication option — Provides factory installed communication capability with a BACnet MS/TP network. Allows integration with i-Vu® Open control system or a BACnet building automation system.

BACnet translator control provides an interface between the chiller and a BACnet Local Area Network (LAN, i.e.,MS/TP EIA-485). BACnet translator control is also available as a field-installed accessory. Field programming is required.

LON translator control interface between the chiller and a Local Operating Network (LON, i.e., LonWorks* FT-10A ANSI/EIA-709.1). LON translator control is also available as a field-installed accessory. Field programming is required.

Field-installed accessories

Minimum load control accessory allows additional capacity reduction for unit operation below the minimum step of unloading (down to 6% of the minimum unit capacity, depending on unit size) via hot gas bypass. This option is not available on applications requiring the medium temperature brine option.

Full hail guard consists of hinged, louvered panels, which cover both ends of the unit. This accessory provides complete protection from hail and flying debris. For hail protection, two factory options are also available. These options directly fasten to the end of the chillers (are not hinged), and therefore are not identical to this accessory.

Navigator™ display accessory provides a portable handheld display for convenient access to unit status, operation, configuration and troubleshooting diagnostics capability. The four-line, 80-character LCD display provides clear language information in English, French, Spanish, or Portuguese. The weatherproof enclosure and industrial grade extension cord enables the Navigator display to be ideally suited for outdoor applications. Magnets located on the back of the module allow attachment to any sheet metal component for hands-free operation.

Remote enhanced display accessory kit contains a remotely mounted indoor 40-character per line, 16-line display panel for unit diagnostics.

* Registered trademark of Echelon Corporation.

Options and accessories (cont)

Touch Pilot™ display used as an accessory is a cost-effective, touch-screen, remote-mount device that can be used in lieu of the remote enhanced display.

Chillervisor System Manager III multi-unit control accessory allows sequencing of between two and eight chillers in parallel. Pump control is also provided.

Low ambient temperature head pressure control permits operation of the 30RB units to –20 F (–29 C) outdoor ambient temperature. The control is also available as a factory-installed option and may require field-installed wind baffles.

Energy management module provides energy management capabilities to minimize chiller energy consumption. Several features are provided with this module including leaving fluid temperature reset, cooling set point reset or demand limit control from a 4 to 20 mA signal, 2-step demand limit control (from 0 to 100%) activated by a remote contact closure (one-step demand limit does not require the energy management module), and discrete input for "Ice Done" indication for ice stage system interface.

Remote service port consists of a receptacle for Navigator connection. The port is housed in a waterproof enclosure conveniently located for easy access to information during operation and maintenance routines.

Convenience outlet includes a 4-amp GFI (ground fault interrupt) receptacle with independent fuse protection. Convenience outlet is a 115-v female receptacle. It is not available with 380-v.

Remote cooler accessory provides the additional hardware required to remotely mount the cooler from the unit. The cooler-unit separation is limited to 75 equivalent feet. The remote cooler accessory cannot be used with MCHX condenser coils or in brine applications. Never bury refrigerant piping on these or any other applications.

BACnet translator control provides an interface between the chiller and a BACnet Local Area Network (LAN, i.e., MS/TP EIA-485). BACnet translator control is also available as a factory-installed option. Field programming is required.

LON translator control provides an interface between the chiller and a Local Operating Network (LON, i.e., LonWorks FT-10A ANSI/EIA-709.1). LON Translator control is also available as a factory-installed option. Field programming is required.

Security grilles protect the condenser coil from damage with coated wire grilles with openings of 1 by 4 in. (25 mm x 102 mm). The security grille accessory requires the condenser coil trim panel accessory. Security grilles are also available as a factory-installed option.

Condenser coil trim panels provide an aesthetic, finished appearance for the condenser coil ends of the cooler/pump connection side of the unit. Condenser coil trim panels are also available as a factory-installed option.

Dual chiller accessory kit provides the additional hardware (thermistors, wells, connectors) required for applications with 2 chillers running in parallel.

CONDENSER COIL CORROSION PROTECTION OPTIONS

ENVIRO-SHIELD™ OPTION*	ENVIRONMENT				
	Standard	Mild Coastal	Severe Coastal	Industrial	Combined Industrial/Coastal
Novation® Heat Exchanger (Standard)	See NACO Packaged Chiller Builder				
AL Fins	X				
CU Fins		X			
AL Fins, E-coat			X	X	X
CU Fins, E-coat			X		
AL Fins, Pre-coated		X			

LEGEND

AL — Aluminum
CU — Copper
NACO — North American Commercial Operations

* See NACO Packaged Chiller Builder for details. Additional corrosion protection is available. For Novation heat exchangers, see selection guide "Environmental Corrosion Protection, Novation Heat Exchanger with Microchannel Technology" (Publication 04-581042-01). For RTPF heat exchangers, see selection guide "Environmental Corrosion Protection, Heat Exchangers with Round Tube/Plate Fin (RTPF) Coils" (Publication 04-581043-01).

30RB060, 070 AIR-COOLED CHILLER

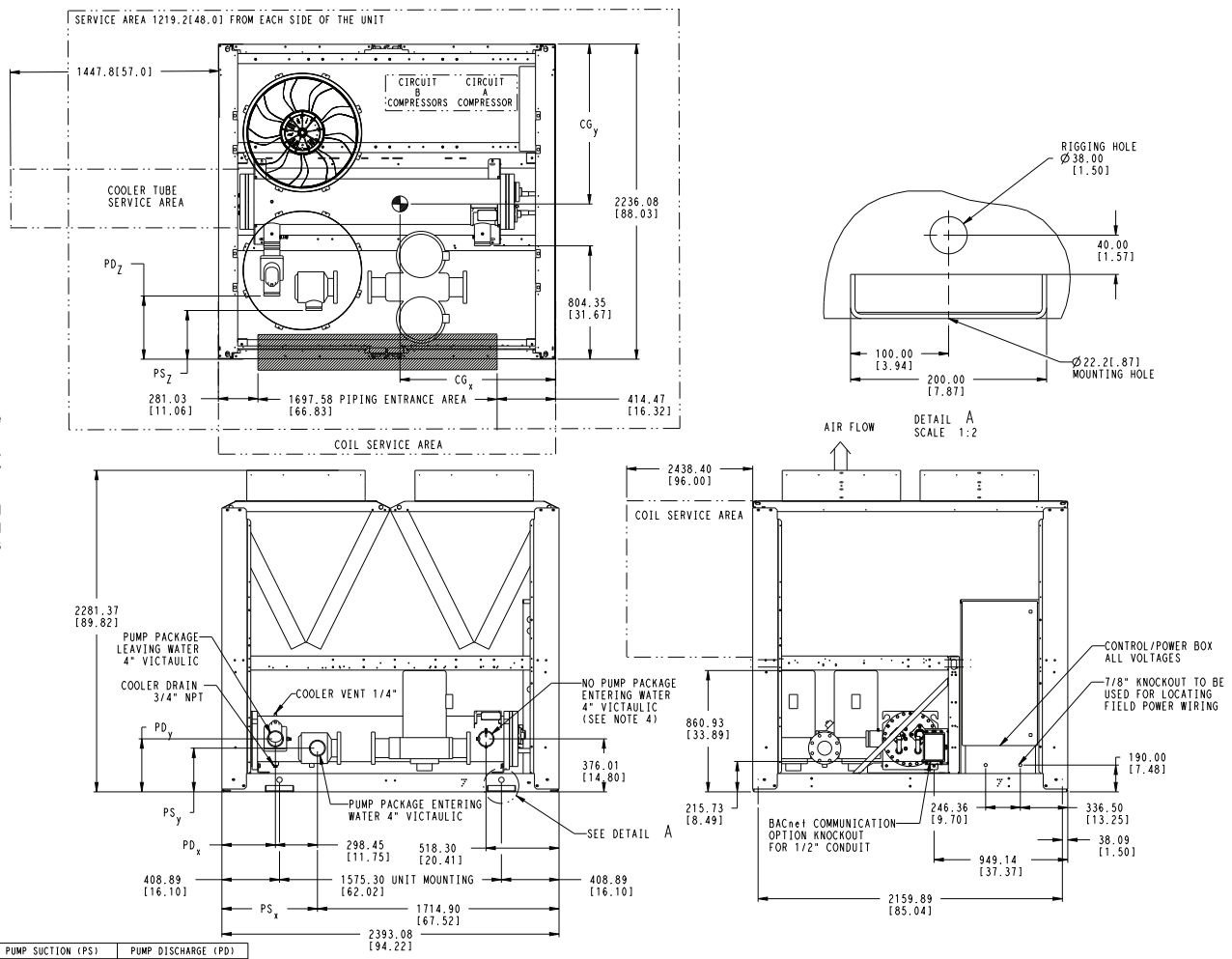

NOTES:
1. Unit must have clearances as follows:
   Top — Do not restrict.
   Sides and End — 6′ from solid surface.
2. All pumps have drains located at the bottom of volute for draining.
3. Temperature relief devices located on suction line, liquid line and filter drier of each circuit and have 1/4″ flare connection.
4. Units without a pump package have the same leaving water connection, Y and Z dimensions (entering water), and Pump Discharge X dimensions as units with a pump package.
5. Dimensions are in mm [inches].

	WEIGHT CU/AL lb/kg	MAX WEIGHT CU/AL PUMP lb/kg	WEIGHT CU/CU lb/kg	MAX WEIGHT CU/CU PUMP lb/kg	WEIGHT MCHX lb/kg	MAX WEIGHT MCHX PUMP lb/kg	CENTER OF GRAVITY		PUMP SUCTION (PS)			PUMP DISCHARGE (PD)		
							CGx MM [INCH]	CGy MM [INCH]	X ±.25	Y ±.25	Z ±.25	X ±.25	Y ±.25	Z ±.25
30RB-060	4111 1869	4944 2247	4593 2088	5426 2466	3783 1716	4616 2094	1164 [45.82]	1038 [40.86]	675.6 [26.6]	309.9 [12.2]	353.1 [13.9]	381.0 [15.0]	482.6 [19.0]	188.0 [7.4]
30RB-070	4317 1932	5150 2641	4799 2181	5632 2560	3978 1804	4811 2182	1165 [45.86]	1013 [39.88]	675.6 [26.6]	309.9 [12.2]	353.1 [13.9]	381.0 [15.0]	482.6 [19.0]	188.0 [7.4]

MCHX — Microchannel Condenser Coil

30RB080 AIR-COOLED CHILLER

NOTES:
1. Unit must have clearances as follows:
   Top — Do not restrict.
   Sides and End — 6′ from solid surface.
2. All pumps have drains located at the bottom of volute for draining.
3. Temperature relief devices located on suction line, liquid line and filter drier of each circuit and have 1/4″ flare connection.
4. Units without a pump package have the same leaving water connection, Y and Z dimensions (entering water), and Pump Discharge X dimensions as units with a pump package.
5. Dimensions are in mm [inches].

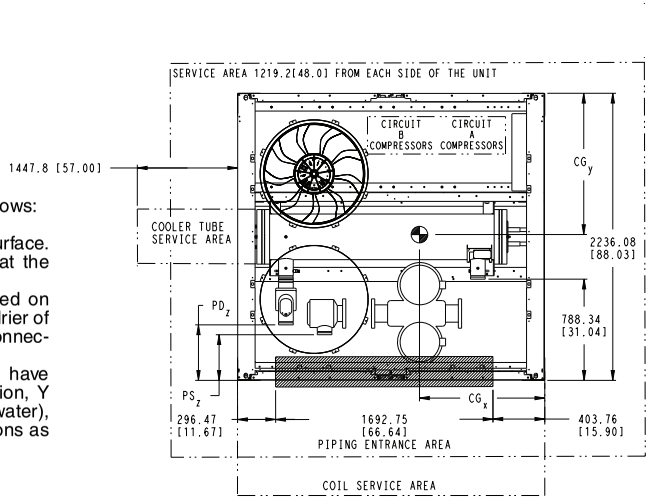

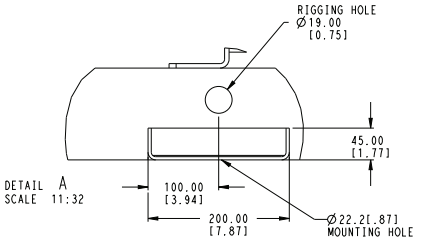

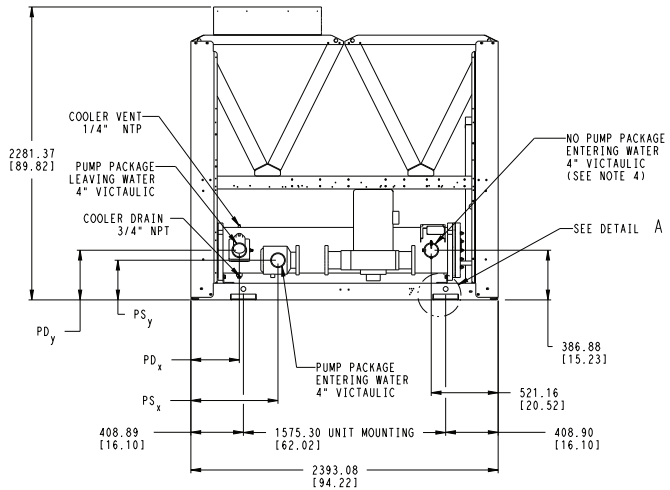

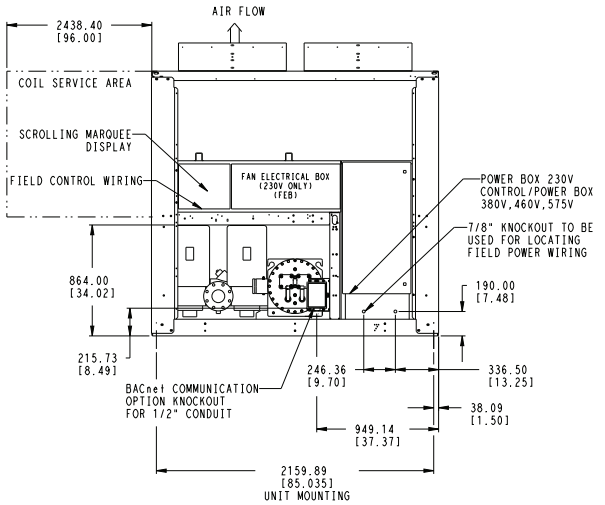

	WEIGHT CU/AL lb/kg	MAX WEIGHT CU/AL PUMP lb/kg	WEIGHT CU/CU lb/kg	MAX WEIGHT CU/CU PUMP lb/kg	WEIGHT MCHX lb/kg	MAX WEIGHT MCHX PUMP lb/kg	CENTER OF GRAVITY		PUMP SUCTION (PS)			PUMP DISCHARGE (PD)		
							CGx MM [INCH]	CGy MM [INCH]	X ±.25	Y ±.25	Z ±.25	X ±.25	Y ±.25	Z ±.25
30RB-080	4600 2091	5523 2511	5082 2310	6005 2730	4267 1934	5190 2355	1206 [47.48]	1012 [39.84]	675.6 [26.6]	309.9 [12.2]	353.1 [13.9]	381.0 [15.0]	497.8 [19.6]	170.2 [6.7]

MCHX — Microchannel Condenser Coil

30RB090, 100 AIR-COOLED CHILLER

NOTES:
1. Unit must have clearances as follows:
   Top — Do not restrict.
   Sides and End — 6′ from solid surface.
2. All pumps have drains located at the bottom of volute for draining.
3. Temperature relief devices located on suction line, liquid line and filter drier of each circuit and have 1/4″ flare connection.
4. Units without a pump package have the same leaving water connection, Y and Z dimensions (entering water), and Pump Discharge X dimensions as units with a pump package.
5. Dimensions are in mm [inches].

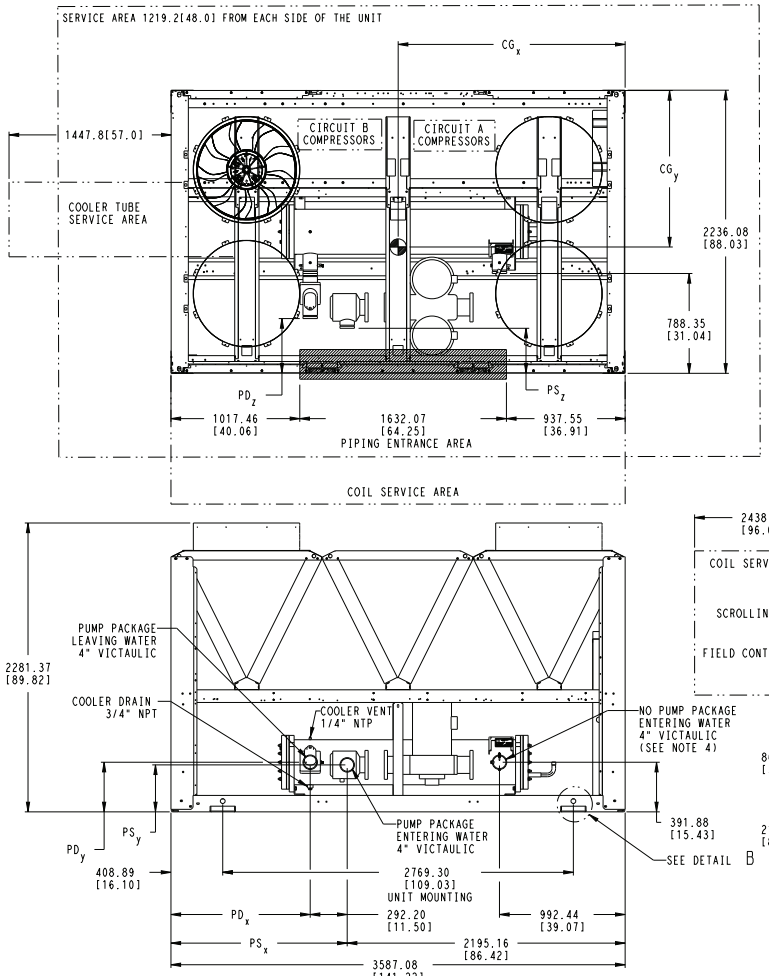

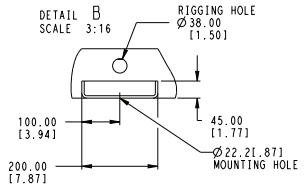

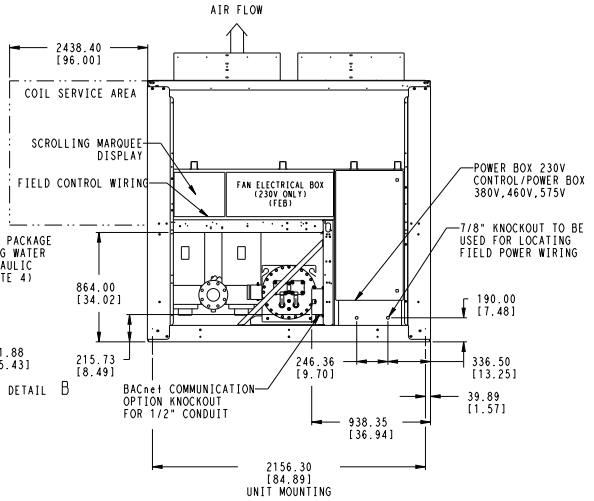

	WEIGHT CU/AL lb/kg	MAX WEIGHT CU/AL PUMP lb/kg	WEIGHT CU/CU lb/kg	MAX WEIGHT CU/CU PUMP lb/kg	WEIGHT MCHX lb/kg	MAX WEIGHT MCHX PUMP lb/kg	CENTER OF GRAVITY CGx MM [INCH]	CGy MM [INCH]	PUMP SUCTION (PS) X ±.25	Y ±.25	Z ±.25	PUMP DISCHARGE (PD) X ±.25	Y ±.25	Z ±.25
30RB-090	5932 2697	6855 3116	6656 3026	7579 3445	5449 2472	6372 2890	1625 [64.0]	1017 [40.0]	1389.4 [54.7]	309.9 [12.2]	353.1 [13.9]	1097.3 [43.2]	497.8 [19.6]	170.2 [6.7]
30RB-100	6155 2798	7078 3217	6879 3127	7802 3547	5663 2569	6586 2987	1614 [63.5]	999 [39.3]	1389.4 [54.7]	309.9 [12.2]	353.1 [13.9]	1097.3 [43.2]	497.8 [19.6]	170.2 [6.7]

MCHX — Microchannel Condenser Coil

Dimensions (cont)

30RB110 AIR-COOLED CHILLER

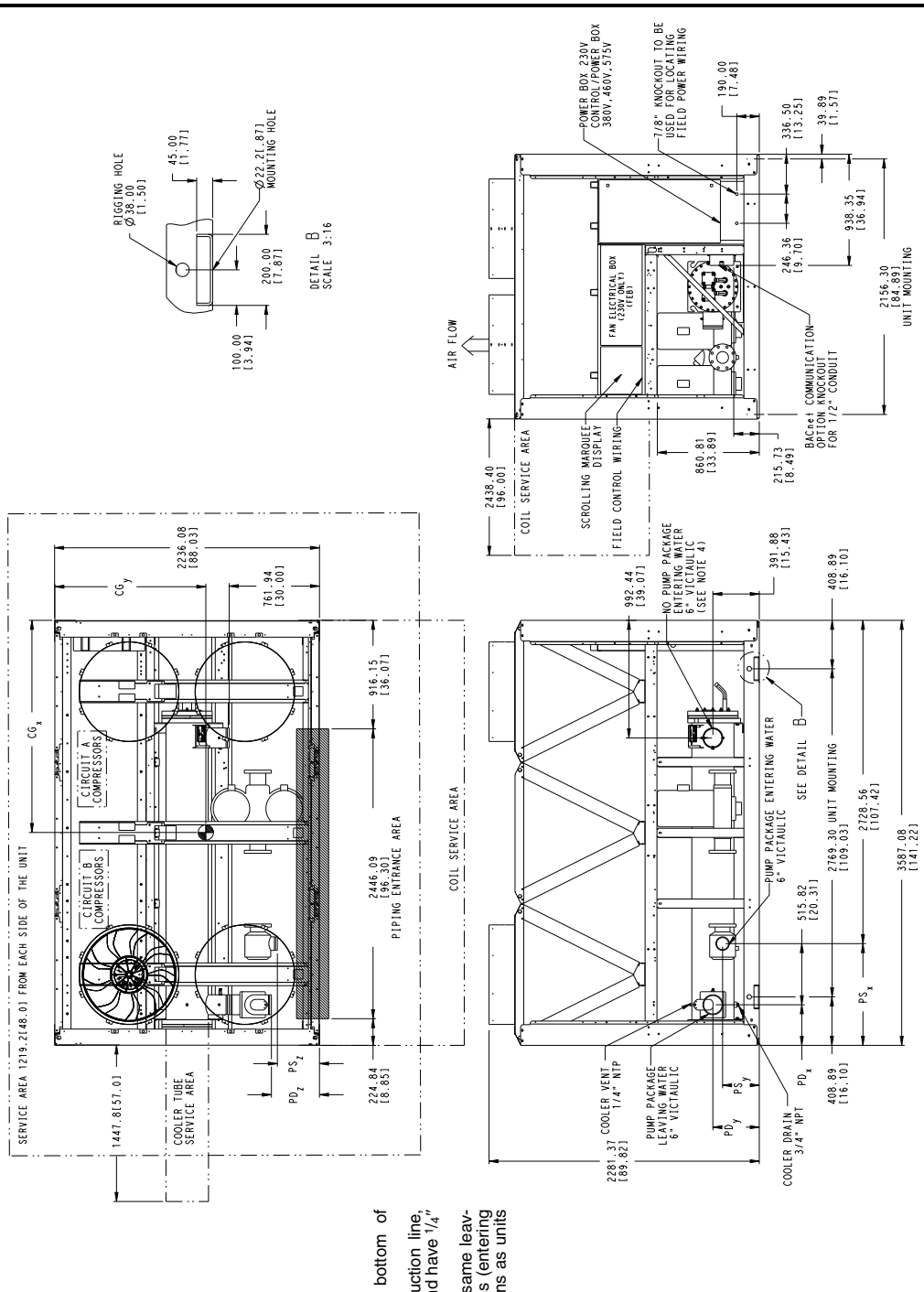

	WEIGHT CU/AL lb/kg	MAX WEIGHT CU/AL PUMP lb/kg	WEIGHT CU/CU lb/kg	MAX WEIGHT CU/CU PUMP lb/kg	WEIGHT MCHX lb/kg	MAX WEIGHT MCHX PUMP lb/kg	CENTER OF GRAVITY CGx MM [INCH]	CGy MM [INCH]	PUMP SUCTION (PS) X ±.25	Y ±.25	Z ±.25	PUMP DISCHARGE (PD) X ±.25	Y ±.25	Z ±.25
30RB 110	6519 2963	7442 3383	7243 3292	8166 3712	6027 2734	6950 3152	1713 [67.44]	997 [39.251]	856.0 [33.7]	281.9 [11.1]	60.9 [2.4]	340.4 [13.4]	391.2 [15.4]	233.7 [9.21]

NOTES:
1. Unit must have clearances as follows:
   Top — Do not restrict.
   Sides and End — 6' from solid surface.
2. All pumps have drains located at the bottom of volute for draining.
3. Temperature relief devices located on suction line, liquid line and filter drier of each circuit and have 1/4" flare connection.
4. Units without a pump package have the same leaving water connection, Y and Z dimensions (entering water), and Pump Discharge X dimensions as units with a pump package.
5. Dimensions are in mm [inches].

MCHX — Microchannel Condenser Coil

30RB120, 130 AIR-COOLED CHILLER

NOTES:
1. Unit must have clearances as follows:
   Top — Do not restrict.
   Sides and End — 6' from solid surface.
   Airflow Side — 8' required for coil service area.
2. All pumps have drains located at the bottom of volute for draining.
3. Temperature relief devices located on suction line, liquid line and filter drier of each circuit and have 1/4" flare connection.
4. Units without a pump package have the same leaving water connection, Y and Z dimensions (entering water), and Pump Discharge X dimensions as units with a pump package.
5. Dimensions are in mm [inches].

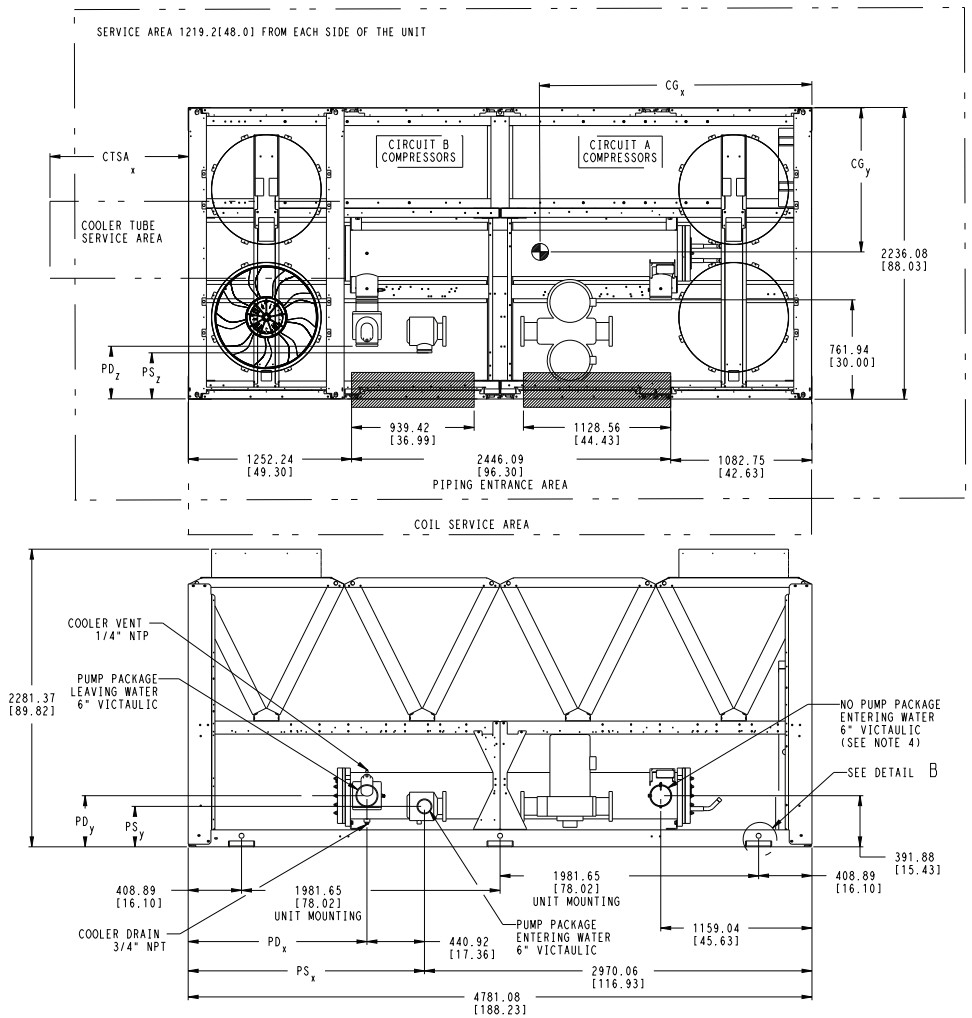

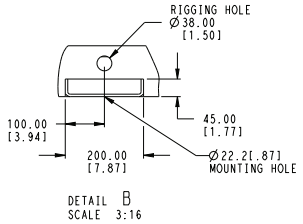

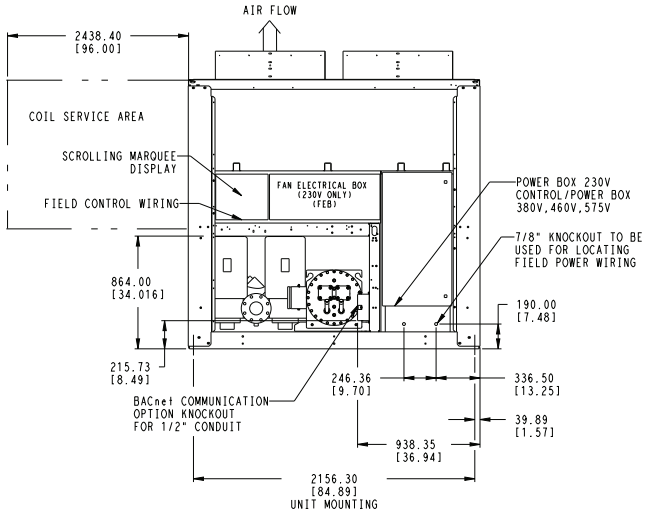

	WEIGHT CU/AL lb/kg	MAX WEIGHT CU/AL PUMP lb/kg	WEIGHT CU/CU lb/kg	MAX WEIGHT CU/CU PUMP lb/kg	WEIGHT MCHX lb/kg	MAX WEIGHT MCHX PUMP lb/kg	CENTER OF GRAVITY CGx MM [INCH]	CENTER OF GRAVITY CGy MM [INCH]	PUMP SUCTION (PS) X ±.25	PUMP SUCTION (PS) Y ±.25	PUMP SUCTION (PS) Z ±.25	PUMP DISCHARGE (PD) X ±.25	PUMP DISCHARGE (PD) Y ±.25	PUMP DISCHARGE (PD) Z ±.25	COOLER TUBE SERVICE AREA CTSA x MM [INCH]
30RB-120	7690 3488	8613 3907	8534 3871	9457 4290	7119 3229	8042 3648	2346 [92.36]	993 [39.09]	1808.5 [71.2]	281.9 [11.1]	60.9 [2.4]	1366.5 [53.8]	391.2 [15.4]	233.7 [9.2]	1447.8 [57.0]
30RB-130	8045 3649	8968 4068	9010 4087	9933 4506	7402 3358	8325 3776	2272 [89.45]	983 [38.70]	1808.5 [71.2]	281.9 [11.1]	60.9 [2.4]	1366.5 [53.8]	391.2 [15.4]	233.7 [9.2]	1447.8 [57.0]

MCHX — Microchannel Condenser Coil

30RB150 AIR-COOLED CHILLER

NOTES:
1. Unit must have clearances as follows:
   Top — Do not restrict.
   Sides and End — 6′ from solid surface.
   Airflow Side — 8' required for coil service area.
2. All pumps have drains located at the bottom of volute for draining.
3. Temperature relief devices located on suction line, liquid line and filter drier of each circuit and have 1/4″ flare connection.
4. Units without a pump package have the same leaving water connection, Y and Z dimensions (entering water), and Pump Discharge X dimensions as units with a pump package.
5. Dimensions are in mm [inches].

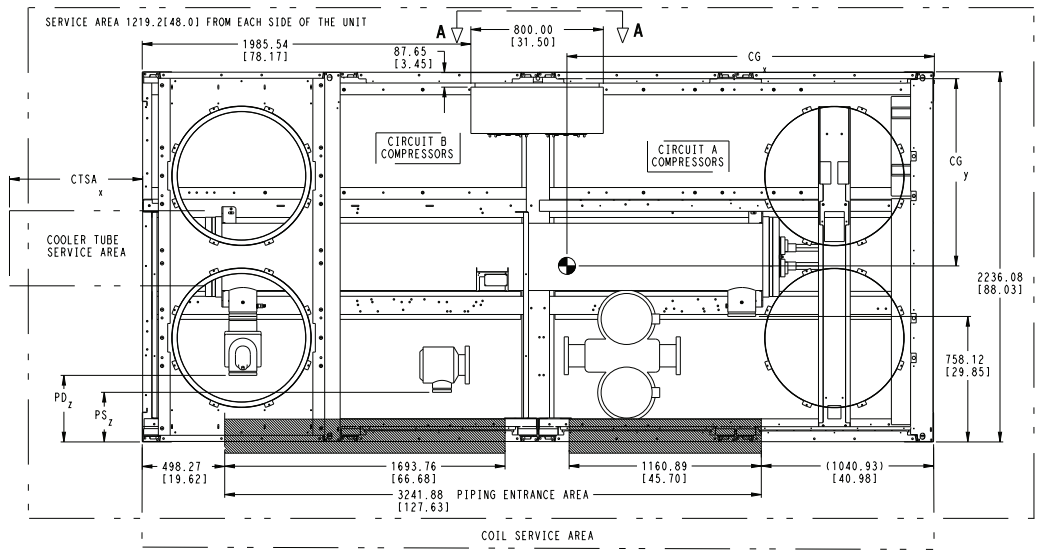

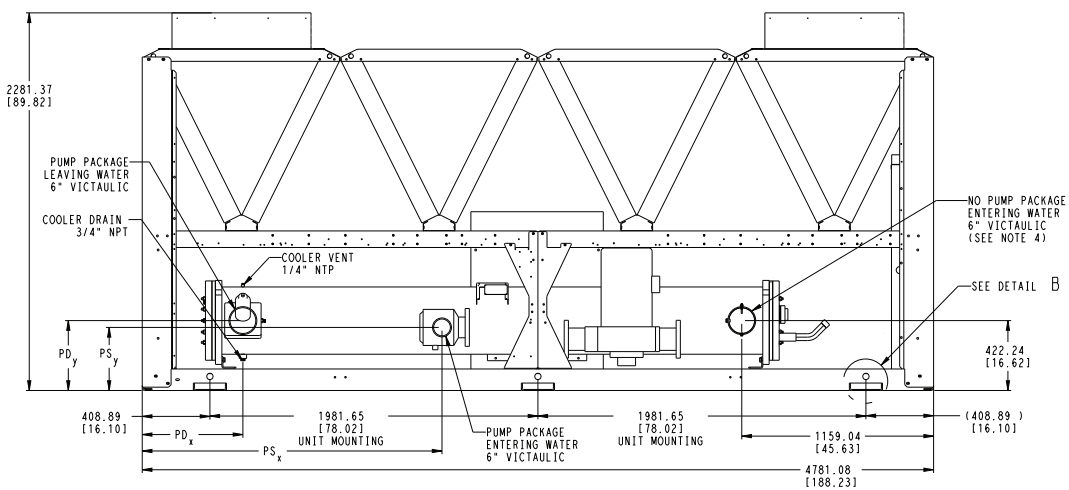

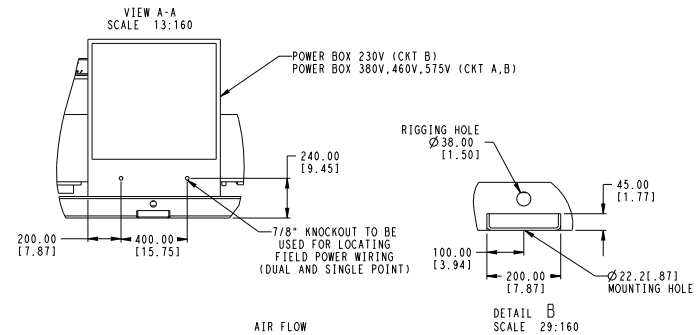

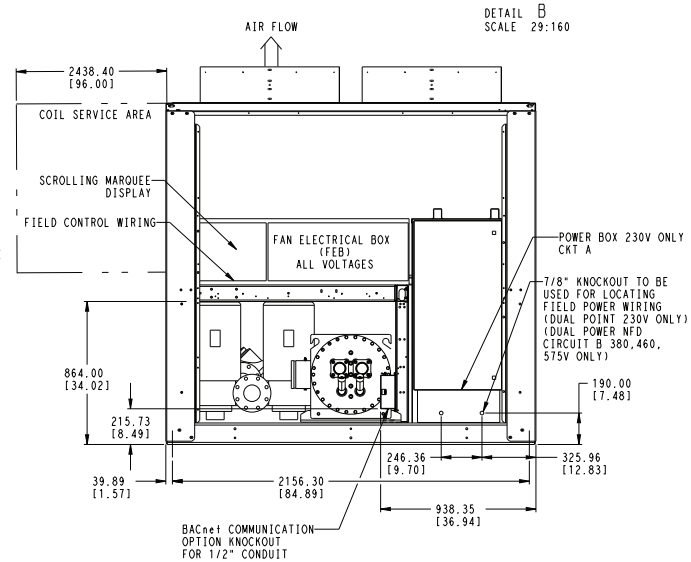

MCHX — Microchannel Condenser Coil

	WEIGHT CU/AL lb/kg	MAX WEIGHT CU/AL PUMP lb/kg	WEIGHT CU/CU lb/kg	MAX WEIGHT CU/CU PUMP lb/kg	WEIGHT MCHX lb/kg	MAX WEIGHT MCHX PUMP lb/kg	CENTER OF GRAVITY CGx MM [INCH]	CENTER OF GRAVITY CGy MM [INCH]	PUMP SUCTION (PS) X ±.25	PUMP SUCTION (PS) Y ±.25	PUMP SUCTION (PS) Z ±.25	PUMP DISCHARGE (PD) X ±.25	PUMP DISCHARGE (PD) Y ±.25	PUMP DISCHARGE (PD) Z ±.25	COOLER TUBE SERVICE AREA CTSA x MM [INCH]
30RB-150	9174 4161	10419 4726	10139 4599	11384 5164	8517 3863	9762 4428	2392 [94.17]	983 [38.70]	1808.5 [71.2]	381 [15.0]	297.2 [11.7]	604.5 [23.8]	421.6 [16.6]	231.1 [9.1]	2905.8 [114.4]

30RB160, 170, 315A/B, 330A/B, 345A/B, 360B AIR-COOLED CHILLER

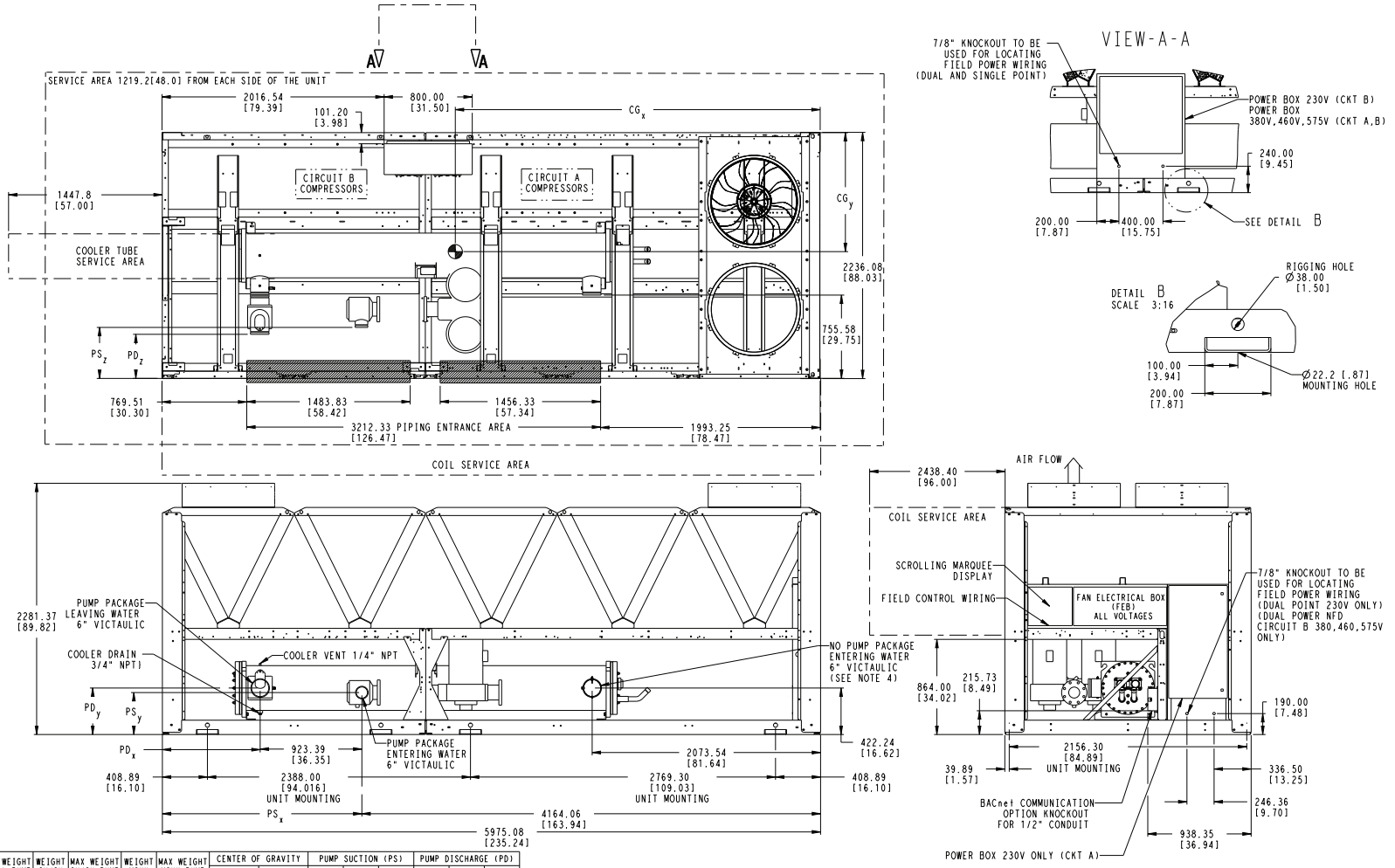

	WEIGHT CU/AL lb/kg	MAX WEIGHT CU/AL PUMP lb/kg	WEIGHT CU/CU lb/kg	MAX WEIGHT CU/CU PUMP lb/kg	WEIGHT MCHX lb/kg	MAX WEIGHT MCHX PUMP lb/kg	CENTER OF GRAVITY		PUMP SUCTION (PS)			PUMP DISCHARGE (PD)		
							CGx MM [INCH]	CGy MM [INCH]	X ±.25	Y ±.25	Z ±.25	X ±.25	Y ±.25	Z ±.25
30RB-160 315A/B,330B	10266 4666	11511 5232	11472 5215	12717 5781	9475 4297	10720 4860	3065 [120.66]	994 [39.13]	1808.48 [71.21]	381 [15.01]	297.2 [11.7]	883.92 [34.8]	421.64 [16.6]	231.14 [9.1]
30RB-170 330A,345A/B,360B	10601 4819	11846 5385	11807 5367	13052 5933	9799 4443	11044 5009	3114 [122.59]	978 [30.5]	1808.48 [71.21]	381 [15.01]	297.2 [11.7]	883.92 [34.8]	421.64 [16.6]	231.14 [9.1]

NOTES:
1. Unit must have clearances as follows:
   Top — Do not restrict.
   Sides and End — 6′ from solid surface.
2. All pumps have drains located at the bottom of volute for draining.
3. Temperature relief devices located on suction line, liquid line and filter drier of each circuit and have 1/4″ flare connection.
4. Units without a pump package have the same leaving water connection, Y and Z dimensions (entering water), and Pump Discharge X dimensions as units with a pump package.
5. Dimensions are in mm [inches].

MCHX — Microchannel Condenser Coil

Dimensions (cont)

30RB190, 360A, 390A/B AIR-COOLED CHILLER

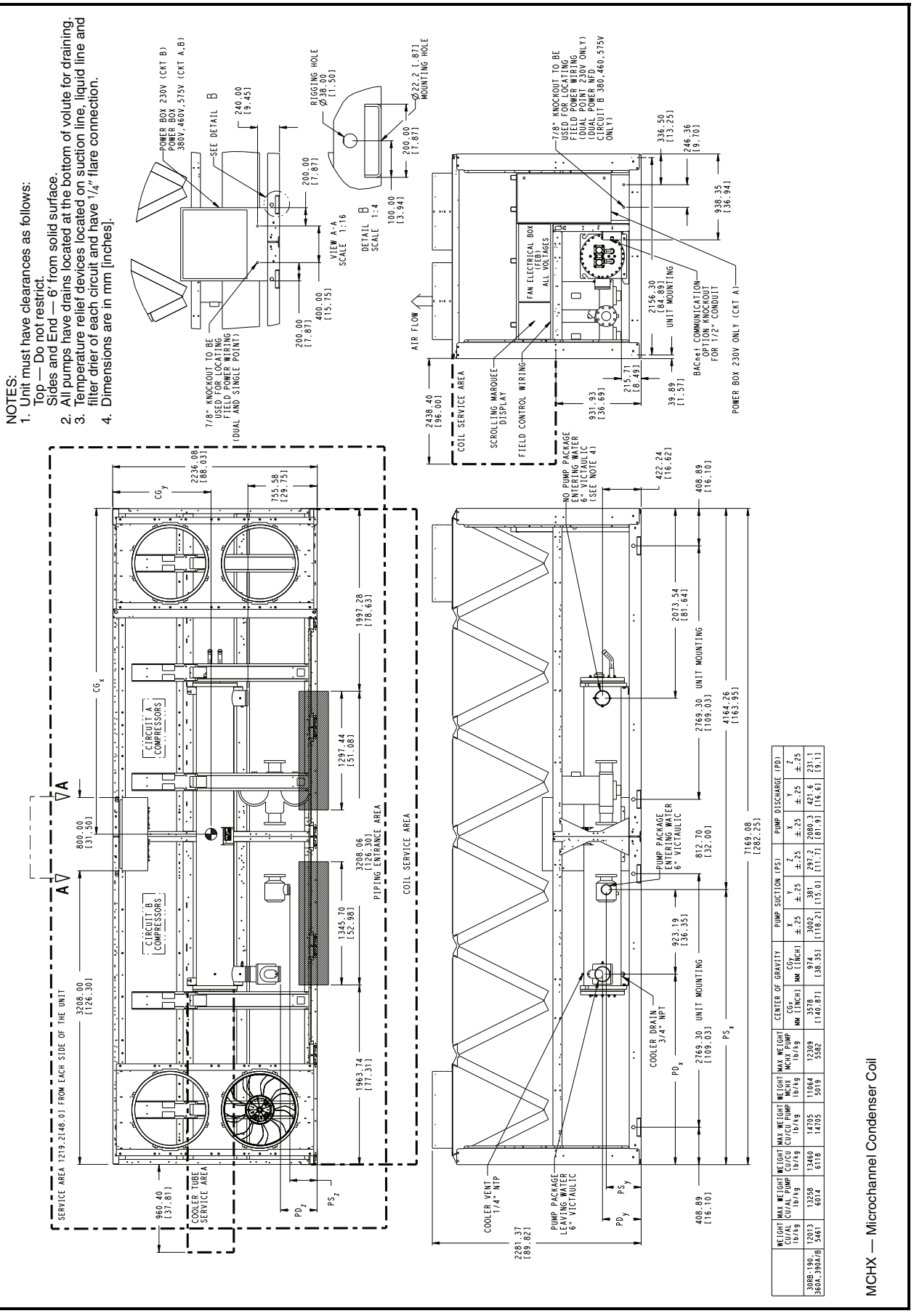

	WEIGHT CU/AL lb/kg	MAX WEIGHT CU/AL PUMP lb/kg	WEIGHT CU/CU lb/kg	MAX WEIGHT CU/CU PUMP lb/kg	WEIGHT MCHX lb/kg	MAX WEIGHT MCHX PUMP lb/kg	CENTER OF GRAVITY		PUMP SUCTION (PS)			PUMP DISCHARGE (PD)		
							CGx MM [INCH]	CGy MM [INCH]	X ±.25	Y ±.25	Z ±.25	X ±.25	Y ±.25	Z ±.25
30RB-190-360A,390A/B	12013 5461	13258 6014	13460 6118	14705 14105	11064 5019	12309 5582	3578 [140.81]	974 [38.35]	3002 [118.2]	381 [15.0]	297.2 [11.7]	2080.3 [81.9]	421.6 [16.6]	231.1 [9.1]

MCHX — Microchannel Condenser Coil

30RB210, 225 AIR-COOLED CHILLER

NOTES:
1. Unit must have clearances as follows:
   Top — Do not restrict.
   Sides and End — 6′ from solid surface.
2. Temperature relief devices located on suction line, liquid line and filter drier of each circuit and have 1/4″ flare connection.
3. Dimensions are in mm [inches].

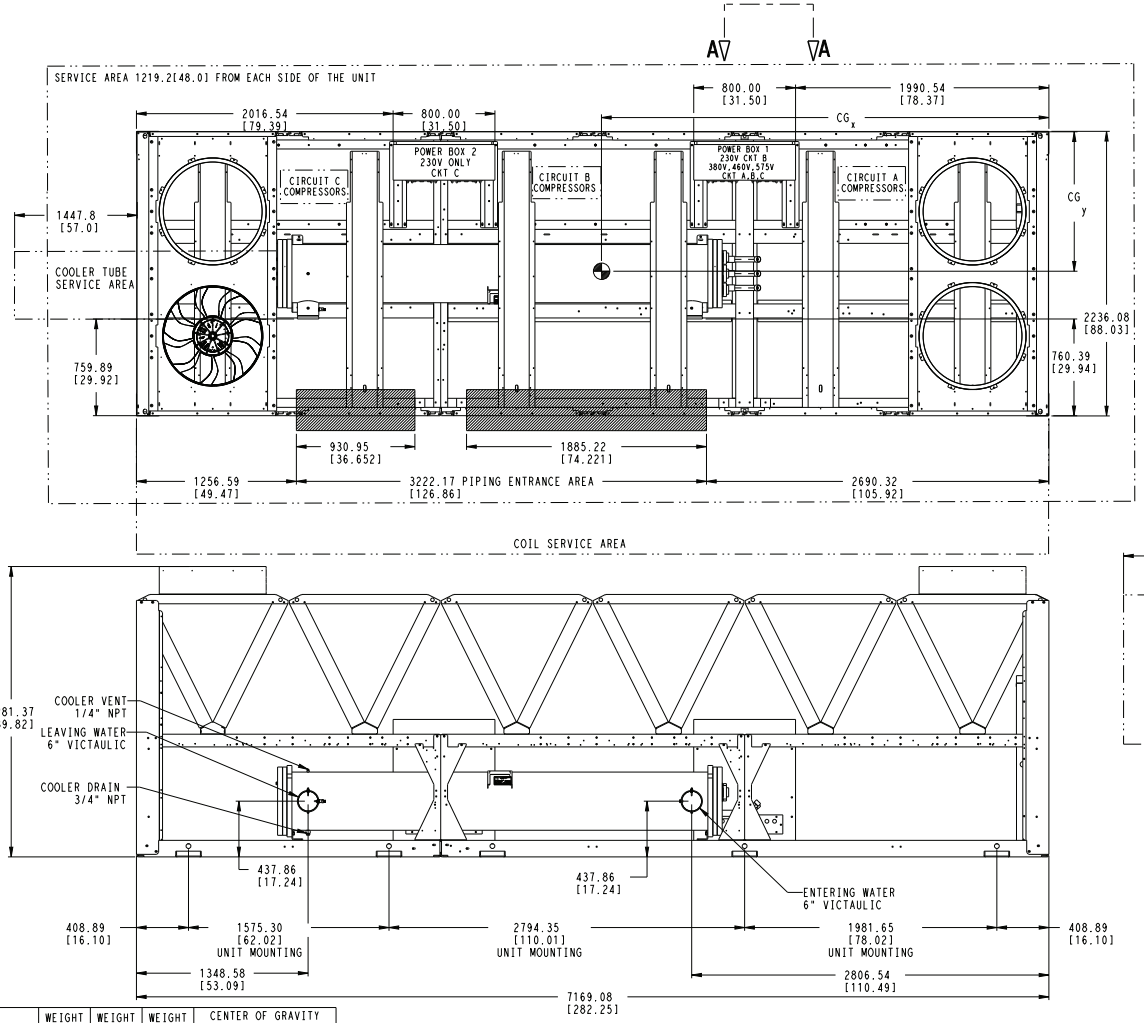

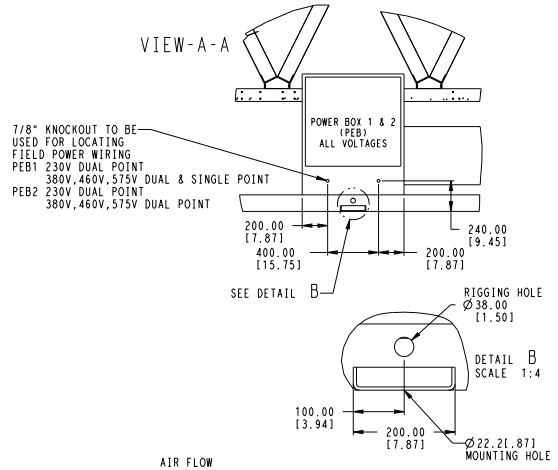

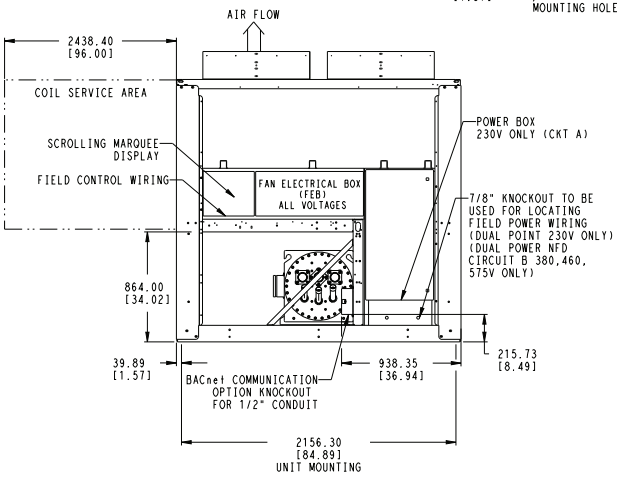

	WEIGHT CU/AL lb/kg	WEIGHT CU/CU lb/kg	WEIGHT MCHX lb/kg	CENTER OF GRAVITY CGx MM [INCH]	CGy MM [INCH]
30RB-210	13734 6243	15181 6901	12772 5793	3528 [138.90]	917 [36.10]
30RB-225	14067 6394	15514 7052	13093 5937	3588 [141.26]	906 [35.67]

MCHX — Microchannel Condenser Coil

Dimensions (cont)

30RB250 AIR-COOLED CHILLER

NOTES:
1. Unit must have clearances as follows:
   Top — Do not restrict.
   Sides and End — 6' from solid surface.
2. Temperature relief devices located on suction line, liquid line and filter drier of each circuit and have 1/4" flare connection.
3. Dimensions are in mm [inches].

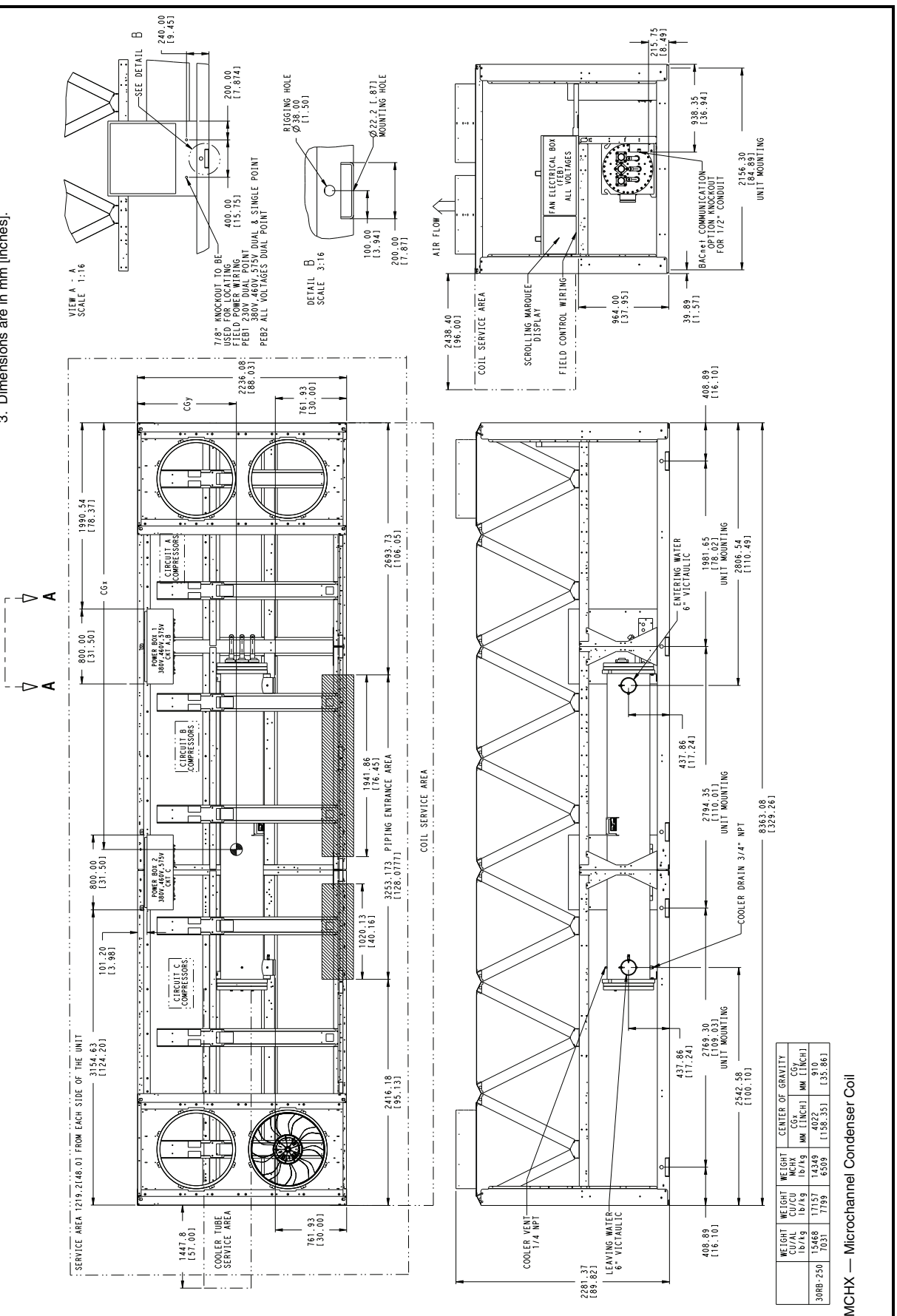

	WEIGHT CU/AL lb/kg	WEIGHT CU/CU lb/kg	WEIGHT MCHX lb/kg	CENTER OF GRAVITY CGx MM [INCH]	CGy MM [INCH]
30RB 250	15468 7031	17157 7799	14349 6509	4022 [158.35]	910 [35.86]

MCHX — Microchannel Condenser Coil

30RB275 AIR-COOLED CHILLER

NOTES:
1. Unit must have clearances as follows:
   Top — Do not restrict.
   Sides and End — 6′ from solid surface.
2. Temperature relief devices located on suction line, liquid line and filter drier of each circuit and have 1/4″ flare connection.
3. Dimensions are in mm [inches].

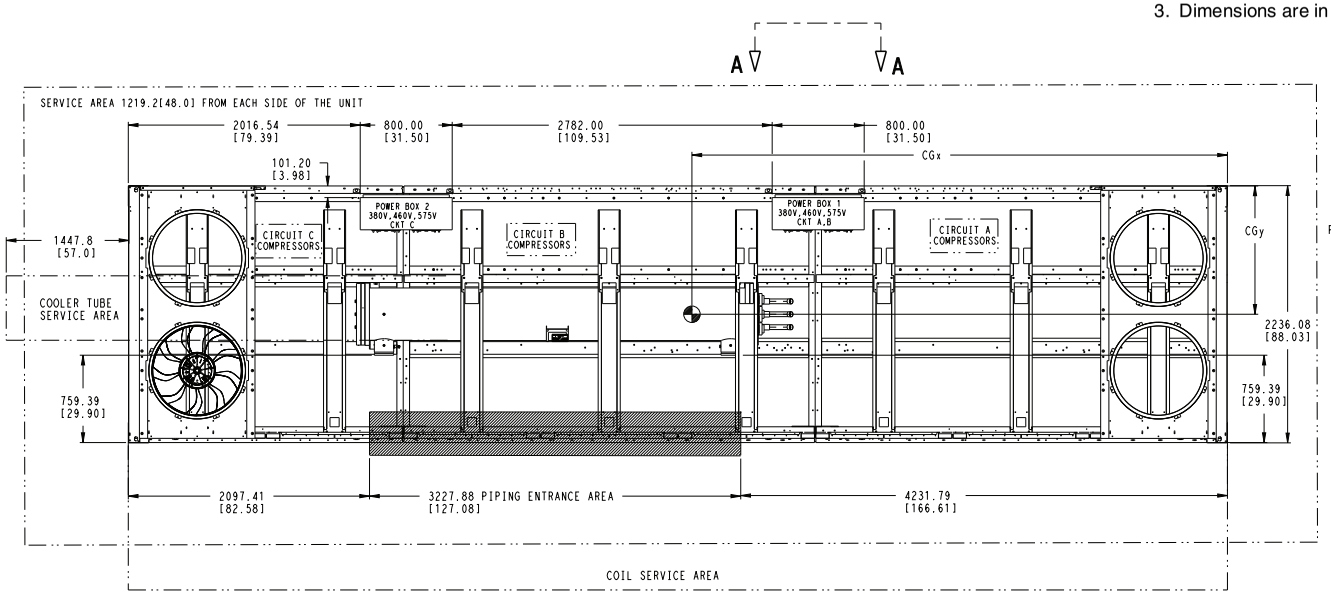

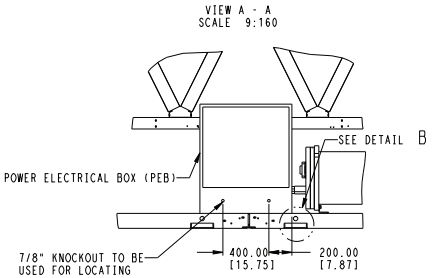

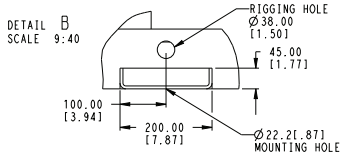

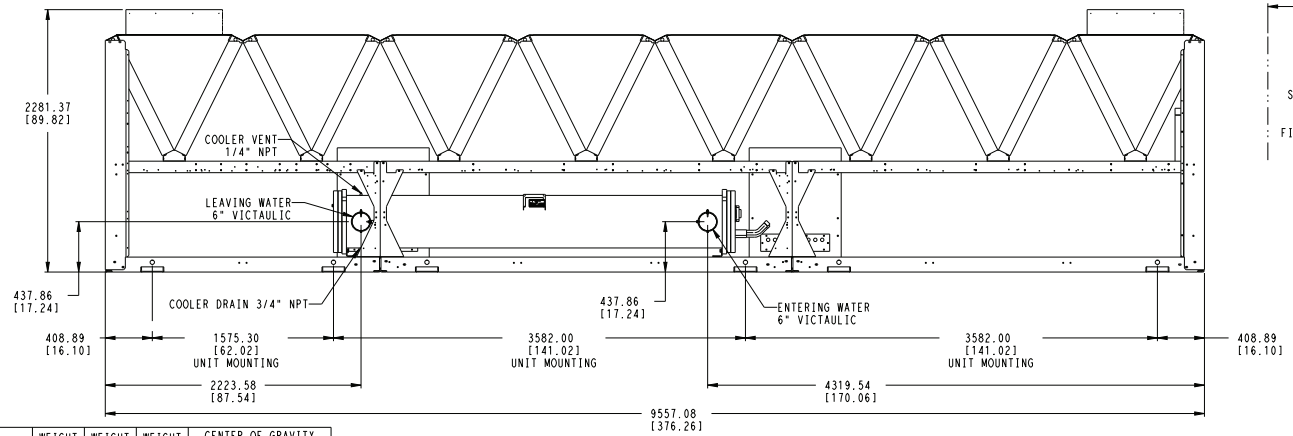

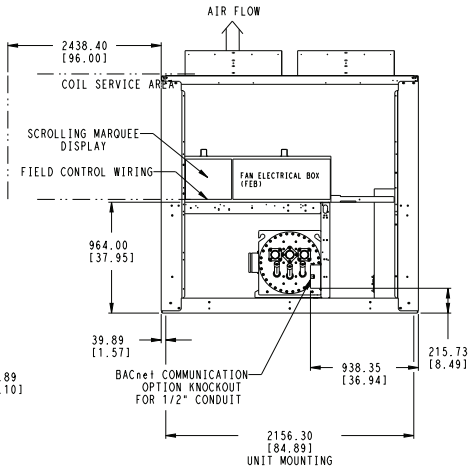

	WEIGHT CU/AL lb/kg	WEIGHT CU/CU lb/kg	WEIGHT MCHX lb/kg	CENTER OF GRAVITY	
				CGx MM [INCH]	CGy MM [INCH]
30RB-275	16915 7689	18845 8566	15647 7096	4857 [191.22]	914 [35.98]

MCHX — Microchannel Condenser Coil

Dimensions (cont)

30RB300 AIR-COOLED CHILLER

NOTES:
1. Unit must have clearances as follows:
   Top — Do not restrict.
   Sides and End — 6' from solid surface.
2. Temperature relief devices located on suction line, liquid line and filter drier of each circuit and have 1/4" flare connection.
3. Dimensions are in mm [inches].

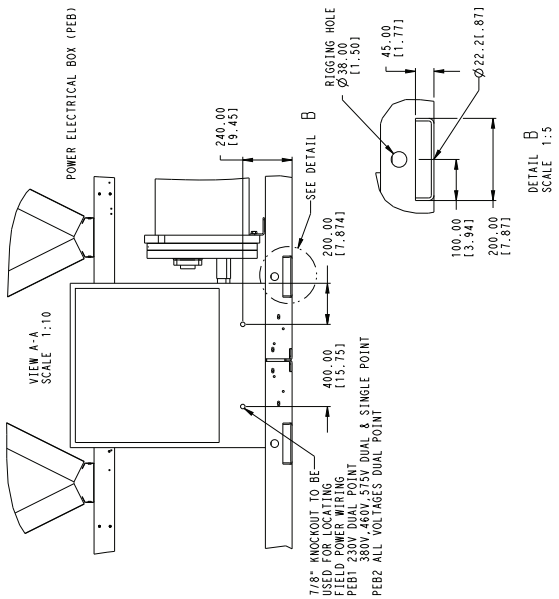

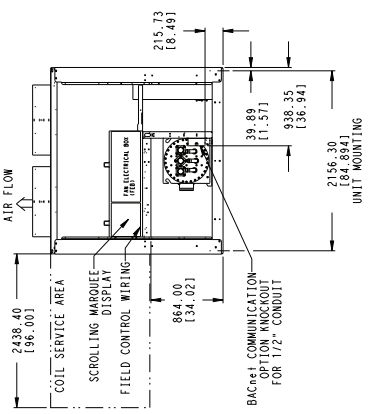

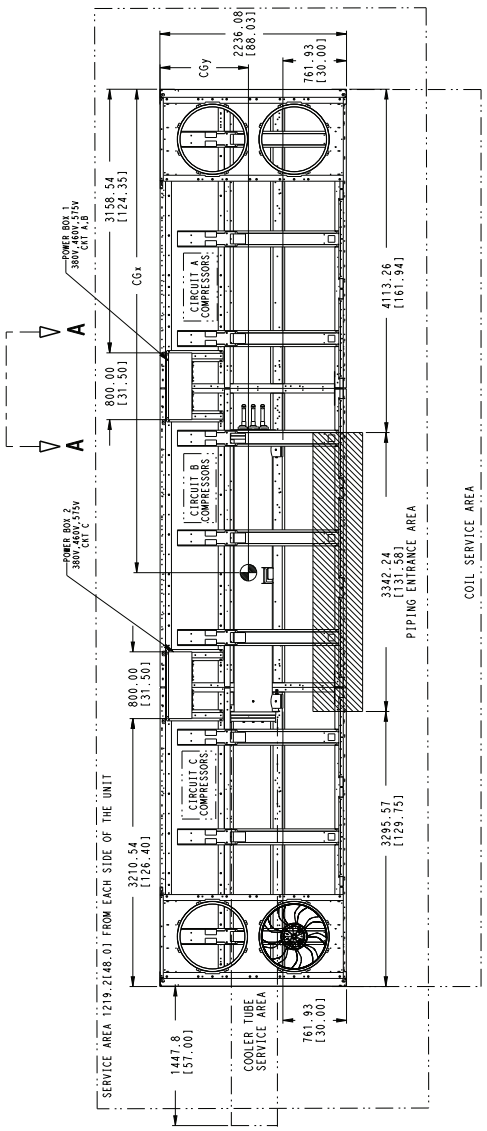

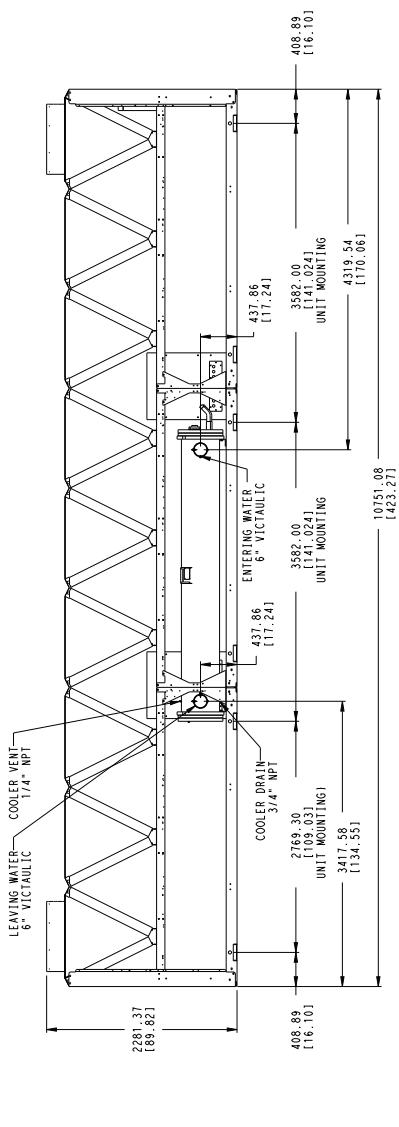

	WEIGHT CU/AL lb/kg	WEIGHT CU/CU lb/kg	WEIGHT MCHX lb/kg	CENTER OF GRAVITY CGx MM [INCH]	CGy MM [INCH]
30RB-300	18306 8321	20477 9308	16893 7659	5317 [203.331]	916 [36.06]

MCHX — Microchannel Condenser Coil

30RB060-080 AIR-COOLED CHILLER WITH OPTIONAL HEAT RECLAIM

NOTES:
1. Unit must have clearances as follows:
   Top — Do not restrict.
   Sides and End — 6′ from solid surface.
2. All pumps have drains located at the bottom of volute for draining.
3. Temperature relief devices located on suction line, liquid line and filter drier of each circuit and have 1/4″ flare connection.
4. Units without a pump package have the same leaving water connection, Y and Z dimensions (entering water), and Pump Discharge X dimensions as units with a pump package.
5. Dimensions are in mm [inches].

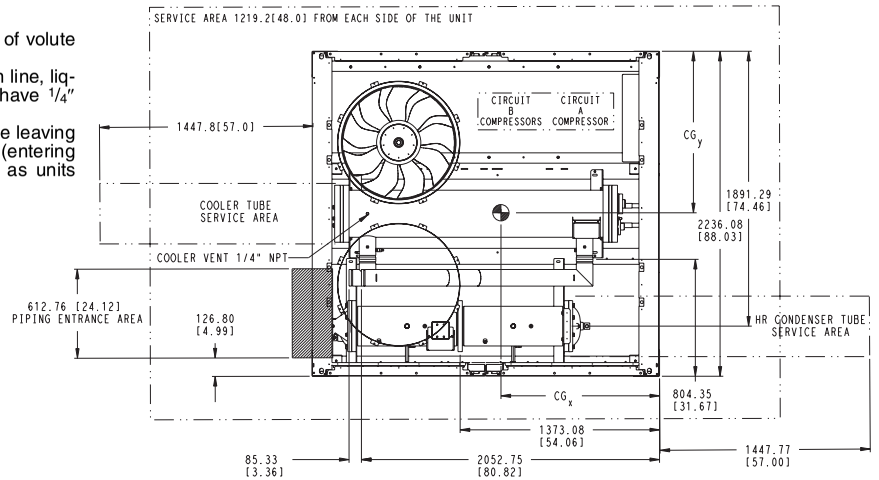

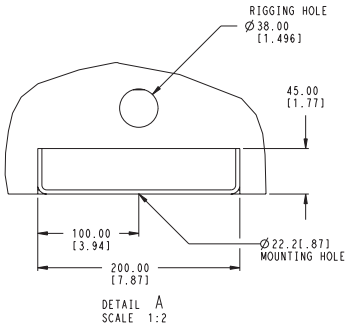

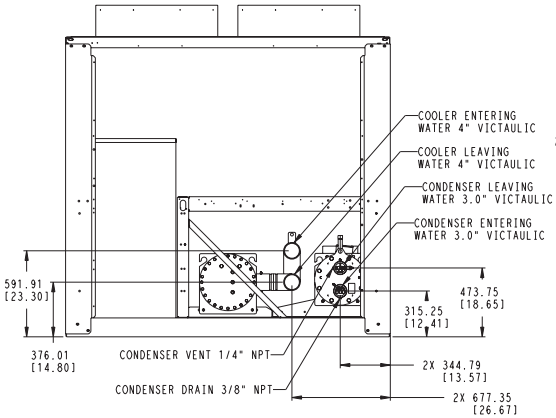

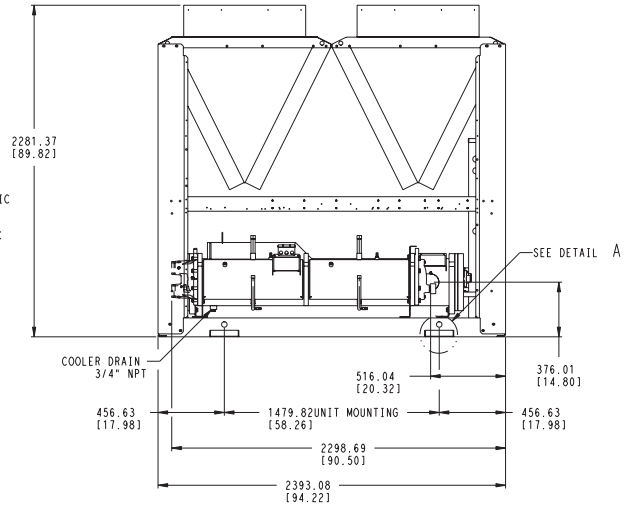

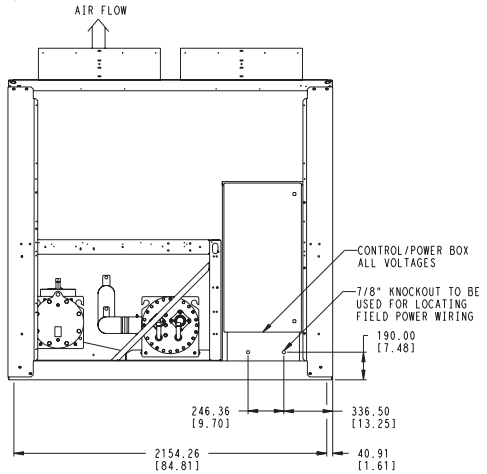

	WEIGHT MCHX lb/kg	CENTER OF GRAVITY CGx MM [INCH]	CGy MM [INCH]
30RB-060	4703 2133	1235 [48.62]	1082 [42.60]
30RB-070	4898 2222	1198 [47.17]	1093 [43.03]
30RB-080	5187 2353	1199 [47.20]	1120 [44.10]

LEGEND

HR — Heat Reclaim
MCHX — Microchannel Condenser Coil

30RB090-110 AIR-COOLED CHILLER WITH OPTIONAL HEAT RECLAIM

NOTES:
1. Unit must have clearances as follows:
   Top — Do not restrict.
   Sides and End — 6′ from solid surface.
2. All pumps have drains located at the bottom of volute for draining.
3. Temperature relief devices located on suction line, liquid line and filter drier of each circuit and have 1/4″ flare connection.
4. Units without a pump package have the same leaving water connection, Y and Z dimensions (entering water), and Pump Discharge X dimensions as units with a pump package.
5. Dimensions are in mm [inches].

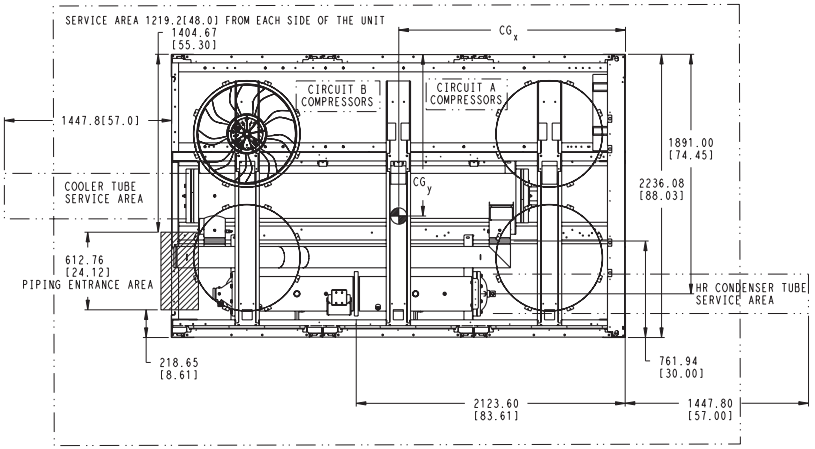

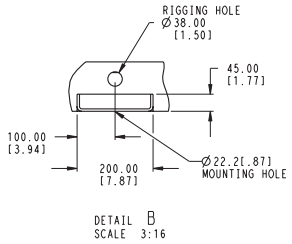

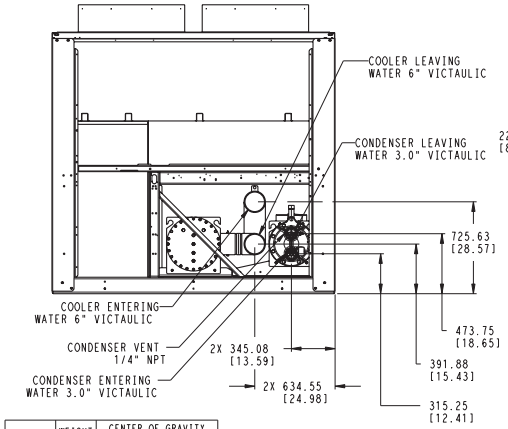

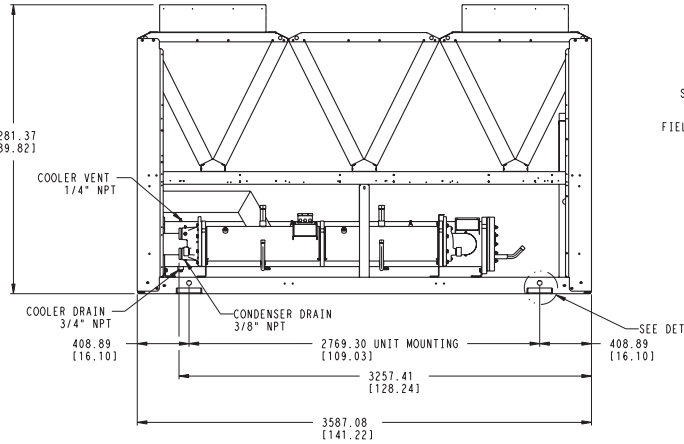

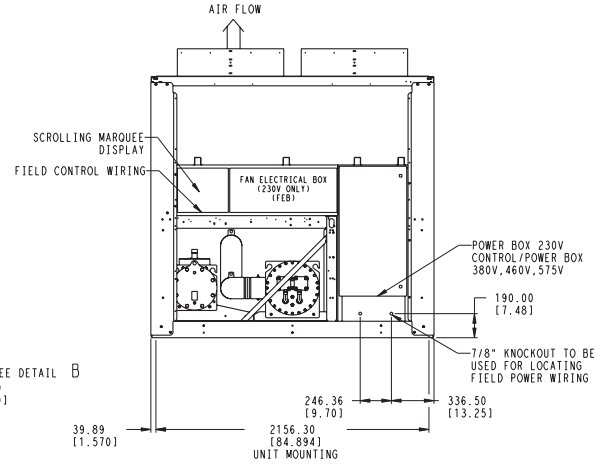

	WEIGHT MCHX lb/kg	CENTER OF GRAVITY CGx MM [INCH]	CGy MM [INCH]
30RB-110	7133 3236	1759 [69.25]	1064 [41.89]
30RB-100	6769 3071	1676 [65.98]	1067 [42.00]
30RB-090	6555 2974	1689 [66.50]	1088 [42.84]

LEGEND

HR — Heat Reclaim
MCHX — Microchannel Condenser Coil

30RB120 AIR-COOLED CHILLER WITH HEAT RECLAIM OPTION

NOTES:
1. Unit must have clearances as follows:
   Top — Do not restrict.
   Sides and End — 6′ from solid surface.
2. All pumps have drains located at the bottom of volute for draining.
3. Temperature relief devices located on suction line, liquid line and filter drier of each circuit and have 1/4″ flare connection.
4. Units without a pump package have the same leaving water connection, Y and Z dimensions (entering water), and Pump Discharge X dimensions as units with a pump package.
5. Dimensions are in mm [inches].

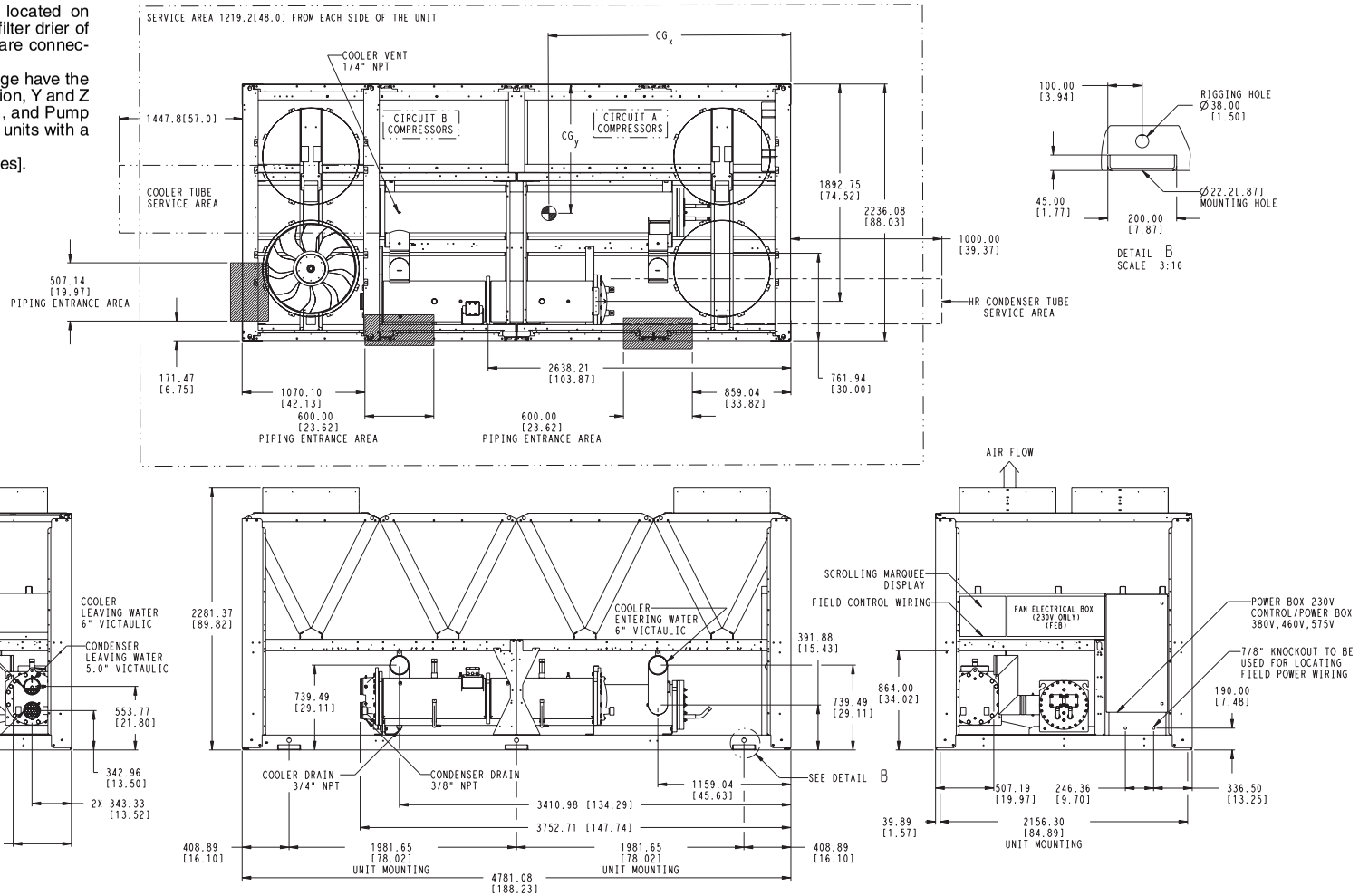

	WEIGHT MCHX lb/kg	CENTER OF GRAVITY CGx MM [INCH]	CGy MM [INCH]
30RB-120	8405 3813	2413 [95.00]	1089 [42.87]

LEGEND

HR — Heat Reclaim
MCHX — Microchannel Condenser Coil

Dimensions (cont)

30RB130 AIR-COOLED CHILLER WITH HEAT RECLAIM OPTION

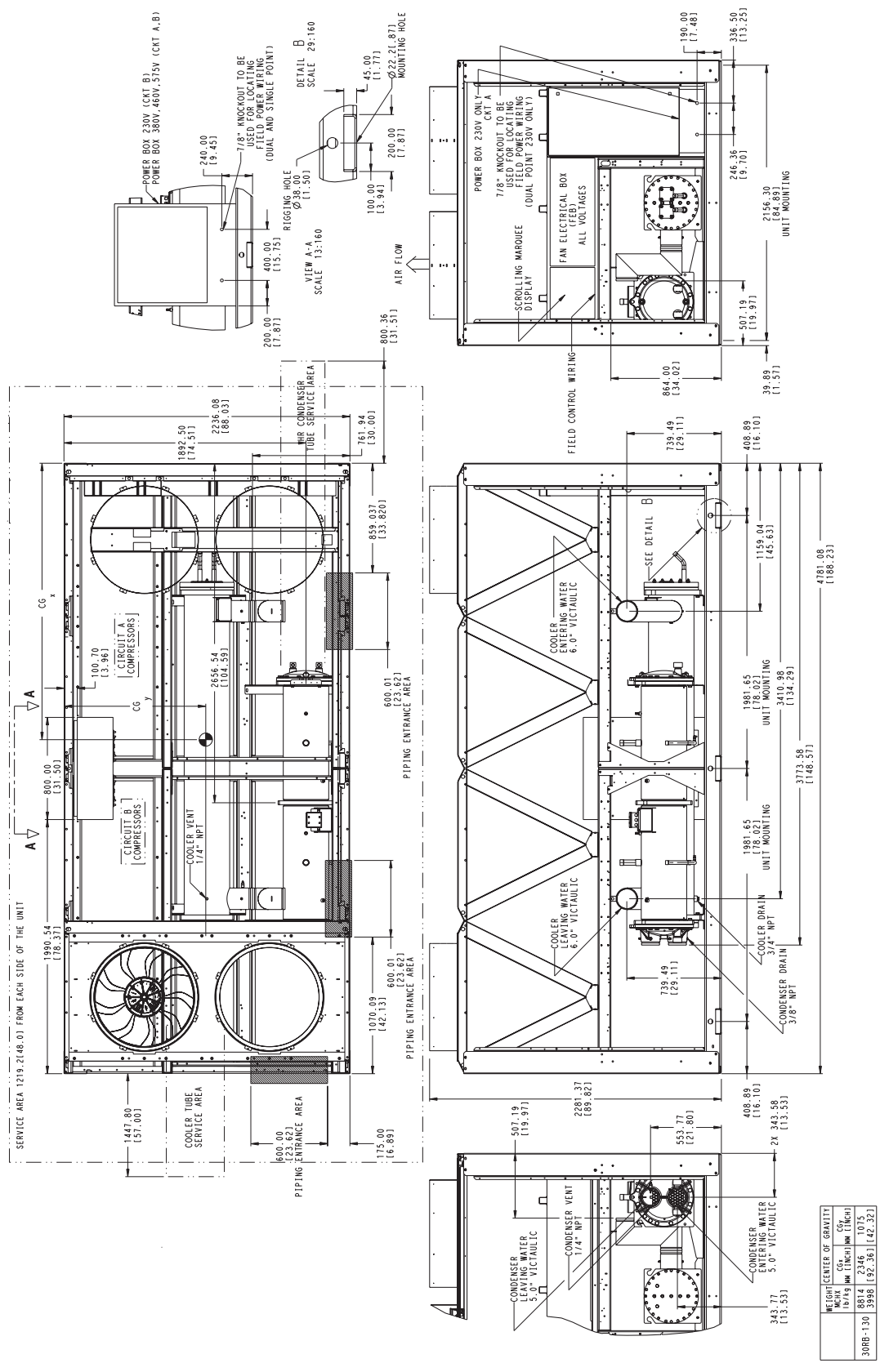

	WEIGHT	CENTER OF GRAVITY	
	MCHX lb/kg	CGx mm [INCH]	CGy mm [INCH]
30RB-130	8814 3998	2346 [92.36]	1075 [42.32]

LEGEND

HR	—	Heat Reclaim
MCHX	—	Microchannel Condenser Coil

NOTES:
1. Unit must have clearances as follows:
   Top — Do not restrict.
   Sides and End — 6' from solid surface.
2. All pumps have drains located at the bottom of volute for draining.
3. Temperature relief devices located on suction line, liquid line and filter drier of each circuit and have 1/4" flare connection.
4. Units without a pump package have the same leaving water connection, Y and Z dimensions (entering water), and Pump Discharge X dimensions as units with a pump package.
5. Dimensions are in mm [inches].

30RB150 AIR-COOLED CHILLER WITH HEAT RECLAIM OPTION

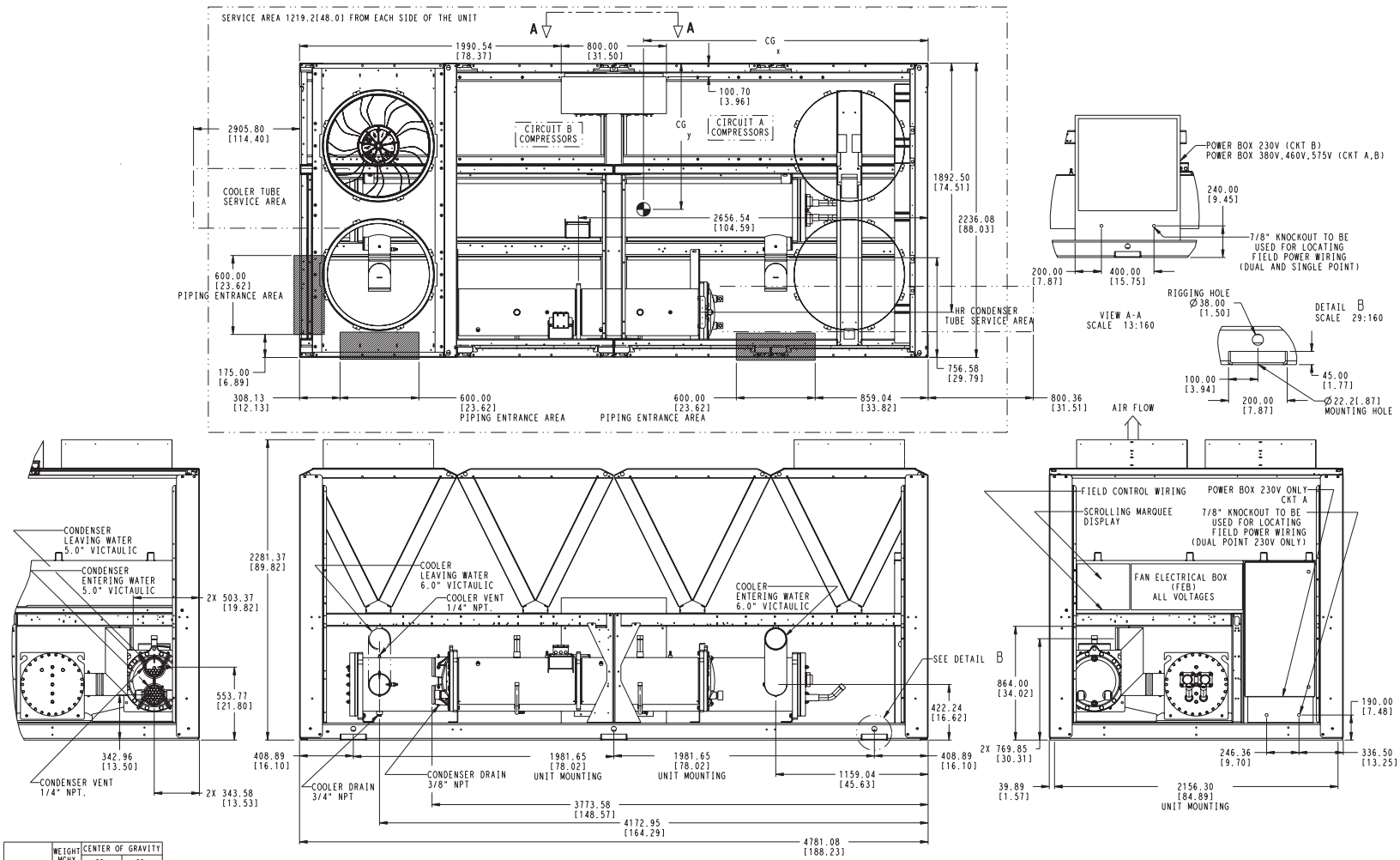

	WEIGHT MCHX lb/kg	CENTER OF GRAVITY CGx MM [INCH]	CGy MM [INCH]
30RB-150	9929 4504	2463 [96.97]	1058 [41.65]

NOTES:
1. Unit must have clearances as follows:
   Top — Do not restrict.
   Sides and End — 6′ from solid surface.
2. All pumps have drains located at the bottom of volute for draining.
3. Temperature relief devices located on suction line, liquid line and filter drier of each circuit and have 1/4″ flare connection.
4. Units without a pump package have the same leaving water connection, Y and Z dimensions (entering water), and Pump Discharge X dimensions as units with a pump package.
5. Dimensions are in mm [inches].

LEGEND

HR — Heat Reclaim
MCHX — Microchannel Condenser Coil

Dimensions (cont)

30RB160,170 AIR-COOLED CHILLER WITH HEAT RECLAIM OPTION

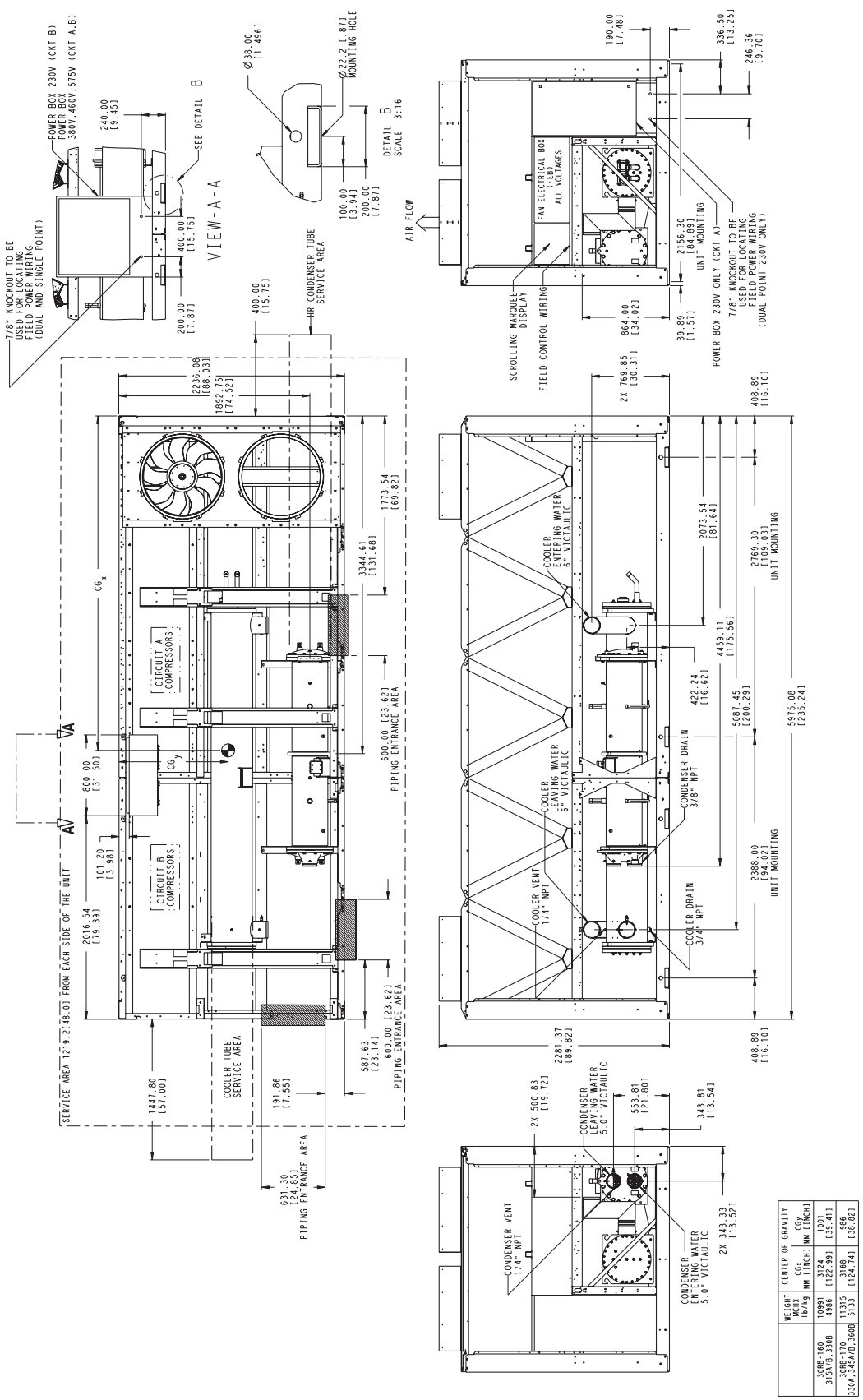

	WEIGHT MCHX lb/kg	CENTER OF GRAVITY CGx MM [INCH]	CGy MM [INCH]
30RB-160 315A/B,330B	10991 4986	3124 [122.99]	1001 [39.41]
30RB-170 330A,345A/B,360B	11315 5133	3168 [124.74]	986 [38.82]

LEGEND

HR	—	Heat Reclaim
MCHX	—	Microchannel Condenser Coil

NOTES:
1. Unit must have clearances as follows:
   Top — Do not restrict.
   Sides and End — 6' from solid surface.
2. All pumps have drains located at the bottom of volute for draining.
3. Temperature relief devices located on suction line, liquid line and filter drier of each circuit and have 1/4" flare connection.
4. Units without a pump package have the same leaving water connection, Y and Z dimensions (entering water), and Pump Discharge X dimensions as units with a pump package.
5. Dimensions are in mm [inches].

30RB190 AIR-COOLED CHILLER WITH HEAT RECLAIM OPTION

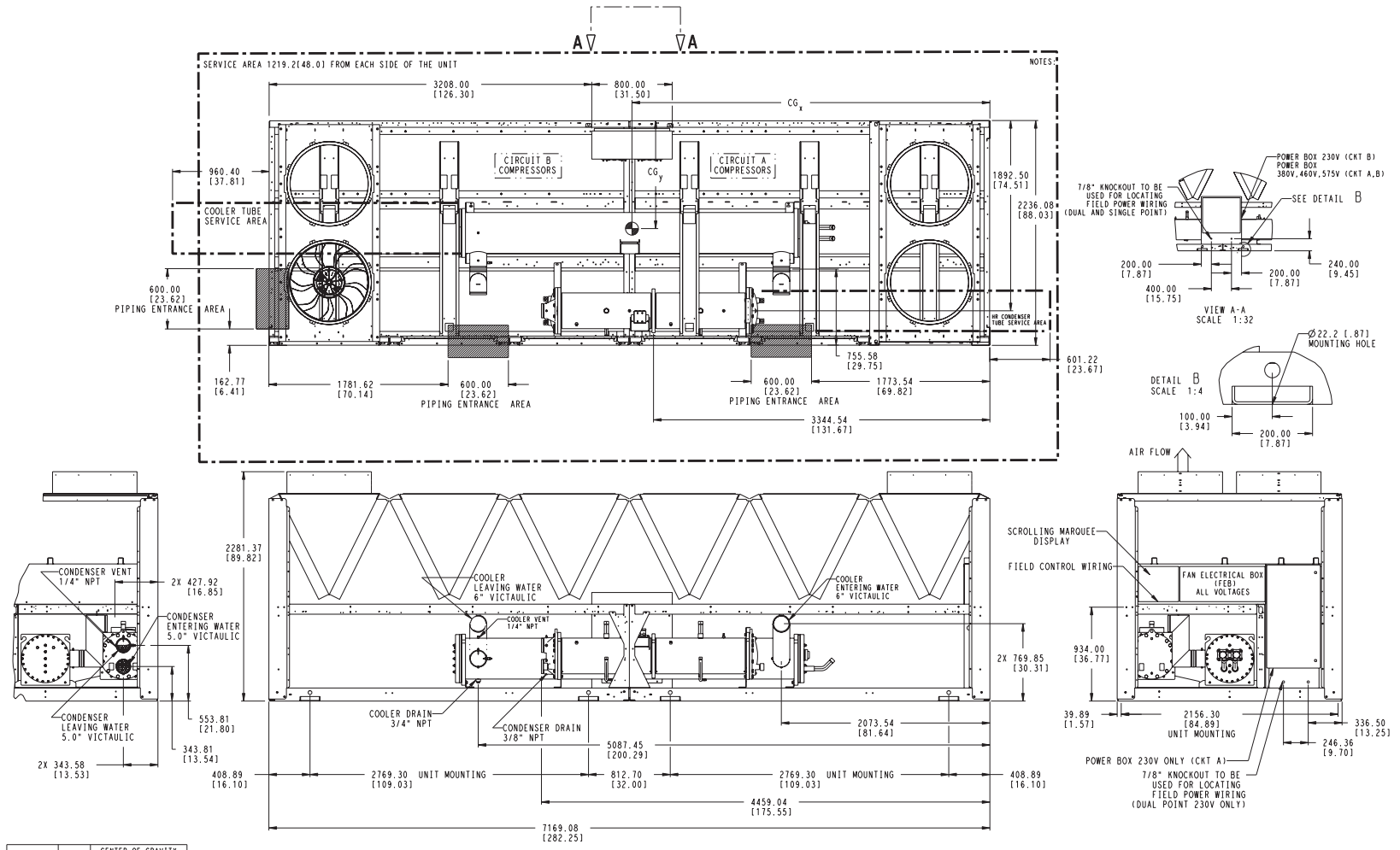

	WEIGHT MCHX	CENTER OF GRAVITY	
	lb/kg	CGx MM [INCH]	CGy MM [INCH]
30RB-190, 360A,390A/B	12850 5706	3566 [140.39]	979 [38.54]

NOTES:
1. Unit must have clearances as follows:
   Top — Do not restrict.
   Sides and End — 6′ from solid surface.
2. All pumps have drains located at the bottom of volute for draining.
3. Temperature relief devices located on suction line, liquid line and filter drier of each circuit and have 1/4″ flare connection.
4. Units without a pump package have the same leaving water connection, Y and Z dimensions (entering water), and Pump Discharge X dimensions as units with a pump package.
5. Dimensions are in mm [inches].

LEGEND

HR — Heat Reclaim
MCHX — Microchannel Condenser Coil

Selection procedure

Carrier's NACO (North American Commericial Operations) Packaged Chiller Builder Program provides quick, easy selection of Carrier's air-cooled liquid chillers. The program considers specific temperature, fluid and flow requirements among other factors such as fouling and altitude corrections.

Before selecting a chiller, consider the following points:

Leaving water (fluid) temperature (LWT)

- If the LWT is less than 40 F (4.4 C), loop freeze protection to a minimum of 30° F (16.6° C) below the LWT set point is required.
- If the LWT is to be between 15 F and 30 F (–9.4 C and –1.1 C) and the unit size is 30RB110-390, then the medium temperature brine option is required. For unit sizes 30RB060-100, operation to as low as 15 F (–9.4 C) is available without the need for the medium temperature brine option.
- If the LWT requirement is greater than 60 F (16 C), a mixing loop is required.

Entering water temperature (EWT)

- If the EWT requirement is greater than 70 F (21.1 C), a mixing loop is required. The EWT cannot exceed 70 F (21.1 C) for extended operation. Pulldown can be accomplished from 95 F (35 C).

Cooler flow rate or cooler delta-T

- The cooler delta-T must fall between 5 and 20° F (3 and 11° C).
- For larger or smaller delta-T applications, a mixing loop is required.
- If the cooler flow is variable, then the rate of change of flow should not exceed 10% per minute. A loop volume of greater than 3 gallons per ton (3.25 L per kW) is recommended.

Cooler pressure drop

- A high cooler pressure drop can be expected when the cooler delta-T is low. A mixing loop can help to alleviate this situation.

Water quality, fouling factor

- Poor water quality can increase the cooler fouling.
- Higher than standard fouling factors lead to lower capacity and higher input kW from a given chiller size compared to running the same application with better quality water (and lower fouling factors).

Operation below 32 F (0° C)

- Low ambient head pressure control is required.
- Consider wind baffles if average wind speed is greater than 5 mph (8 kph).
- Consider higher loop volumes, 6 to 10 gallons per nominal ton (6.5 to 10.75 L per kW).
- Loop freeze protection with glycol is strongly recommended to a minimum of 15° F (8° C) below lowest anticipated ambient temperature.
- Cooler heater option is required if no glycol is used.
- Chilled water pump control is strongly recommended; otherwise override capability is required.
- Consider the remote cooler option. Do not bury refrigerant piping.

Chiller idle below 32 F (0° C)

- Loop freeze protection with glycol is strongly recommended to a minimum of 15° F (8° C) below lowest anticipated ambient temperature.
- Cooler heater option is required if no glycol is used.
- Chilled water pump control is strongly recommended; otherwise override capability is required.
- Drain the cooler — This will require a small amount of glycol for residual water. Cooler heaters (if provided) will need to be disconnected.
- Consider the remote cooler option. Never bury refrigerant lines.

Highest allowable ambient air temperature is 125 F (52 C).

Cooling capacity requirements

- Do not oversize the chillers by more than 15% at design conditions.
- If close capacity control is required below the standard minimum step of unloading, the minimum load control option should be employed.

Coil corrosion requirements

- Coastal application
- Industrial application
- Coastal/industrial application
- Urban application
- Farming

NOTE: See NACO Packaged Chiller Builder and appropriate selection guides for more information.

Chilled water pump external head requirement

Capacity control

- Temperature reset
- Return water reset
- Outside air temperature reset
- Space temperature reset
- 4 to 20 mA temperature reset (requires an energy management module)

Demand limit

- 2-step (requires an energy management module)
- 4 to 20 mA (requires an energy management module)
- CCN loadshed

To select a chiller, use the Packaged Chiller Builder Program or follow one of the procedures starting on page 39.

Optional heat reclaim checklist (project suitability for heat reclaim)

- There must be a simultaneous requirement for chilled water and hot water.
- Hot water temperatures from the heating system must be in the range of 68 to 120 F (20 to 49 C), with hot water flow in the range of 2 to 4 gpm (0.13 to 0.25 L per minute) per heating ton.
- The chilled water load must be in the range of 60 to 190 tons (211.2 to 668.8 kW).
- The hot water load must fall in the range of 770 to 2,650 MBH (1000 Btu per hour) (812 to 2795 nM/hr) per chiller.

NOTE: There is minimal impact on chiller cooling performance and efficiency when the heat reclaim option is

selected. As in all cases, performance data associated with the 30RB heat reclaim chiller is to be determined from the current version of the chiller selection program.

English Example

I Determine 30RB unit size and operating conditions required to meet given capacity at given conditions.

Given:

Capacity . . . . . 126 Tons
Leaving Chilled Water Temp (LCWT) . . . . . .44 F
Cooler Water Temp Rise . . . . . 10° F
Condenser Entering Air Temp . . . . . .95 F
Fouling Factor (Cooler) 0.00010

NOTE: For other than 10° F (5.6° C) temperature rise, unit selection must be made using the chiller program in the electronic catalog.

II From Chiller Ratings table on page 51 and pressure drop curves on page 41, determine operating data for selected unit.

Unit 30RB130
Capacity . . . . . .127.3 Tons
Power Input . . . . . .158.3 kW
Cooler Water Flow . . . . . .304.3 gpm
Pressure Drop . . . . . 12.7 ft of water

SI Example

I Determine unit size and operating conditions required to meet given capacity at given conditions.

Given:

Capacity . . . . . 270 kW
Leaving Chilled Water Temp (LCWT) . . . . . 7 C
Cooler Water Temp Rise . . . . . 5.6° C
Condenser Entering Air Temp . . . . . 35 C
Fouling Factor (Cooler) 0.018

NOTE: For other than approximately 5 to 6° C temperature rise, unit selection must be made using the chiller program in the electronic catalog.

II From Chiller Ratings table on page 54 and pressure drop curves on page 41, determine operating data for selected unit.

Unit 30RB080
Capacity . . . . . .270.3 kW
Power Input . . . . . .95.7 kW
Cooler Water Flow . . . . . .11.6 L/s
Pressure Drop . . . . . 22.4 kPa

Selection procedure (cont)

PUMP IMPELLER SIZES

UNIT 30RB	PUMP Hp	SINGLE PUMP				DUAL PUMP			
		Option Code*	Rpm	Impeller Dia. (in.)	Pump Curve	Option Code*	Rpm	Impeller Dia. (in.)	Pump Curve
060 070	3	0	1750	6.5	I	6	1750	6.5	V
	5	1	1750	7.3	I	7	1750	7.3	V
	7.5	2	1750	8.15	I	8	1750	8.15	V
						9	3450	5.25	VI
	10	3	3450	5.4	II	B	3450	5.9	VI
080 090 100	5	1	1750	7.3	I	7	1750	7.3	V
	7.5	2	1750	8.15	I	8	1750	8.15	V
	10	3	3450	5.4	II	B	3450	5.4	VII
	15	4	3450	6.1	II	C	3450	6.1	VII
110 120 130	5	1	1750	7.3	I	7	1750	7.3	V
	7.5	2	1750	8.15	I	8	1750	8.15	V
	10	3	3450	5.4	II	B	3450	5.4	VII
	15	4	3450	6.1	II	C	3450	6.1	VII
150 160 170 190	5	1	1750	6.5	III	—	—	—	—
	7.5	2	3450	4.6	IV	9	3450	4.5	VIII
	10	3	3450	5.0	IV	B	3450	5.0	VIII
	15	4	3450	5.5	IV	C	3450	5.5	VIII

*Option Code refers to the Hydronics Option (position 11) in the model number. See the 30RB nomenclature on page 4 for option identification.

NOTE: Pump Selections are chiller size dependent. For example, dual pump "C" on a 30RB170 chiller is not the same as dual pump "C" on a 30RB130 chiller. The pump option is not available with optional heat reclaim.

AquaSnap® pump selection

Several pump sizes are available for each AquaSnap chiller size to provide flexibility in matching water system requirements. A dual pump option is also available for primary/standby operation. The Carrier Packaged Chiller Builder Program must be used for pump selection. Pump packages are available in both constant speed and VFD configurations.

NOTE: The pump option is not available with units with optional heat reclaim.

Proper water system design is critical; cooling loads, water pressure drops and proper water line sizing must be accounted for in order to ensure proper system operation. Incorrect or incomplete analysis/design of the water loop could lead to low water flow, loss of water temperature control, and excessive cycling of chiller compressors.

COOLER PRESSURE DROP CURVES

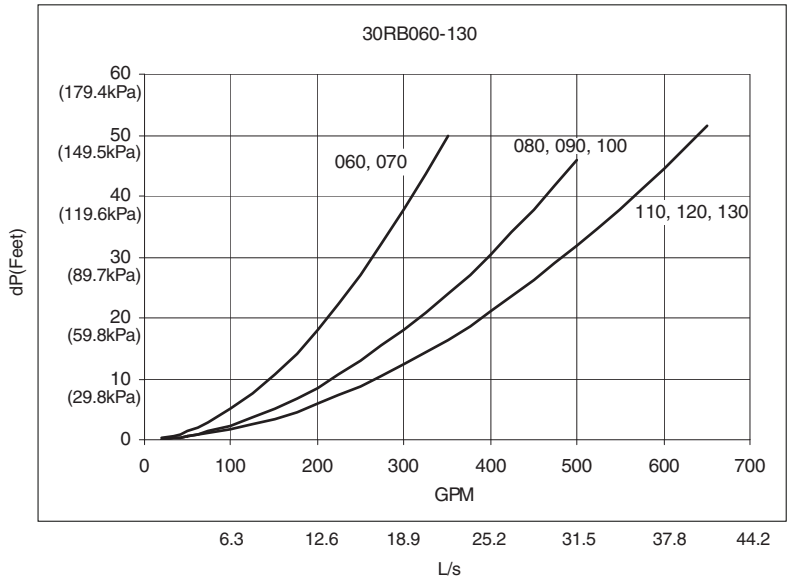

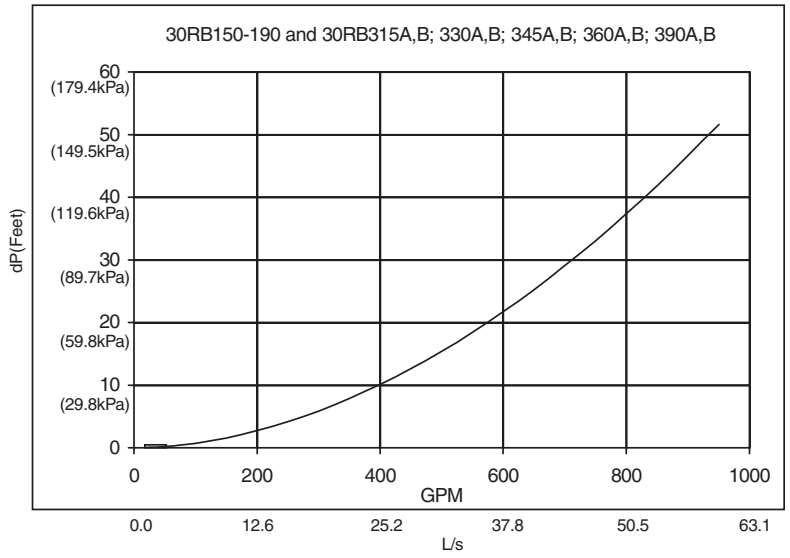

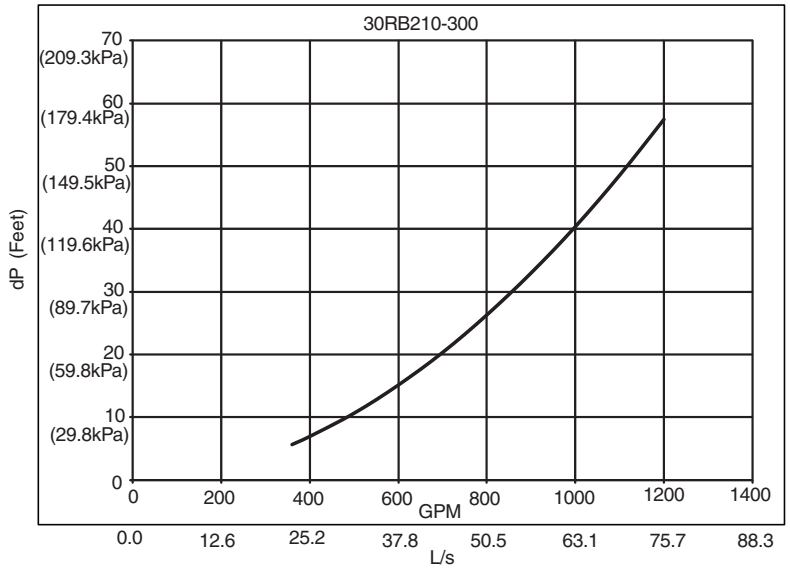

Selection procedure (cont)

OPTIONAL HEAT RECLAIM PRESSURE DROP CURVES

HEAT RECLAIM VESSEL PRESSURE DROP CURVES
30RB 60-110 TON

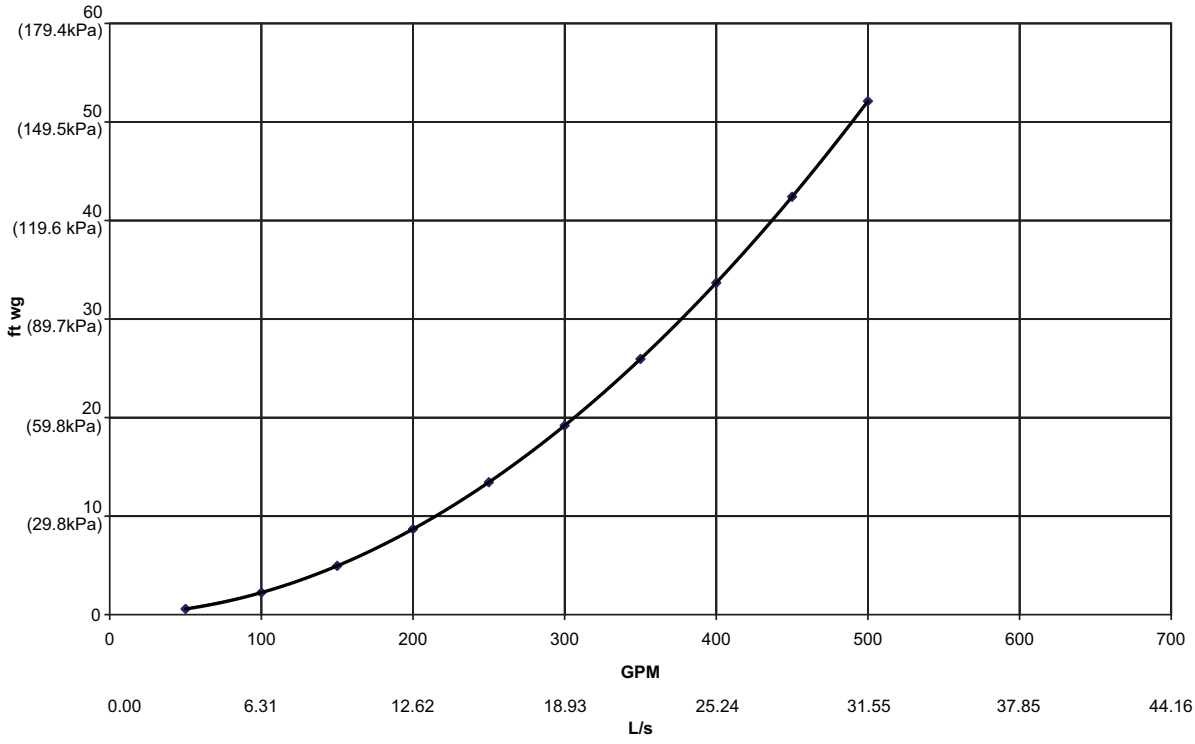

HEAT RECLAIM VESSEL PRESSURE DROP CURVES
30RB 120-190 TON

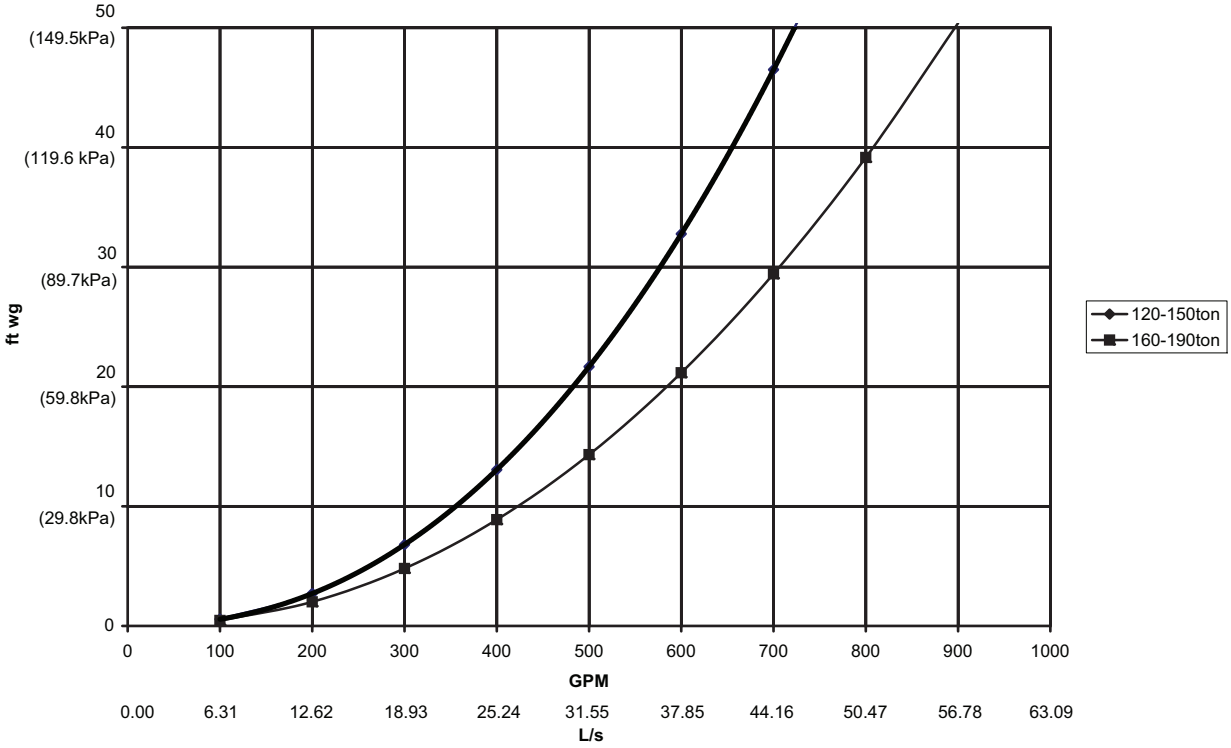

PUMP CURVE I FOR HYDRONIC PACKAGE SINGLE PUMP (Fresh Water)

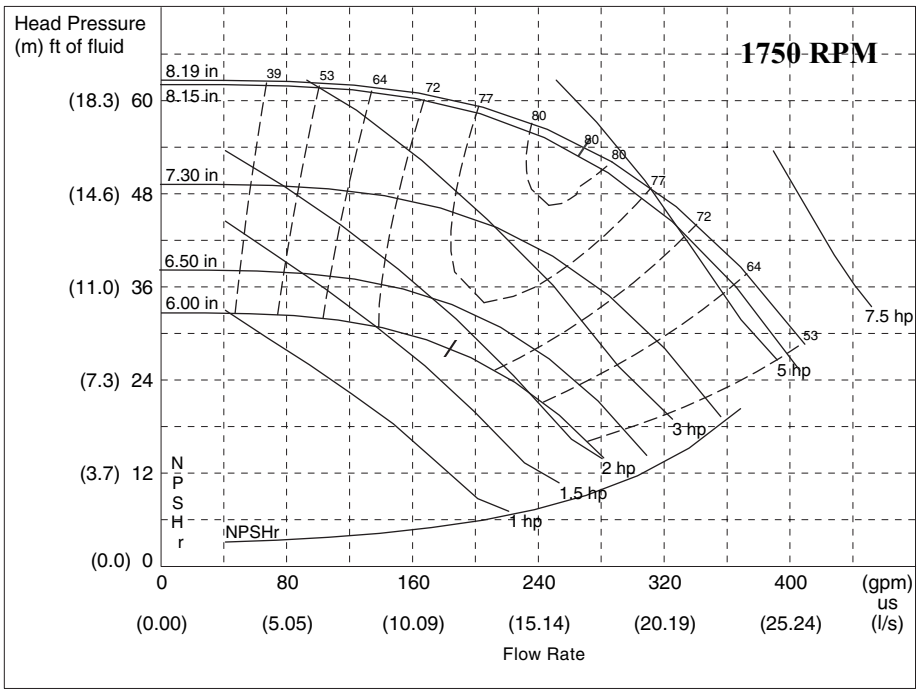

LEGEND

NPSHr — Net Positive Suction Head (Pressure) Required

NOTE: Refer to the 30RB nomenclature on page 4 for option identification. Refer to the Pump Impeller Sizes table on page 40 for more information.

PUMP CURVE II FOR HYDRONIC PACKAGE SINGLE PUMP (Fresh Water)

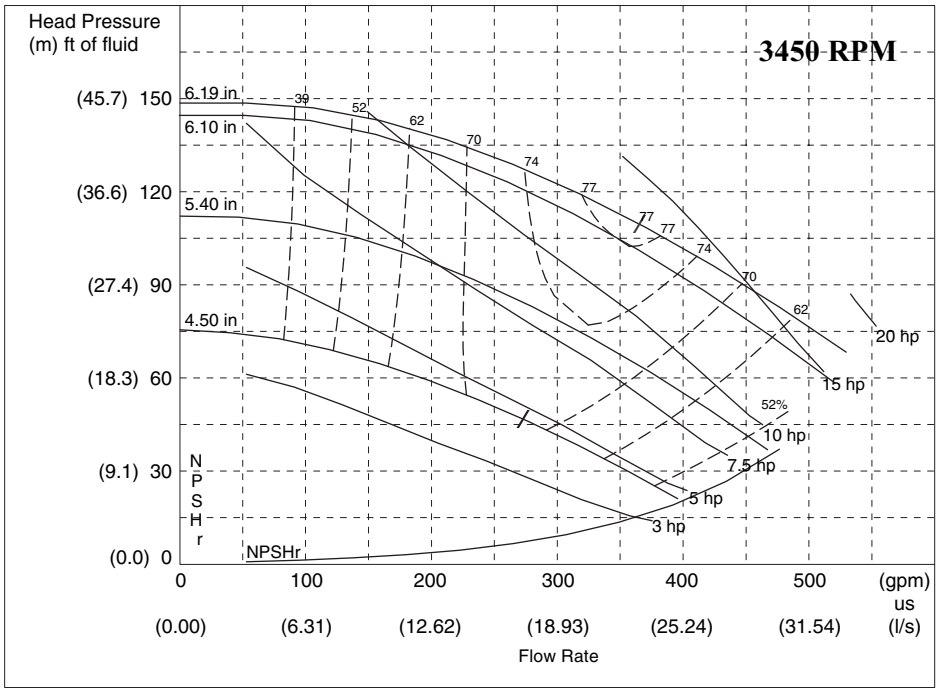

LEGEND

NPSHr — Net Positive Suction Head (Pressure) Required

NOTE: Refer to the 30RB nomenclature on page 4 for option identification. Refer to the Pump Impeller Sizes table on page 40 for more information.

Selection procedure (cont)

PUMP CURVE III FOR HYDRONIC PACKAGE SINGLE PUMP (Fresh Water)

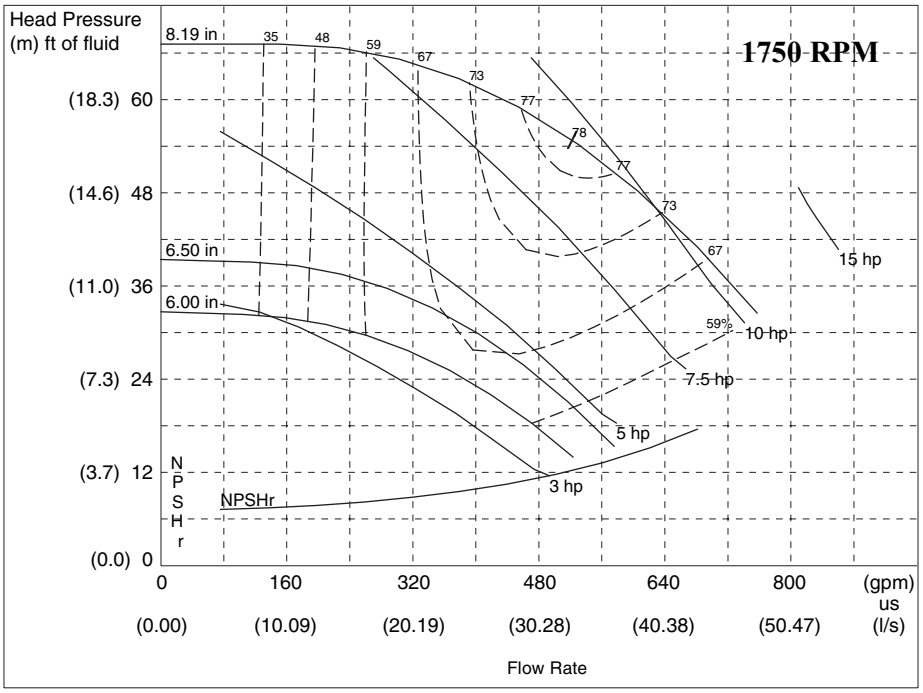

LEGEND

NPSHr — Net Positive Suction Head (Pressure) Required

NOTE: Refer to the 30RB nomenclature on page 4 for option identification. Refer to the Pump Impeller Sizes table on page 40 for more information.

PUMP CURVE IV FOR HYDRONIC PACKAGE SINGLE PUMP (Fresh Water)

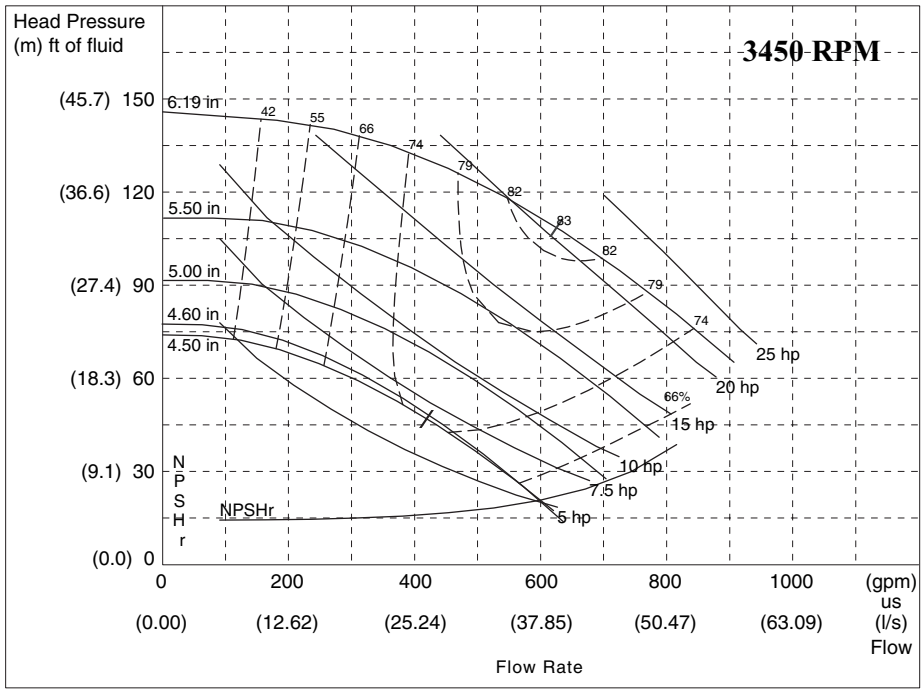

LEGEND

NPSHr — Net Positive Suction Head (Pressure) Required

NOTE: Refer to the 30RB nomenclature on page 4 for option identification. Refer to the Pump Impeller Sizes table on page 40 for more information.

PUMP CURVE V FOR HYDRONIC PACKAGE DUAL PUMP (Fresh Water)

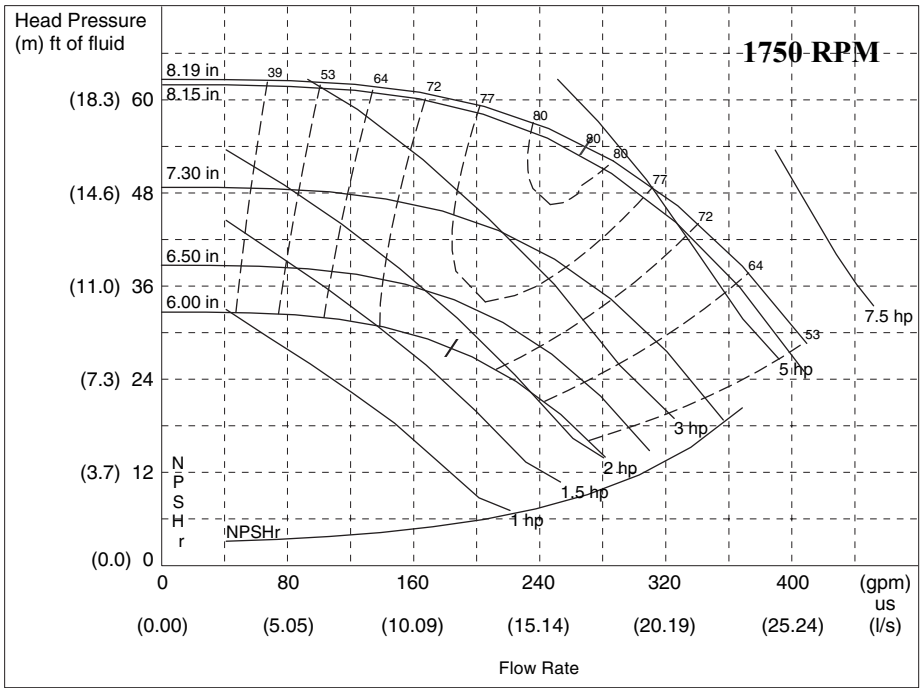

LEGEND

NPSHr — Net Positive Suction Head (Pressure) Required

NOTE: Refer to the 30RB nomenclature on page 4 for option identification. Refer to the Pump Impeller Sizes table on page 40 for more information.

PUMP CURVE VI FOR HYDRONIC PACKAGE DUAL PUMP (Fresh Water)

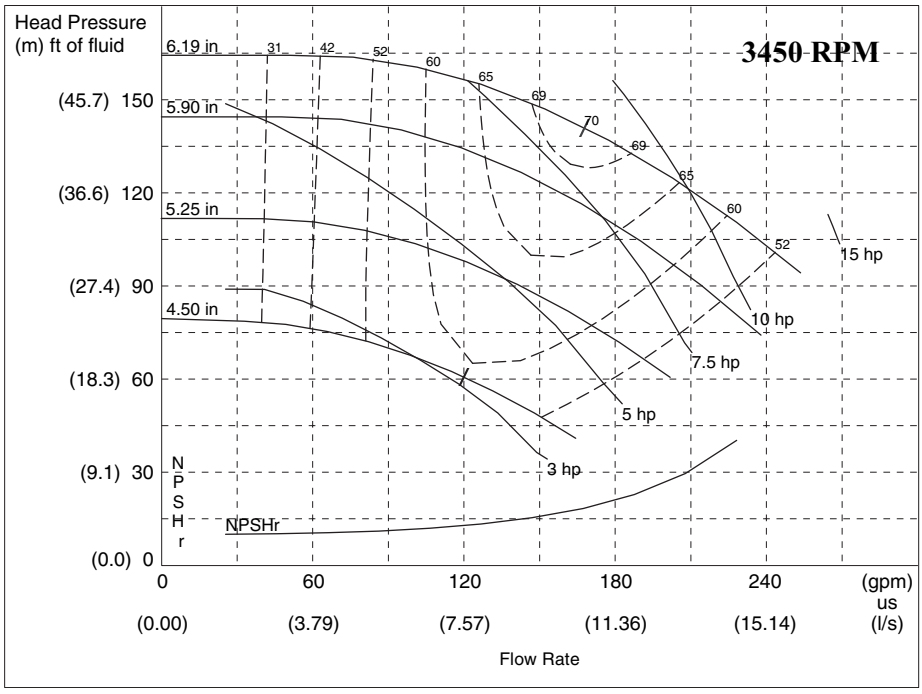

LEGEND

NPSHr — Net Positive Suction Head (Pressure) Required

NOTE: Refer to the 30RB nomenclature on page 4 for option identification. Refer to the Pump Impeller Sizes table on page 40 for more information.

Selection procedure (cont)

PUMP CURVE VII FOR HYDRONIC PACKAGE DUAL PUMP (Fresh Water)

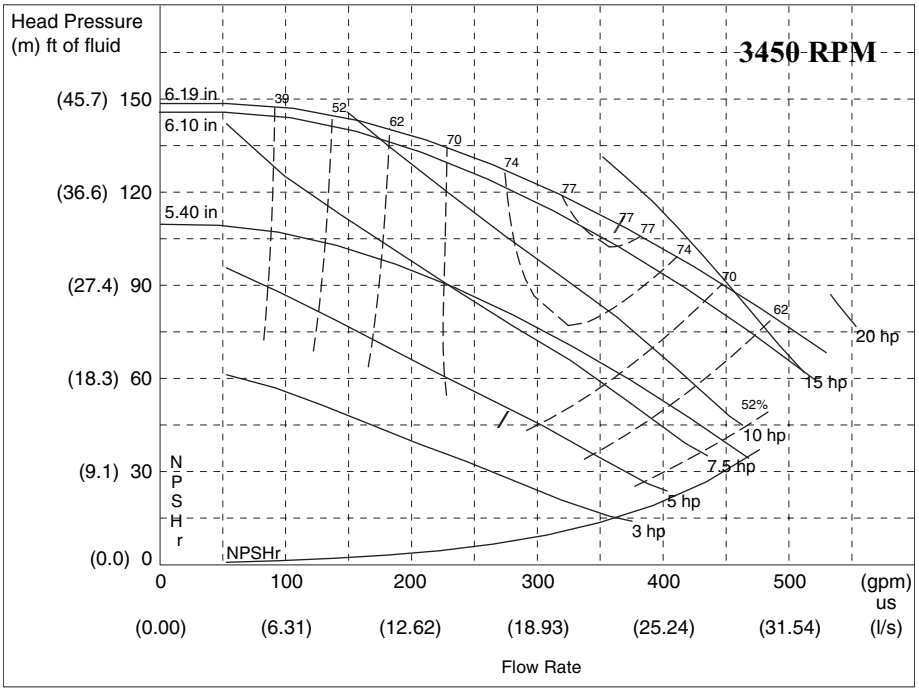

LEGEND

NPSHr — Net Positive Suction Head (Pressure) Required

NOTE: Refer to the 30RB nomenclature on page 4 for option identification. Refer to the Pump Impeller Sizes table on page 40 for more information.

PUMP CURVE VIII FOR HYDRONIC PACKAGE DUAL PUMP (Fresh Water)

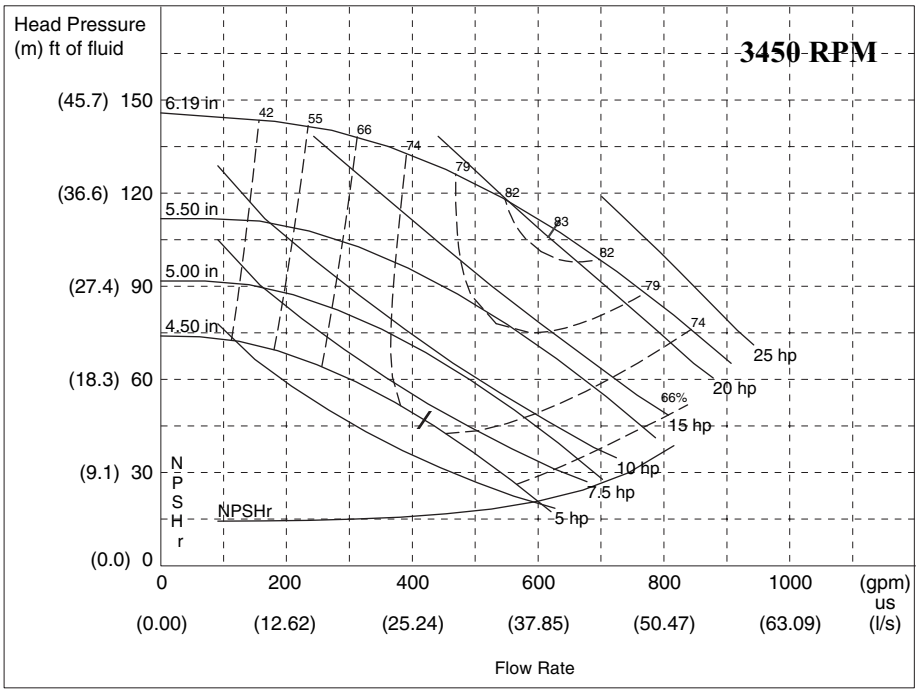

LEGEND

NPSHr — Net Positive Suction Head (Pressure) Required

NOTE: Refer to the 30RB nomenclature on page 4 for option identification. Refer to the Pump Impeller Sizes table on page 40 for more information.

30RB060, 070 — SINGLE PUMP ENVELOPE CURVES

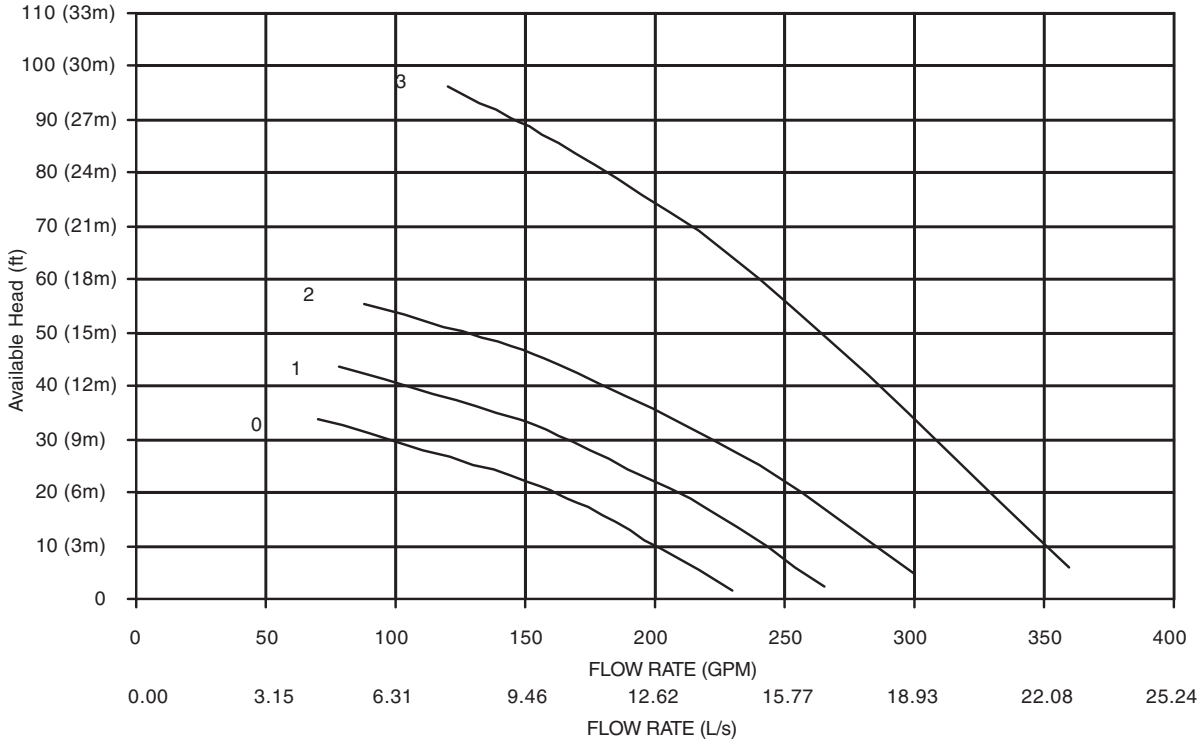

30RB080, 090, 100 — SINGLE PUMP ENVELOPE CURVES

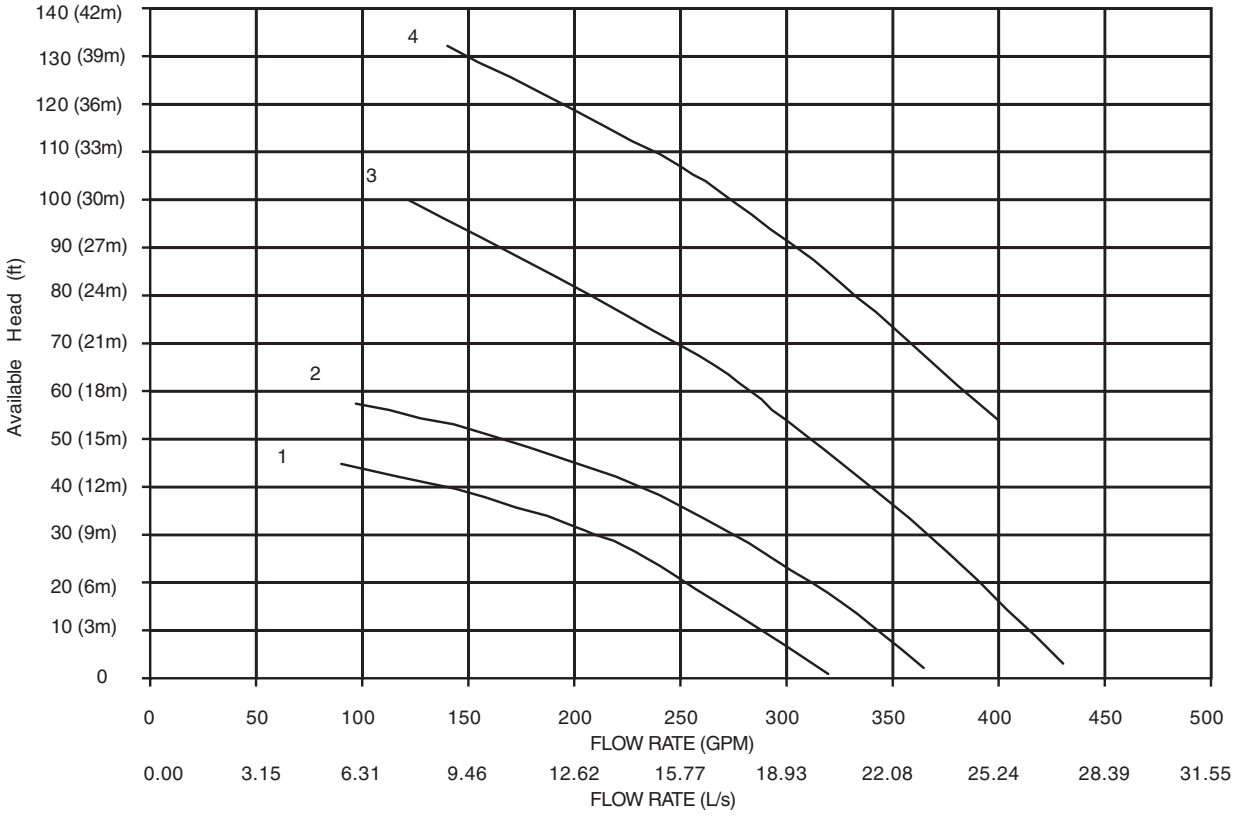

NOTE: Refer to the 30RB nomenclature on page 4 for pump envelope curve option identification.

Selection procedure (cont)

30RB110, 120, 130 — SINGLE PUMP ENVELOPE CURVES

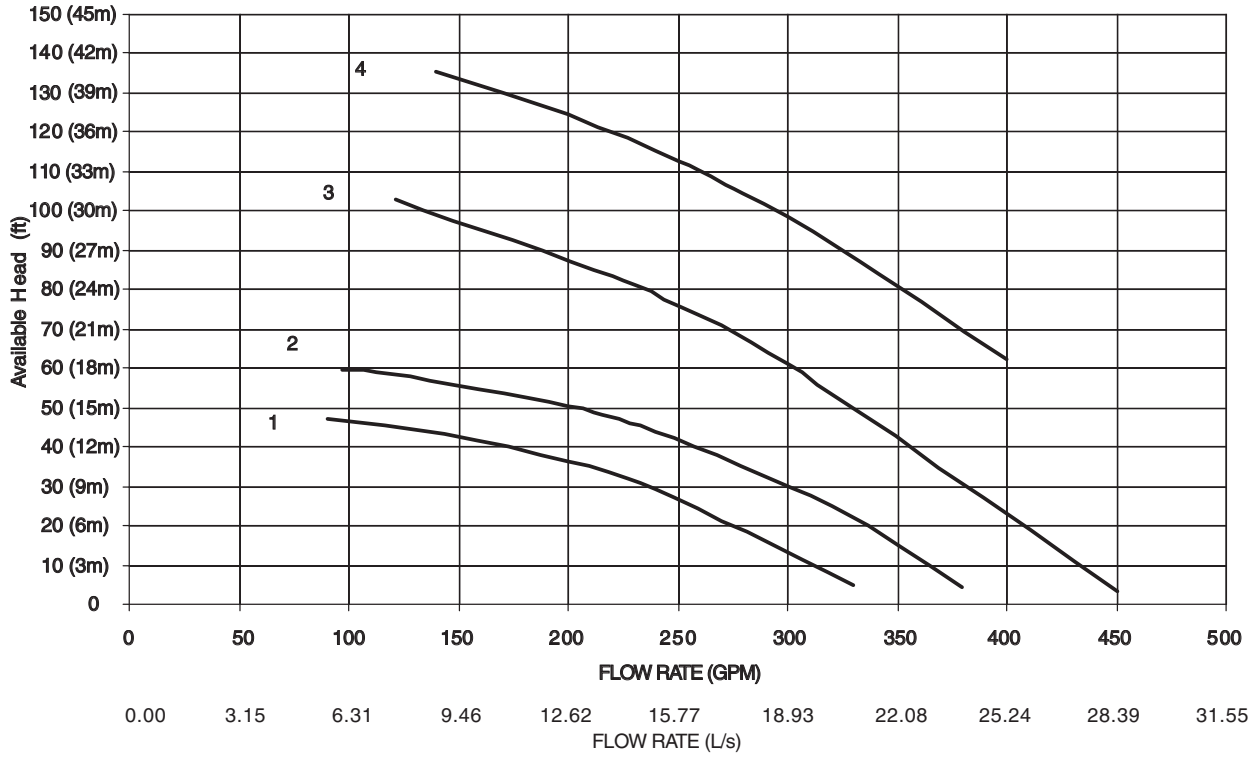

30RB150, 160, 170, 190 — SINGLE PUMP ENVELOPE CURVES

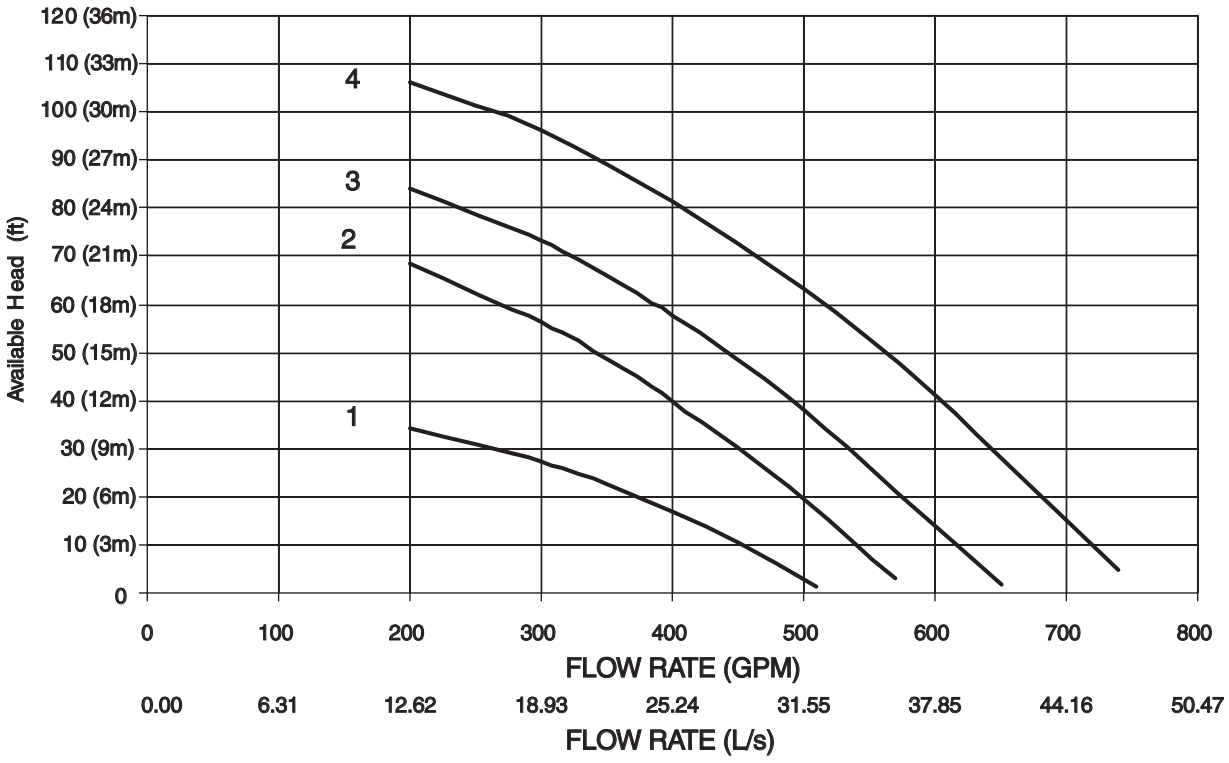

NOTE: Refer to the 30RB nomenclature on page 4 for pump envelope curve option identification.

30RB060, 070 — DUAL PUMP ENVELOPE CURVES

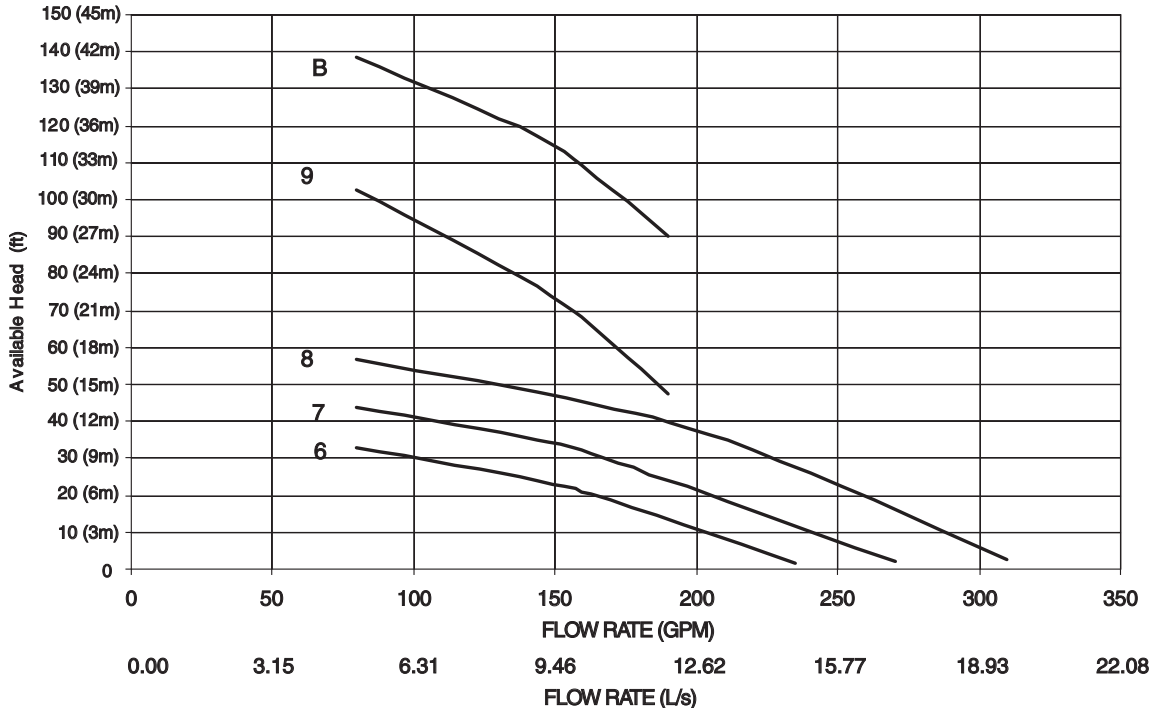

30RB080, 090, 100 — DUAL PUMP ENVELOPE CURVES

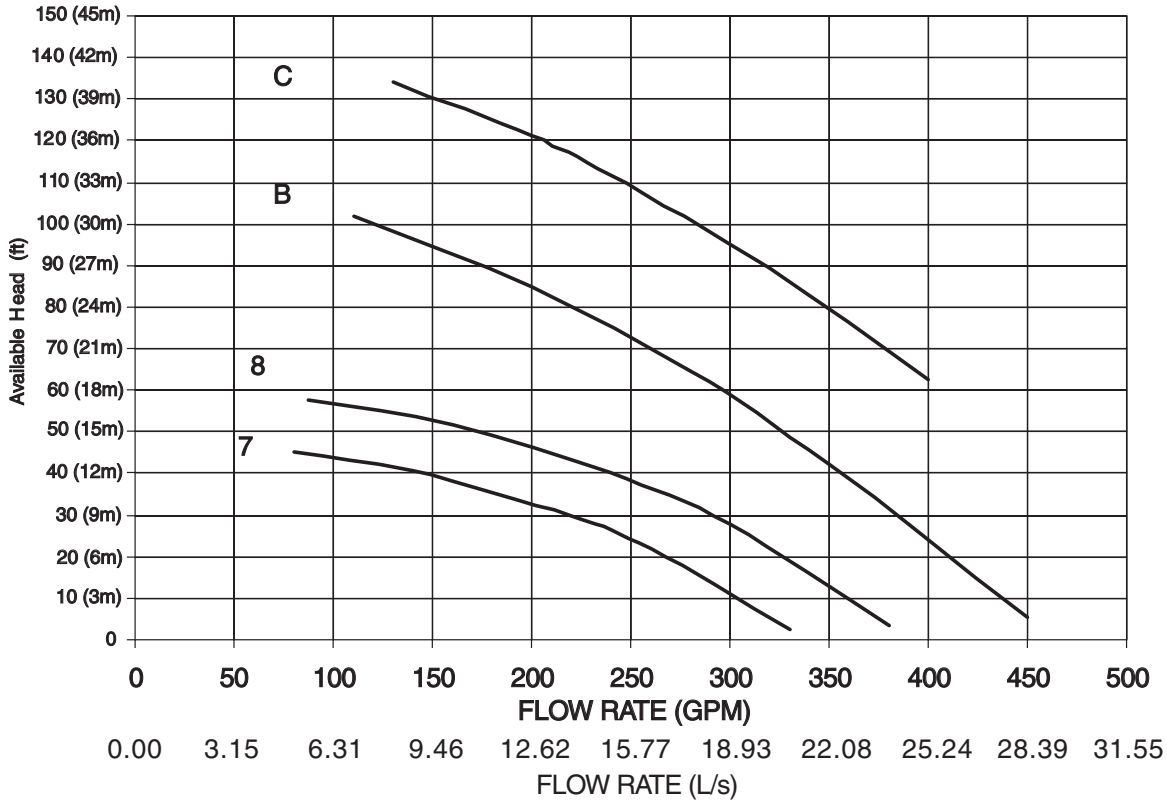

NOTE: Refer to the 30RB nomenclature on page 4 for pump envelope curve option identification.

Selection procedure (cont)

30RB110, 120, 130 — DUAL PUMP ENVELOPE CURVES

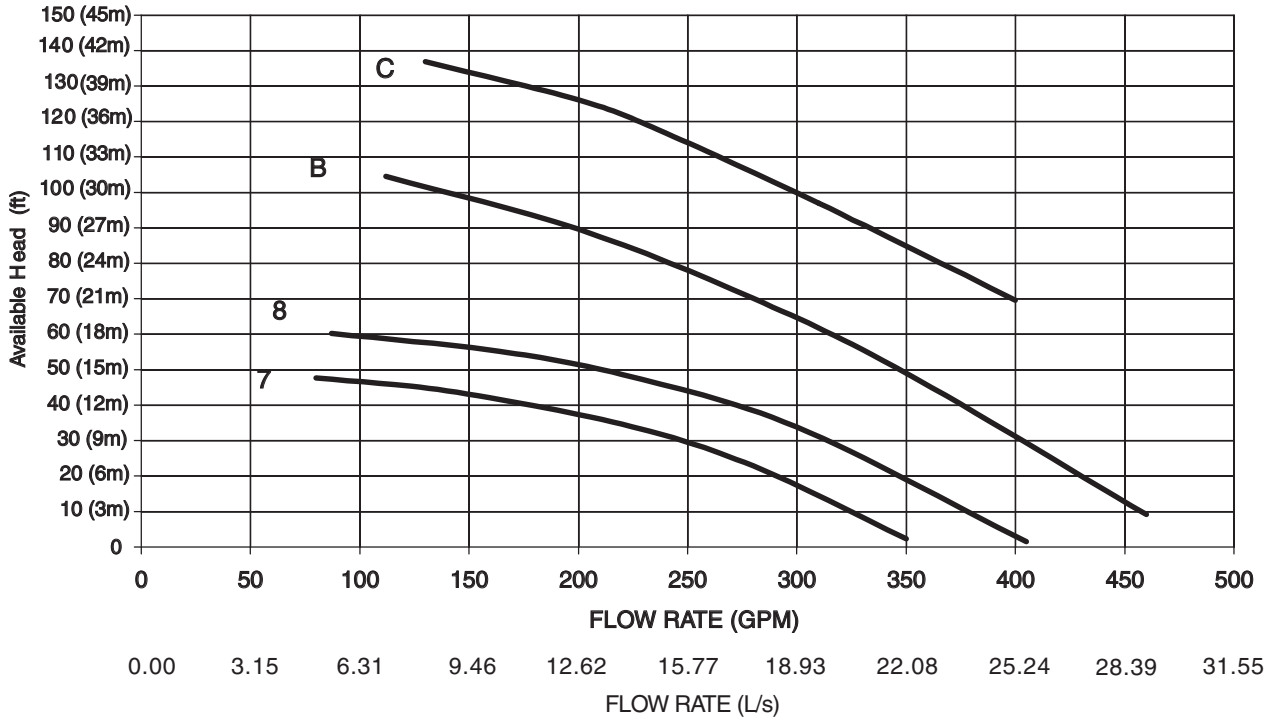

30RB150, 160, 170, 190 — DUAL PUMP ENVELOPE CURVES

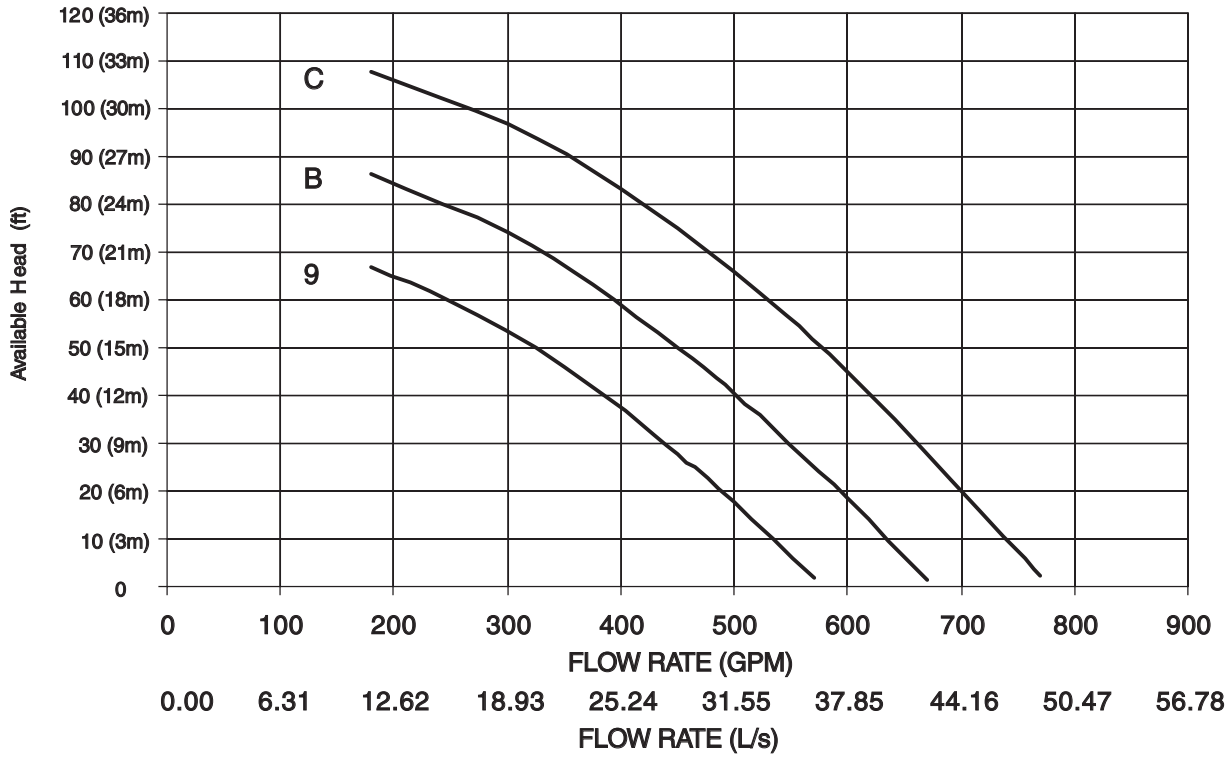

NOTE: Refer to the 30RB nomenclature on page 4 for pump envelope curve option identification.

Performance data

30RB PACKAGED AIR-COOLED CHILLER RATINGS TABLE — ENGLISH

LCWT (F)	UNIT SIZE	CONDENSER ENTERING AIR TEMPERATURE (F)														
		85			95			105			115			120		
		Cap. (Tons)	Input kW	Cooler Flow Rate (gpm)	Cap. (Tons)	Input kW	Cooler Flow Rate (gpm)	Cap. (Tons)	Input kW	Cooler Flow Rate (gpm)	Cap. (Tons)	Input kW	Cooler Flow Rate (gpm)	Cap. (Tons)	Input kW	Cooler Flow Rate (gpm)
40	30RB060	56.4	63.4	134.8	52.9	69.2	126.4	49.1	75.8	117.3	45.1	83.2	107.6	42.9	87.2	102.5
	30RB070	65.9	74.9	157.4	61.8	81.9	147.7	57.5	89.8	137.4	52.8	98.5	126.2	50.3	103.3	120.1
	30RB080	75.0	85.1	179.2	70.1	93.1	167.4	64.9	102.1	154.9	59.2	112.1	141.3	56.2	117.6	134.1
	30RB090	85.5	96.0	204.1	80.3	104.9	191.7	74.7	114.8	178.3	68.6	125.9	163.8	65.3	131.8	156.0
	30RB100	94.9	107.6	226.6	89.1	117.6	212.8	83.0	128.8	198.2	76.3	141.3	182.3	72.7	148.0	173.7
	30RB110	104.6	118.3	249.7	98.0	129.5	234.2	91.1	142.2	217.4	83.6	156.3	199.7	79.7	164.0	190.2
	30RB120	117.4	132.4	280.3	110.3	144.8	263.3	102.6	158.7	244.9	94.2	174.0	224.9	89.7	182.3	214.2
	30RB130	125.9	142.3	300.7	118.2	155.4	282.2	109.9	170.1	262.4	100.8	186.4	240.7	95.9	195.2	229.0
	30RB150	142.8	160.7	340.9	133.9	175.5	319.9	124.4	192.0	297.1	114.0	210.4	272.2	108.3	220.2	258.7
	30RB160	150.7	169.6	359.8	141.6	185.1	338.1	131.7	202.4	314.6	121.0	221.7	288.8	115.1	232.1	274.9
	30RB170	164.3	186.9	392.2	154.4	204.1	368.6	143.5	223.3	342.6	131.6	244.6	314.1	125.2	256.0	299.0
	30RB190	185.9	212.8	443.8	174.7	232.1	417.1	162.7	253.8	388.4	149.5	277.8	356.9	142.3	290.7	339.7
	30RB210	199.1	223.2	475.4	187.2	243.8	446.9	174.1	266.8	415.8	159.8	292.4	381.6	152.1	306.1	363.1
	30RB225	211.6	240.2	505.2	198.9	262.5	475.2	185.0	287.4	441.7	169.8	315.0	405.3	161.5	329.8	385.6
	30RB250	235.0	267.3	561.1	221.0	292.0	527.7	205.6	319.5	490.5	188.8	350.0	450.8	179.7	366.4	429.1
	30RB275	257.0	292.5	613.8	241.8	319.2	577.5	225.3	349.3	538.1	207.0	382.4	494.5	197.1	400.3	470.5
	30RB300	279.2	319.1	666.6	262.7	348.1	627.2	244.8	380.7	584.5	225.2	416.9	537.8	214.5	436.3	512.3
	30RB315	301.4	339.2	719.6	283.0	370.2	676.2	263.4	404.8	629.2	242.0	443.4	577.6	230.2	464.2	549.8
	30RB330	315.0	356.5	752.0	296.0	389.2	706.7	275.2	445.0	631.4	246.7	466.3	602.9	240.3	488.1	573.9
	30RB345	328.6	373.8	784.4	309.0	408.2	737.2	287.0	446.6	685.2	263.2	489.2	628.2	250.4	512.0	598.0
	30RB360	350.2	399.7	836.0	329.0	436.2	785.7	306.2	477.1	731.0	281.1	522.4	671.0	267.5	546.7	638.7
	30RB390	371.8	425.6	887.6	349.0	464.2	834.2	325.4	507.6	776.8	297.0	555.6	713.8	284.6	581.4	679.4
42	30RB060	58.6	64.0	140.1	55.0	69.8	131.4	51.1	76.4	122.1	46.9	83.8	112.0	44.6	87.8	106.7
	30RB070	68.4	75.7	163.3	64.2	82.7	153.3	59.7	90.6	142.7	54.9	99.4	131.2	52.3	104.2	125.0
	30RB080	78.1	86.1	186.5	72.9	94.1	174.3	67.5	103.2	161.3	61.6	113.3	147.2	58.5	118.7	139.8
	30RB090	88.7	96.9	211.9	83.3	105.7	199.1	77.6	115.7	185.3	71.3	126.8	170.3	67.9	132.8	162.2
	30RB100	98.4	108.5	235.2	92.4	118.6	220.8	86.1	129.9	205.7	79.2	142.4	189.4	75.5	149.1	180.5
	30RB110	108.5	119.6	259.2	101.8	130.8	243.2	94.6	143.5	226.0	86.9	157.7	207.6	82.7	165.3	197.8
	30RB120	121.7	133.8	290.7	114.4	146.1	273.3	106.5	160.1	254.5	97.8	175.5	233.7	93.1	183.8	222.7
	30RB130	130.6	143.7	312.2	122.7	156.8	293.1	114.1	171.6	272.6	104.8	188.0	250.3	99.7	196.8	238.2
	30RB150	148.2	162.4	354.0	139.1	177.3	332.3	129.2	194.0	308.8	118.4	212.4	283.0	112.6	222.3	269.1
	30RB160	156.6	171.3	374.2	147.2	186.9	351.8	137.0	204.3	327.4	125.9	223.7	300.7	119.8	234.1	286.3
	30RB170	170.6	188.8	407.5	160.3	206.1	383.0	149.1	225.4	356.3	136.9	246.8	327.0	130.2	258.3	311.1
	30RB190	193.1	214.9	461.4	181.5	234.4	433.8	169.1	256.2	404.0	155.5	280.4	371.5	148.0	293.3	353.7
	30RB210	206.8	225.5	493.9	194.4	246.2	464.6	181.0	269.4	432.4	166.2	295.1	397.1	158.2	308.9	378.0
	30RB225	219.6	242.8	524.7	206.5	265.2	493.0	192.2	290.3	459.1	176.4	318.0	421.5	167.9	332.9	401.2
	30RB250	243.7	270.1	582.3	229.3	294.9	548.0	213.5	322.6	510.2	196.2	353.3	468.7	186.8	369.7	446.2
	30RB275	266.6	295.4	637.1	250.9	322.3	599.5	233.9	352.5	558.8	215.0	385.9	513.8	204.8	403.8	489.2
	30RB300	289.6	322.2	692.0	272.5	351.5	651.2	254.1	384.2	607.1	233.9	420.6	558.8	222.9	440.1	532.7
	30RB315	313.2	342.6	748.4	294.4	373.8	703.6	274.0	408.6	654.8	251.8	447.4	601.4	239.6	468.2	572.6
	30RB330	327.2	360.1	781.7	307.5	393.0	734.8	286.2	429.7	683.7	262.7	470.5	627.8	250.0	492.4	597.4
	30RB345	341.1	377.6	815.1	321.0	412.2	766.0	298.3	450.9	712.7	273.7	493.7	654.1	260.4	516.7	622.3
	30RB360	363.7	403.7	868.9	341.8	440.5	816.8	318.2	481.6	760.3	292.3	527.2	698.5	278.2	551.7	664.8
	30RB390	386.2	429.9	922.8	363.0	468.8	867.5	338.1	512.4	807.9	310.9	560.7	742.9	296.0	586.7	707.4
44	30RB060	60.8	64.8	145.3	57.1	70.5	136.6	53.1	77.1	126.9	48.7	84.5	116.5	46.4	88.5	111.0
	30RB070	70.8	76.5	169.4	66.5	83.5	159.1	61.9	91.5	148.0	57.0	100.3	136.3	54.3	105.1	129.8
	30RB080	81.3	87.2	194.3	76.0	95.3	181.6	70.2	104.4	167.9	64.1	114.5	153.3	60.8	119.9	145.5
	30RB090	92.0	98.1	220.1	86.5	106.7	206.8	80.6	116.6	192.6	74.0	127.7	177.0	70.5	133.7	168.6
	30RB100	101.9	109.8	243.9	95.8	119.6	229.1	89.2	131.0	213.4	82.2	143.6	196.6	78.4	150.3	187.5
	30RB110	112.3	121.0	268.6	105.5	132.2	252.3	98.1	144.8	234.6	90.1	159.0	215.5	85.9	166.7	205.4
	30RB120	126.0	135.4	301.3	118.5	147.7	283.2	110.4	161.5	264.0	101.5	177.1	242.7	96.7	185.4	231.3
	30RB130	135.5	145.1	324.0	127.3	158.3	304.3	118.4	173.1	283.1	108.8	189.6	260.2	103.6	198.5	247.7
	30RB150	153.9	164.3	368.0	144.5	179.3	345.4	134.2	196.0	320.9	123.0	214.5	294.2	117.0	224.4	279.8
	30RB160	162.7	173.0	388.9	153.1	188.7	366.0	142.5	206.2	340.6	130.9	225.6	313.0	124.7	236.1	298.1
	30RB170	177.1	190.8	423.5	166.5	208.2	398.1	155.0	227.7	370.6	142.3	249.2	340.2	135.4	260.7	323.7
	30RB190	200.6	217.2	479.3	188.6	236.7	450.9	175.6	258.7	419.9	161.5	283.0	386.2	153.9	296.0	368.0
	30RB210	214.7	227.9	513.2	201.9	248.7	482.5	188.0	272.0	449.4	172.7	297.8	412.9	164.4	311.7	393.1
	30RB225	228.0	245.5	545.1	214.4	268.1	512.5	199.5	293.3	476.7	183.2	321.1	438.1	174.4	336.0	416.9
	30RB250	252.9	273.0	604.6	238.0	298.0	569.0	221.8	325.8	530.2	203.7	356.6	486.7	194.0	373.2	463.9
	30RB275	276.6	298.5	661.3	260.3	325.6	622.4	242.7	355.9	580.2	223.3	389.5	533.9	212.7	407.5	508.6
	30RB300	300.4	325.5	718.2	282.7	354.9	675.9	263.6	387.8	630.3	242.7	424.4	580.3	231.4	444.0	553.4
	30RB315	325.3	346.0	777.8	306.0	377.4	731.9	284.9	412.4	681.3	261.8	451.3	626.0	249.3	472.2	596.1
	30RB330	339.8	363.8	812.4	319.6	396.9	764.0	297.5	433.9	711.2	273.2	474.8	653.2	260.0	496.8	621.7
	30RB345	354.3	381.7	847.0	333.0	416.5	796.2	310.0	455.4	741.2	284.6	498.4	680.4	270.8	521.4	647.4
	30RB360	377.7	408.0	902.8	355.1	445.0	849.0	330.6	486.4	790.5	303.8	532.2	726.4	289.3	556.7	691.7
	30RB390	401.2	434.4	958.5	377.2	473.5	901.8	351.3	517.3	839.9	323.1	565.9	772.5	307.8	592.0	736.1

LEGEND

LCWT — Leaving Chilled Water Temperature

NOTE: Ratings are for standard chillers with no options.

Performance data (cont)

Carrier®

30RB PACKAGED AIR-COOLED CHILLER RATINGS TABLE — ENGLISH (cont)

LCWT (F)	UNIT SIZE	CONDENSER ENTERING AIR TEMPERATURE (F)														
		85			95			105			115			120		
		Cap. (Tons)	Input kW	Cooler Flow Rate (gpm)	Cap. (Tons)	Input kW	Cooler Flow Rate (gpm)	Cap. (Tons)	Input kW	Cooler Flow Rate (gpm)	Cap. (Tons)	Input kW	Cooler Flow Rate (gpm)	Cap. (Tons)	Input kW	Cooler Flow Rate (gpm)
46	30RB060	63.1	65.7	151.0	59.3	71.5	141.9	55.2	77.9	132.1	50.7	85.2	121.2	48.3	89.2	115.5
	30RB070	73.4	77.6	175.5	68.9	84.5	164.9	64.2	92.4	153.6	59.1	101.3	141.4	56.3	106.1	134.8
	30RB080	84.5	88.4	202.2	79.1	96.5	189.3	73.2	105.7	175.2	66.8	115.8	159.9	63.4	121.3	151.8
	30RB090	95.4	99.4	228.3	89.7	108.0	214.6	83.6	117.7	200.0	76.9	128.7	184.1	73.3	134.7	175.4
	30RB100	105.5	111.2	252.5	99.2	121.0	237.4	92.5	132.1	221.3	85.2	144.7	203.9	81.3	151.6	194.5
	30RB110	116.3	122.8	278.2	109.3	133.8	261.4	101.7	146.3	243.3	93.5	160.5	223.7	89.1	168.2	213.2
	30RB120	130.5	137.0	312.1	122.7	149.4	293.5	114.3	163.2	273.6	105.3	178.6	251.9	100.3	187.0	240.1
	30RB130	140.5	146.5	336.0	132.0	159.8	315.7	122.8	174.7	293.9	112.9	191.3	270.2	107.6	200.2	257.5
	30RB150	159.8	166.2	382.2	150.1	181.3	359.0	139.5	198.1	333.7	127.9	216.7	306.0	121.6	226.6	291.0
	30RB160	168.8	174.7	403.8	158.9	190.5	380.1	148.0	208.2	354.2	136.1	227.7	325.6	129.6	238.2	310.1
	30RB170	183.8	192.9	439.7	172.8	210.4	413.4	160.9	230.0	384.9	147.9	251.6	353.7	140.7	263.2	336.7
	30RB190	208.0	219.5	497.4	195.6	239.1	468.0	182.3	261.2	436.0	167.7	285.6	401.2	159.9	298.7	382.4
	30RB210	222.9	230.4	533.1	209.6	251.4	501.4	195.2	274.8	467.1	179.4	300.7	429.3	170.9	314.6	408.8
	30RB225	236.6	248.3	566.0	222.7	271.1	532.6	207.3	296.4	495.5	190.4	324.4	455.4	181.2	339.4	433.6
	30RB250	262.3	276.0	627.6	246.9	301.1	590.7	230.2	329.2	550.7	211.6	360.2	506.3	201.6	376.7	482.4
	30RB275	286.9	301.6	686.2	270.0	328.9	645.9	251.7	359.4	602.2	231.8	393.2	554.4	220.9	411.2	528.5
	30RB300	311.5	328.8	745.1	293.2	358.4	701.3	273.4	391.5	654.0	251.8	428.2	602.4	240.2	447.9	574.5
	30RB315	337.6	349.5	807.6	317.8	381.0	760.2	296.1	416.3	708.3	272.2	455.4	651.2	259.3	476.4	620.3
	30RB330	352.6	367.6	843.5	331.7	400.9	793.5	309.0	438.2	739.1	284.0	479.3	679.3	270.4	501.4	646.8
	30RB345	367.6	385.8	879.4	345.6	420.8	826.8	321.8	460.0	769.9	295.7	503.3	707.5	281.5	526.4	673.3
	30RB360	391.9	412.4	937.2	368.4	449.5	881.4	343.2	491.2	821.0	315.6	537.2	755.0	300.6	561.9	719.1
	30RB390	416.1	438.9	994.9	391.3	478.3	936.0	364.5	522.3	872.0	335.4	571.2	802.4	319.7	597.4	764.9
48	30RB060	65.5	66.6	156.9	61.6	72.5	147.4	57.4	78.9	137.4	52.7	86.0	126.2	50.2	89.9	120.2
	30RB070	75.9	78.6	181.8	71.3	85.6	170.8	66.5	93.4	159.1	61.3	102.2	146.6	58.4	107.0	139.9
	30RB080	87.7	90.1	209.9	82.3	97.9	196.9	76.3	107.0	182.5	69.6	117.2	166.7	66.1	122.6	158.2
	30RB090	98.9	100.8	236.8	93.0	109.4	222.6	86.7	119.1	207.4	79.8	129.8	191.2	76.1	135.7	182.3
	30RB100	109.2	112.8	261.5	102.7	122.6	245.8	95.8	133.6	229.2	88.3	146.0	211.3	84.2	152.8	201.6
	30RB110	120.4	124.8	288.2	113.1	135.8	270.8	105.3	148.1	252.1	96.9	162.1	232.0	92.4	169.6	221.2
	30RB120	135.0	138.6	323.2	126.9	151.1	303.9	118.4	165.1	283.4	109.1	180.5	261.1	104.0	188.7	249.1
	30RB130	145.6	148.0	348.4	136.8	161.4	327.5	127.4	176.4	304.9	117.2	193.0	280.5	111.7	202.0	267.3
	30RB150	165.8	168.2	396.9	155.8	183.4	373.0	144.9	200.4	346.8	132.9	219.0	318.1	126.4	229.0	302.6
	30RB160	175.1	176.5	419.1	164.9	192.4	394.6	153.8	210.2	368.0	141.4	229.8	338.5	134.7	240.3	322.5
	30RB170	190.7	195.1	456.4	179.3	212.7	429.2	167.0	232.4	399.7	153.6	254.1	367.6	146.2	265.7	349.9
	30RB190	215.7	221.8	516.4	202.9	241.6	485.3	189.1	263.8	452.6	174.0	288.3	416.6	165.9	301.4	397.1
	30RB210	231.2	233.0	553.5	217.7	254.1	521.0	202.7	277.6	485.0	186.4	303.7	446.2	177.6	317.6	425.0
	30RB225	245.5	251.3	587.7	231.1	274.2	553.2	215.3	299.7	515.2	197.8	327.8	473.4	188.3	342.8	450.7
	30RB250	272.2	279.2	651.5	256.2	304.4	613.3	238.9	332.7	571.8	219.8	363.8	526.1	209.4	380.5	500.8
	30RB275	297.6	305.0	712.2	280.1	332.4	670.4	261.2	363.1	625.2	240.5	397.0	575.7	229.3	415.1	549.0
	30RB300	323.1	332.4	772.9	304.1	362.1	727.9	283.6	395.4	678.4	261.3	432.3	625.5	249.2	452.0	596.6
	30RB315	350.2	353.1	838.2	329.7	384.8	789.3	307.5	420.3	736.1	282.8	459.6	676.9	269.4	480.6	644.9
	30RB330	365.8	371.6	875.5	344.2	405.1	823.8	320.7	442.5	767.8	295.0	483.9	706.1	280.9	506.0	672.4
	30RB345	381.4	390.1	912.9	358.6	425.4	858.3	334.0	464.7	799.4	307.1	508.3	735.2	292.4	531.5	699.8
	30RB360	406.4	416.9	972.8	382.2	454.3	914.4	356.1	496.1	852.3	327.6	542.4	784.2	312.1	567.2	747.0
	30RB390	431.5	443.7	1032.7	405.8	483.2	970.5	378.1	527.5	905.2	348.1	576.6	833.2	331.8	602.8	794.2
50	30RB060	67.9	67.6	162.7	63.8	73.4	152.9	59.5	80.0	142.4	54.8	87.1	131.1	52.2	90.9	125.1
	30RB070	78.6	79.7	188.2	73.8	86.8	176.8	68.8	94.6	164.8	63.4	103.3	151.9	60.5	108.0	145.1
	30RB080	90.7	91.8	217.1	85.2	99.7	204.0	79.2	108.4	189.8	72.5	118.6	173.6	68.8	124.0	164.8
	30RB090	102.4	102.2	245.2	96.3	110.9	230.6	89.8	120.6	214.9	82.7	131.3	198.1	79.0	137.0	189.1
	30RB100	113.0	114.3	270.7	106.3	124.3	254.5	99.1	135.4	237.3	91.4	147.5	218.9	87.2	154.1	209.0
	30RB110	124.6	126.8	298.3	117.1	138.0	280.3	109.0	150.3	261.2	100.3	163.9	240.3	95.7	171.5	229.1
	30RB120	139.6	140.3	334.4	131.3	152.9	314.5	122.5	166.9	293.4	112.9	182.4	270.4	107.7	190.7	258.1
	30RB130	150.8	149.6	361.2	141.8	163.0	339.5	132.0	178.1	316.2	121.5	194.8	291.0	115.8	203.8	277.5
	30RB150	172.1	170.4	412.1	161.7	185.6	387.3	150.5	202.7	360.4	138.0	221.4	330.6	131.3	231.4	314.5
	30RB160	181.6	178.4	434.9	171.0	194.4	409.6	159.5	212.2	382.1	146.9	231.9	351.7	139.9	242.5	335.1
	30RB170	197.7	197.4	473.5	186.0	215.0	445.4	173.2	234.8	414.9	159.3	256.7	381.6	151.8	268.4	363.5
	30RB190	223.7	224.3	535.7	210.4	244.2	503.8	196.1	266.4	469.6	180.5	291.0	432.3	172.1	304.2	412.2
	30RB210	239.8	235.6	574.3	225.9	256.9	541.0	210.5	280.6	503.8	193.6	306.7	463.5	184.4	320.7	441.6
	30RB225	254.7	254.3	609.4	239.8	277.4	574.2	223.5	303.1	535.2	205.3	331.3	491.4	195.6	346.4	468.3
	30RB250	282.3	282.5	675.5	265.8	307.9	636.2	247.8	336.3	593.5	228.1	367.6	546.4	217.4	384.3	520.6
	30RB275	308.6	308.5	738.6	290.5	336.0	695.8	270.9	366.9	648.5	249.5	400.9	597.6	238.0	419.1	569.9
	30RB300	335.1	336.1	802.3	315.4	366.0	755.1	294.2	399.5	704.2	271.1	436.5	648.7	258.6	456.3	619.3
	30RB315	363.2	356.8	869.9	342.1	388.8	819.3	319.1	424.5	764.2	293.7	463.9	703.4	279.9	485.0	670.3
	30RB330	379.3	375.8	908.5	357.0	409.4	855.0	332.8	447.1	797.0	306.2	488.6	733.4	291.7	510.9	698.7
	30RB345	395.4	394.9	947.1	371.9	430.1	890.8	346.5	469.6	829.8	318.7	513.4	763.3	303.6	536.7	727.0
	30RB360	421.4	421.7	1009.2	396.3	459.2	949.2	369.3	501.3	884.5	339.9	547.7	814.0	323.9	572.6	775.7
	30RB390	447.4	448.6	1071.4	420.8	488.3	1007.7	392.1	532.9	939.2	361.0	582.1	864.6	344.2	608.5	824.3

LEGEND

LCWT — Leaving Chilled Water Temperature

NOTE: Ratings are for standard chillers with no options.

30RB PACKAGED AIR-COOLED CHILLER RATINGS TABLE — ENGLISH (cont)

LCWT (F)	UNIT SIZE	CONDENSER ENTERING AIR TEMPERATURE (F)														
		85			95			105			115			120		
		Cap. (Tons)	Input kW	Cooler Flow Rate (gpm)	Cap. (Tons)	Input kW	Cooler Flow Rate (gpm)	Cap. (Tons)	Input kW	Cooler Flow Rate (gpm)	Cap. (Tons)	Input kW	Cooler Flow Rate (gpm)	Cap. (Tons)	Input kW	Cooler Flow Rate (gpm)
55	30RB060	74.0	70.0	177.4	69.6	76.0	166.8	64.8	82.6	155.6	59.6	89.8	149.5	56.8	93.6	147.1
	30RB070	85.4	82.6	204.8	80.3	89.8	192.5	74.8	97.8	179.5	69.0	106.6	165.5	65.9	111.3	158.0
	30RB080	98.4	96.5	235.9	92.4	104.5	221.5	85.9	113.3	209.0	78.6	122.6	207.5	74.7	127.4	208.0
	30RB090	111.5	106.0	267.3	104.8	114.9	251.3	97.6	124.7	240.0	89.8	135.4	228.5	85.6	141.1	222.2
	30RB100	122.8	118.5	294.5	115.5	128.7	277.0	107.7	140.0	258.4	99.4	152.4	238.4	94.9	158.9	227.6
	30RB110	135.3	132.3	324.5	127.2	143.8	305.0	118.6	156.4	284.4	109.1	170.1	268.3	103.9	177.3	260.9
	30RB120	151.4	145.2	363.1	142.7	157.6	342.1	133.0	171.8	322.9	122.4	187.4	306.4	116.8	195.6	297.5
	30RB130	163.8	154.6	392.8	154.5	167.5	370.5	144.2	182.6	345.7	132.8	199.5	318.5	126.7	208.5	303.8
	30RB150	186.1	179.9	446.1	175.6	194.2	421.0	164.4	209.7	394.2	150.8	227.4	382.0	143.0	237.2	381.7
	30RB160	198.7	183.4	476.4	186.7	199.5	456.9	173.7	217.4	435.8	159.7	237.2	413.2	152.2	247.8	401.1
	30RB170	215.1	205.4	515.7	202.6	222.8	485.6	189.1	241.8	457.6	173.9	263.1	434.2	165.5	274.8	421.7
	30RB190	244.5	230.8	586.3	230.1	251.0	551.7	214.5	273.6	514.3	197.6	298.4	473.7	188.4	311.7	451.8
	30RB210	260.1	246.7	623.7	245.8	266.9	589.4	230.1	289.0	555.8	211.6	314.7	522.9	201.2	328.5	511.9
	30RB225	275.6	268.1	661.0	260.5	289.4	624.6	244.3	312.6	586.2	225.2	340.6	540.1	214.5	355.7	518.4
	30RB250	306.7	295.1	735.6	289.4	319.6	694.0	270.8	346.7	649.4	249.9	377.5	599.1	238.0	394.2	578.5
	30RB275	336.4	320.4	806.7	317.0	347.5	760.3	296.2	377.6	710.4	273.2	411.4	656.4	260.4	429.6	632.7
	30RB300	366.5	346.0	879.0	345.3	376.4	827.9	322.1	410.3	771.9	296.9	447.6	711.9	283.3	467.6	678.8
	30RB315	397.5	366.8	952.8	373.4	398.9	913.8	347.5	434.8	871.5	319.4	474.4	826.4	304.3	495.6	802.2
	30RB330	413.8	388.8	992.1	389.3	422.3	942.5	362.9	459.2	893.4	333.6	500.3	847.4	317.7	522.6	822.8
	30RB345	430.2	410.9	1031.4	405.2	445.6	971.3	378.3	483.6	915.3	347.8	526.3	868.4	331.0	549.6	843.4
	30RB360	459.6	436.3	1102.0	432.7	473.8	1037.4	403.6	515.4	972.0	371.4	561.6	907.9	353.9	586.5	873.5
	30RB390	489.0	461.7	1172.6	460.2	502.1	1103.5	429.0	547.1	1028.7	395.1	596.8	947.4	376.8	623.4	903.5
60	30RB060	75.9	70.8	182.3	71.0	76.7	170.3	65.7	83.1	157.7	60.1	90.1	144.3	57.2	93.9	137.2
	30RB070	89.2	84.2	214.0	83.3	91.2	199.8	77.1	99.1	185.0	70.5	107.6	169.3	67.1	112.1	161.0
	30RB080	99.6	97.2	239.0	92.9	105.0	223.1	86.0	113.4	206.4	78.6	122.6	188.7	74.7	127.4	179.4
	30RB090	115.0	107.5	276.0	107.4	116.2	257.9	99.5	125.7	238.8	91.0	136.2	218.5	86.6	141.7	207.8
	30RB100	128.2	120.9	307.7	119.7	130.8	287.4	110.9	141.7	266.0	101.5	153.6	243.5	96.5	160.0	231.6
	30RB110	139.5	134.6	334.7	130.1	145.6	312.2	120.3	157.6	288.6	109.9	170.8	263.7	104.4	177.6	250.5
	30RB120	159.1	150.3	381.7	148.9	161.9	357.3	138.3	174.7	331.9	126.6	189.3	303.9	120.3	197.3	288.6
	30RB130	172.2	159.1	413.4	161.2	171.6	386.8	149.5	185.4	358.9	136.7	201.2	328.2	129.8	210.0	311.4
	30RB150	189.1	182.1	453.8	177.2	195.5	425.3	164.8	210.1	395.5	150.8	227.4	362.0	143.0	237.2	343.3
	30RB160	206.1	186.6	494.7	192.8	201.6	462.7	178.3	219.2	427.8	162.8	238.5	390.7	154.6	248.9	370.9
	30RB170	223.0	209.2	535.3	208.9	225.2	501.3	193.6	243.6	464.6	176.9	264.5	424.5	167.9	275.9	402.9
	30RB190	256.9	236.4	616.5	240.4	254.7	577.0	222.2	276.6	533.4	202.9	300.8	487.0	192.7	313.7	462.4
	30RB210	266.5	250.9	639.7	249.6	269.8	599.1	231.9	290.6	556.5	212.1	314.9	509.1	201.2	328.5	483.0
	30RB225	283.4	273.8	680.2	265.6	293.7	637.6	247.2	315.3	593.2	226.2	341.0	542.9	214.5	355.7	514.8
	30RB250	319.6	302.2	766.9	299.4	324.7	718.6	277.8	350.3	666.7	254.2	379.4	610.0	241.1	395.7	578.7
	30RB275	353.4	328.7	848.2	331.2	353.2	794.8	306.7	382.0	736.2	280.4	414.5	672.9	266.1	432.2	638.7
	30RB300	388.0	355.8	931.2	363.4	383.0	872.2	336.0	415.7	806.4	306.8	452.0	736.3	291.3	471.3	699.2
	30RB315	412.2	373.2	989.3	385.6	403.3	925.3	356.5	438.4	855.6	325.5	477.1	781.3	309.1	497.8	741.9
	30RB330	429.1	395.8	1029.9	401.6	426.8	963.9	371.8	462.7	892.4	339.7	503.0	815.2	322.4	524.8	773.8
	30RB345	446.1	418.5	1070.6	417.7	450.3	1002.6	387.1	487.1	929.1	353.8	528.9	849.0	335.7	551.8	805.7
	30RB360	479.9	445.7	1151.8	449.3	479.9	1078.3	415.8	520.2	997.9	379.8	565.2	911.5	360.5	589.5	865.2
	30RB390	513.7	472.8	1233.0	480.8	509.4	1154.0	444.5	553.2	1066.8	405.8	601.5	974.0	385.3	627.3	924.7

LEGEND

LCWT — Leaving Chilled Water Temperature

NOTE: Ratings are for standard chillers with no options.

Performance data (cont)

30RB PACKAGED AIR-COOLED CHILLER RATINGS TABLE — SI

LCWT (C)	UNIT SIZE	CONDENSER ENTERING AIR TEMPERATURE (C)														
		30.0			35.0			40.0			45.0			50.0		
		Cap. (kW)	Input kW	Cooler Flow Rate (L/s)	Cap. (kW)	Input kW	Cooler Flow Rate (L/s)	Cap. (kW)	Input kW	Cooler Flow Rate (L/s)	Cap. (kW)	Input kW	Cooler Flow Rate (L/s)	Cap. (kW)	Input kW	Cooler Flow Rate (L/s)
5.0	30RB060	200.9	64.2	8.6	189.5	69.5	8.1	177.4	75.4	7.6	164.5	82.0	7.1	150.6	89.2	6.5
	30RB070	234.4	76.0	10.1	221.3	82.3	9.5	207.5	89.4	8.9	192.6	97.2	8.3	176.5	105.7	7.6
	30RB080	267.2	86.3	11.5	251.3	93.6	10.8	234.4	101.7	10.1	216.4	110.6	9.3	196.8	120.4	8.4
	30RB090	304.1	97.2	13.0	287.4	105.3	12.3	269.5	114.2	11.6	250.1	124.0	10.7	229.2	134.8	9.8
	30RB100	337.5	109.0	14.5	318.9	118.1	13.7	299.2	128.1	12.8	278.2	139.2	11.9	255.2	151.3	11.0
	30RB110	372.0	119.9	16.0	351.0	130.1	15.1	328.7	141.5	14.1	305.0	154.0	13.1	279.4	167.8	12.0
	30RB120	417.6	134.3	17.9	394.6	145.5	16.9	370.1	157.9	15.9	343.4	171.6	14.7	314.5	186.5	13.5
	30RB130	448.0	144.2	19.2	423.1	156.1	18.2	396.5	169.3	17.0	367.8	183.8	15.8	336.2	199.6	14.4
	30RB150	508.0	163.0	21.8	479.6	176.4	20.6	449.1	191.3	19.3	416.1	207.6	17.8	379.8	225.3	16.3
	30RB160	536.7	171.9	23.0	507.3	186.0	21.8	475.7	201.5	20.4	441.5	218.7	18.9	404.1	237.4	17.3
	30RB170	584.7	189.5	25.1	552.7	205.1	23.7	518.1	222.3	22.2	480.4	241.3	20.6	439.1	261.9	18.8
	30RB190	661.9	215.7	28.4	625.7	233.2	26.8	587.1	252.7	25.2	545.5	274.1	23.4	499.2	297.4	21.4
	30RB210	708.9	226.3	30.4	670.4	245.0	28.8	628.7	265.7	27.0	583.4	288.4	25.0	533.5	313.2	22.9
	30RB225	753.2	243.6	32.3	712.1	263.9	30.5	667.8	286.2	28.6	619.5	310.7	26.6	566.3	337.5	24.3
	30RB250	836.1	271.1	35.9	791.2	293.4	33.9	742.0	318.1	31.8	688.8	345.3	29.5	630.2	374.8	27.0
	30RB275	914.6	296.5	39.2	865.5	320.8	37.1	812.8	347.7	34.9	754.9	377.2	32.4	691.2	409.4	29.6
	30RB300	993.4	323.4	42.6	940.2	349.8	40.3	883.0	379.0	37.9	821.0	411.2	35.2	752.5	446.3	32.3
	30RB315	1073.5	343.8	46.0	1014.7	371.9	43.5	951.5	403.1	40.8	883.1	437.3	37.9	808.1	474.8	34.7
	30RB330	1121.4	361.4	48.1	1060.1	391.0	45.5	993.8	423.9	42.6	922.0	459.9	39.6	843.2	499.3	36.2
	30RB345	1169.4	378.9	50.2	1105.5	410.2	47.4	1036.1	444.7	44.4	960.9	482.5	41.2	878.2	523.8	37.7
	30RB360	1246.5	405.1	53.5	1178.5	438.3	50.6	1105.2	475.0	47.4	1025.9	515.3	44.0	938.3	559.3	40.3
	30RB390	1323.7	431.4	56.8	1251.5	466.4	53.7	1174.3	505.4	50.4	1091.0	548.2	46.8	998.4	594.8	42.8
6.0	30RB060	207.8	64.9	8.9	196.2	70.1	8.4	183.7	76.0	7.9	170.4	82.5	7.3	156.0	89.8	6.7
	30RB070	242.2	76.6	10.4	228.7	83.0	9.8	214.5	90.1	9.2	199.3	98.0	8.6	182.6	106.5	7.8
	30RB080	276.8	87.3	11.9	260.4	94.6	11.2	242.9	102.7	10.4	224.3	111.7	9.6	204.1	121.5	8.8
	30RB090	314.3	98.2	13.5	297.1	106.0	12.8	278.7	115.0	12.0	258.8	124.8	11.1	237.3	135.6	10.2
	30RB100	348.7	109.9	15.0	329.5	119.0	14.1	309.2	129.1	13.3	287.5	140.2	12.3	263.9	152.4	11.3
	30RB110	384.2	121.2	16.5	362.9	131.3	15.6	339.9	142.7	14.6	315.5	155.2	13.5	289.1	169.1	12.4
	30RB120	431.1	135.6	18.5	407.6	146.7	17.5	382.5	159.2	16.4	355.2	172.9	15.2	325.4	187.9	14.0
	30RB130	463.1	145.5	19.9	437.5	157.4	18.8	410.1	170.6	17.6	380.7	185.2	16.3	348.2	201.1	14.9
	30RB150	525.5	164.6	22.6	496.1	178.1	21.3	464.6	193.0	19.9	430.5	209.4	18.5	393.1	227.2	16.9
	30RB160	555.5	173.4	23.8	525.5	187.6	22.6	492.8	203.2	21.2	457.5	220.4	19.6	418.8	239.2	18.0
	30RB170	604.9	191.3	26.0	571.9	206.9	24.5	536.4	224.3	23.0	497.5	243.3	21.4	454.8	264.0	19.5
	30RB190	685.0	217.7	29.4	647.7	235.3	27.8	607.8	254.9	26.1	564.8	276.4	24.2	517.3	299.8	22.2
	30RB210	733.2	228.4	31.5	693.6	247.2	29.8	650.7	268.0	27.9	604.0	290.8	25.9	552.6	315.7	23.7
	30RB225	778.7	246.0	33.4	736.3	266.3	31.6	690.6	288.8	29.6	641.0	313.5	27.5	586.3	340.3	25.2
	30RB250	864.1	273.6	37.1	817.9	296.1	35.1	767.6	321.0	32.9	712.6	348.2	30.6	652.3	377.9	28.0
	30RB275	945.3	299.2	40.6	894.8	323.6	38.4	840.3	350.7	36.1	781.1	380.4	33.5	715.4	412.7	30.7
	30RB300	1026.7	326.3	44.1	971.8	352.8	41.7	912.9	382.2	39.2	849.1	414.5	36.4	778.9	449.7	33.4
	30RB315	1111.0	346.9	47.7	1050.9	375.2	45.1	985.6	406.4	42.3	915.0	440.8	39.3	837.6	478.4	36.0
	30RB330	1160.5	364.7	49.8	1097.3	394.5	47.1	1029.2	427.5	44.2	955.0	463.7	41.0	873.6	503.2	37.5
	30RB345	1209.9	382.5	51.9	1143.8	413.9	49.1	1072.8	448.6	46.0	995.0	486.6	42.7	909.6	528.0	39.0
	30RB360	1290.0	408.9	55.4	1219.6	442.3	52.3	1144.2	479.2	49.1	1062.3	519.7	45.6	972.1	563.8	41.7
	30RB390	1370.0	435.4	58.8	1295.4	470.6	55.6	1215.6	509.7	52.2	1129.6	552.7	48.5	1034.6	599.5	44.4
7.0	30RB060	214.8	65.6	9.2	203.0	70.8	8.7	190.2	76.6	8.2	176.4	83.1	7.6	161.6	90.4	6.9
	30RB070	250.1	77.5	10.7	236.3	83.8	10.2	221.6	90.9	9.5	206.0	98.8	8.8	188.9	107.4	8.1
	30RB080	287.2	88.3	12.3	270.3	95.7	11.6	252.1	103.8	10.8	232.5	112.8	10.0	211.6	122.6	9.1
	30RB090	325.0	99.3	14.0	307.3	107.1	13.2	288.4	115.8	12.4	268.0	125.7	11.5	245.6	136.5	10.5
	30RB100	359.8	111.1	15.5	340.2	120.0	14.6	319.3	130.1	13.7	297.0	141.3	12.8	272.9	153.5	11.7
	30RB110	396.5	122.5	17.0	374.7	132.7	16.1	351.2	143.9	15.1	326.0	156.5	14.0	298.9	170.3	12.8
	30RB120	444.8	137.0	19.1	420.7	148.2	18.1	395.0	160.5	17.0	367.2	174.3	15.8	336.5	189.3	14.5
	30RB130	478.5	146.8	20.5	452.1	158.8	19.4	424.0	172.0	18.2	393.7	186.7	16.9	360.5	202.7	15.5
	30RB150	543.7	166.3	23.3	513.4	179.9	22.0	480.9	194.9	20.7	445.6	211.3	19.1	407.0	229.1	17.5
	30RB160	574.7	175.0	24.7	544.0	189.2	23.4	510.4	204.9	21.9	473.9	222.2	20.4	434.0	241.0	18.6
	30RB170	625.8	193.1	26.9	591.7	208.9	25.4	555.1	226.3	23.8	515.2	245.5	22.1	471.1	266.2	20.2
	30RB190	708.5	219.7	30.4	670.0	237.5	28.8	628.9	257.1	27.0	584.5	278.7	25.1	535.8	302.2	23.0
	30RB210	758.4	230.6	32.6	717.5	249.5	30.8	673.2	270.4	28.9	625.1	293.3	26.8	572.2	318.3	24.6
	30RB225	805.5	248.5	34.6	761.9	269.0	32.7	714.6	291.5	30.7	663.3	316.3	28.5	606.8	343.2	26.1
	30RB250	893.3	276.3	38.4	845.6	298.9	36.3	794.1	323.9	34.1	737.4	351.3	31.7	675.2	381.0	29.0
	30RB275	977.0	302.0	42.0	924.8	326.6	39.7	868.7	353.7	37.3	807.8	383.6	34.7	740.3	416.0	31.8
	30RB300	1060.9	329.3	45.6	1004.2	355.9	43.1	943.5	385.5	40.5	877.7	417.9	37.7	805.7	453.3	34.6
	30RB315	1149.5	350.0	49.4	1088.0	378.5	46.7	1020.7	409.9	43.8	947.8	444.4	40.7	867.9	482.1	37.3
	30RB330	1200.5	368.1	51.6	1135.7	398.1	48.8	1065.4	431.3	45.8	989.1	467.7	42.5	905.1	507.3	38.9
	30RB345	1251.6	386.2	53.7	1183.3	417.8	50.8	1110.2	452.7	47.7	1030.3	490.9	44.2	942.2	532.4	40.5
	30RB360	1334.3	412.8	57.3	1261.7	446.3	54.2	1184.0	483.5	50.8	1099.7	524.1	47.2	1006.9	568.4	43.2
	30RB390	1417.0	439.5	60.8	1340.0	474.9	57.5	1257.8	514.2	54.0	1169.0	557.4	50.2	1071.6	604.4	46.0

LEGEND

LCWT — Leaving Chilled Water Temperature

NOTE: Ratings are for standard chillers with no options.

30RB PACKAGED AIR-COOLED CHILLER RATINGS TABLE — SI (cont)

LCWT (C)	UNIT SIZE	CONDENSER ENTERING AIR TEMPERATURE (C)														
		30.0			35.0			40.0			45.0			50.0		
		Cap. (kW)	Input kW	Cooler Flow Rate (L/s)	Cap. (kW)	Input kW	Cooler Flow Rate (L/s)	Cap. (kW)	Input kW	Cooler Flow Rate (L/s)	Cap. (kW)	Input kW	Cooler Flow Rate (L/s)	Cap. (kW)	Input kW	Cooler Flow Rate (L/s)
8.0	30RB060	222.2	66.4	9.5	210.0	71.7	9.0	197.0	77.4	8.5	182.8	83.8	7.9	167.4	91.0	7.2
	30RB070	258.0	78.4	11.1	243.8	84.7	10.5	228.9	91.7	9.8	212.8	99.6	9.2	195.4	108.2	8.4
	30RB080	297.4	89.5	12.8	280.2	96.8	12.0	261.5	105.0	11.2	241.5	114.0	10.4	219.7	123.8	9.4
	30RB090	335.7	100.5	14.4	317.5	108.3	13.6	298.1	116.9	12.8	277.3	126.5	11.9	254.3	137.4	10.9
	30RB100	371.3	112.5	16.0	351.1	121.3	15.1	329.7	131.1	14.2	306.8	142.3	13.2	281.9	154.6	12.1
	30RB110	409.1	124.2	17.6	386.6	134.1	16.6	362.6	145.4	15.6	336.9	157.8	14.5	308.9	171.6	13.3
	30RB120	458.9	138.5	19.7	434.0	149.7	18.6	407.6	162.1	17.5	379.3	175.7	16.3	347.8	190.8	14.9
	30RB130	494.2	148.1	21.2	467.1	160.1	20.1	438.1	173.5	18.8	407.0	188.2	17.5	373.0	204.2	16.0
	30RB150	562.2	168.0	24.2	531.3	181.7	22.8	497.8	196.8	21.4	461.4	213.3	19.8	421.5	231.2	18.1
	30RB160	594.1	176.6	25.5	562.4	190.9	24.2	528.2	206.7	22.7	490.7	224.0	21.1	449.5	242.9	19.3
	30RB170	646.9	195.0	27.8	611.7	210.9	26.3	574.0	228.4	24.7	533.2	247.6	22.9	487.8	268.5	21.0
	30RB190	732.1	221.8	31.4	692.4	239.6	29.8	650.0	259.4	27.9	604.4	281.0	26.0	554.3	304.6	23.8
	30RB210	784.4	232.9	33.7	742.2	251.9	31.9	696.5	272.9	29.9	647.0	295.9	27.8	592.4	320.9	25.5
	30RB225	832.8	251.1	35.8	788.3	271.7	33.9	739.4	294.4	31.8	686.5	319.2	29.5	628.2	346.2	27.0
	30RB250	923.4	279.0	39.7	874.1	301.8	37.6	821.0	326.9	35.3	762.9	354.4	32.8	698.7	384.3	30.0
	30RB275	1009.6	304.9	43.4	955.7	329.6	41.1	897.8	356.9	38.6	835.1	386.9	35.9	765.9	419.5	32.9
	30RB300	1096.2	332.4	47.1	1037.7	359.1	44.6	975.0	388.8	41.9	907.2	421.4	39.0	832.9	456.9	35.8
	30RB315	1188.2	353.2	51.1	1124.9	381.8	48.3	1056.3	413.4	45.4	981.3	448.1	42.2	899.0	485.9	38.6
	30RB330	1240.9	371.6	53.3	1174.1	401.8	50.4	1102.1	435.1	47.4	1023.8	471.7	44.0	937.3	511.4	40.3
	30RB345	1293.7	390.0	55.6	1223.3	421.7	52.6	1148.0	456.8	49.3	1066.4	495.3	45.8	975.5	536.9	41.9
	30RB360	1378.9	416.8	59.2	1304.1	450.5	56.0	1224.0	487.8	52.6	1137.6	528.7	48.9	1042.1	573.1	44.8
	30RB390	1464.1	443.6	62.9	1384.8	479.2	59.5	1300.1	518.7	55.9	1208.8	562.1	51.9	1108.7	609.3	47.6
10.0	30RB060	237.2	68.1	10.2	224.3	73.4	9.6	210.6	79.3	9.1	195.9	85.6	8.4	179.8	92.5	7.7
	30RB070	274.4	80.4	11.8	259.4	86.8	11.2	243.6	93.8	10.5	226.7	101.5	9.8	208.5	110.0	9.0
	30RB080	316.8	92.6	13.6	299.2	99.7	12.9	280.6	107.5	12.1	259.7	116.4	11.2	236.5	126.3	10.2
	30RB090	357.7	103.0	15.4	338.3	110.9	14.5	317.7	119.6	13.7	295.8	129.1	12.7	271.9	139.4	11.7
	30RB100	394.9	115.3	17.0	373.4	124.3	16.1	350.7	134.2	15.1	326.6	145.0	14.0	300.5	156.9	12.9
	30RB110	435.1	127.9	18.7	411.3	138.0	17.7	386.1	149.1	16.6	358.9	161.0	15.4	329.4	174.6	14.2
	30RB120	487.7	141.5	21.0	461.4	152.9	19.8	433.5	165.5	18.7	403.7	179.2	17.4	371.0	194.1	16.0
	30RB130	526.8	150.9	22.7	498.1	163.0	21.4	467.5	176.5	20.1	434.6	191.3	18.7	398.7	207.5	17.2
	30RB150	601.1	171.8	25.9	568.3	185.6	24.4	532.9	200.9	22.9	494.1	217.5	21.2	451.6	235.5	19.4
	30RB160	634.6	179.9	27.3	601.0	194.4	25.8	564.8	210.4	24.3	525.3	227.9	22.6	481.6	246.8	20.7
	30RB170	690.8	199.1	29.7	653.5	215.0	28.1	613.3	232.8	26.4	570.0	252.1	24.5	522.2	273.1	22.5
	30RB190	781.4	226.2	33.6	739.2	244.2	31.8	694.1	264.1	29.9	645.6	285.9	27.8	592.4	309.7	25.5
	30RB210	837.9	237.7	36.0	793.7	256.9	34.1	745.2	278.1	32.1	692.4	301.3	29.8	634.5	326.5	27.3
	30RB225	889.9	256.5	38.2	842.4	277.4	36.2	791.2	300.4	34.0	734.8	325.4	31.6	672.8	352.6	28.9
	30RB250	986.4	284.9	42.4	933.8	307.9	40.1	877.3	333.3	37.7	816.0	361.1	35.1	748.0	391.2	32.2
	30RB275	1078.3	311.1	46.3	1020.8	336.0	43.9	959.1	363.6	41.2	892.4	393.8	38.4	819.2	426.6	35.2
	30RB300	1170.8	339.0	50.3	1108.3	366.0	47.6	1041.5	396.0	44.8	969.3	428.8	41.7	890.4	464.5	38.3
	30RB315	1269.2	359.8	54.6	1202.0	388.8	51.7	1129.6	420.7	48.6	1050.7	455.7	45.2	963.2	493.7	41.4
	30RB330	1325.4	379.0	57.0	1254.5	409.4	54.0	1178.1	443.1	50.7	1095.4	480.0	47.1	1003.8	520.0	43.2
	30RB345	1381.6	398.1	59.4	1306.9	430.1	56.2	1226.6	465.5	52.8	1140.0	504.3	49.0	1044.3	546.3	44.9
	30RB360	1472.2	425.2	63.3	1392.7	459.2	59.9	1307.5	496.8	56.2	1215.6	538.1	52.3	1114.6	582.8	47.9
	30RB390	1562.8	452.3	67.2	1478.4	488.3	63.6	1388.3	528.2	59.7	1291.2	571.9	55.5	1184.9	619.3	51.0

LEGEND

LCWT — Leaving Chilled Water Temperature

NOTE: Ratings are for standard chillers with no options.

Typical piping and wiring

30RB UNITS WITHOUT HYDRONIC PACKAGE

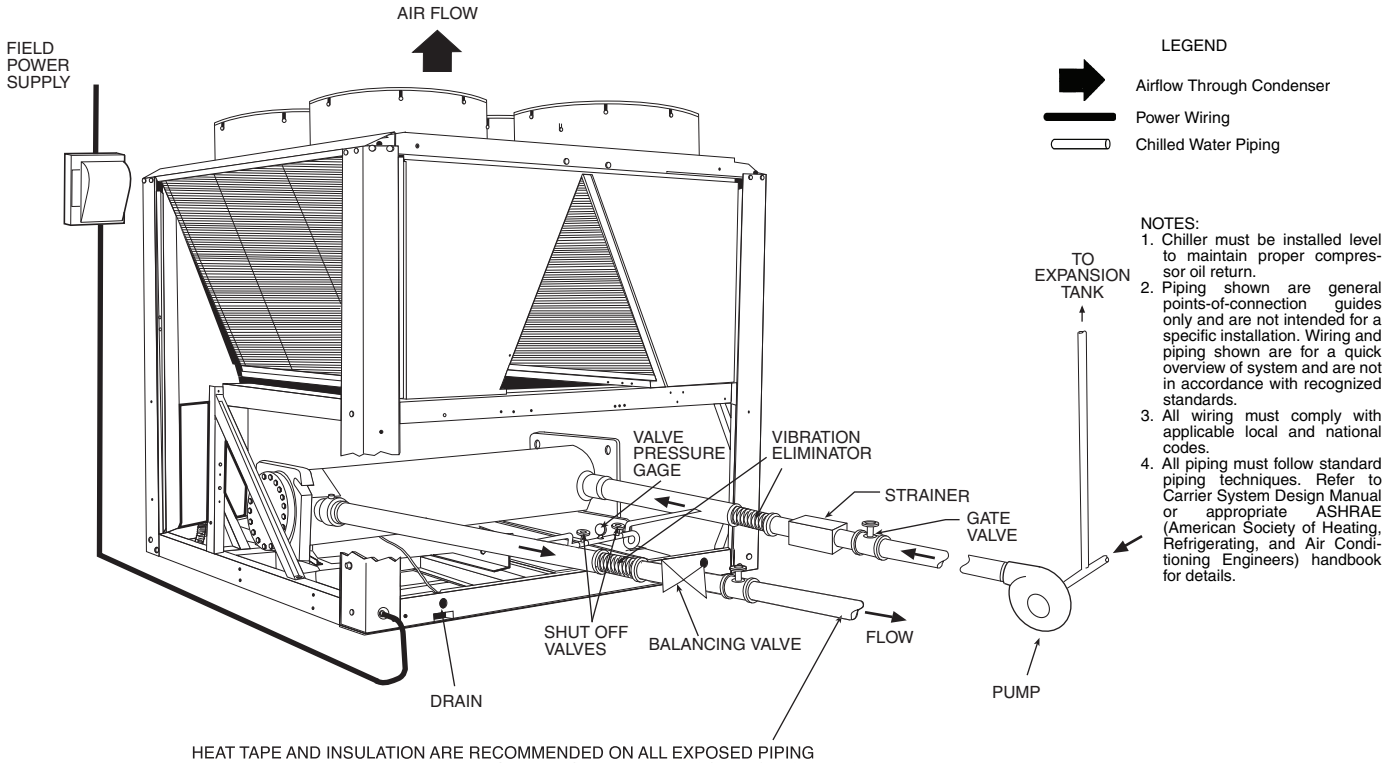

NOTES:
1. Chiller must be installed level to maintain proper compressor oil return.
2. Piping shown are general points-of-connection guides only and are not intended for a specific installation. Wiring and piping shown are for a quick overview of system and are not in accordance with recognized standards.
3. All wiring must comply with applicable local and national codes.
4. All piping must follow standard piping techniques. Refer to Carrier System Design Manual or appropriate ASHRAE (American Society of Heating, Refrigerating, and Air Conditioning Engineers) handbook for details.

30RB UNITS WITH HYDRONIC PACKAGE

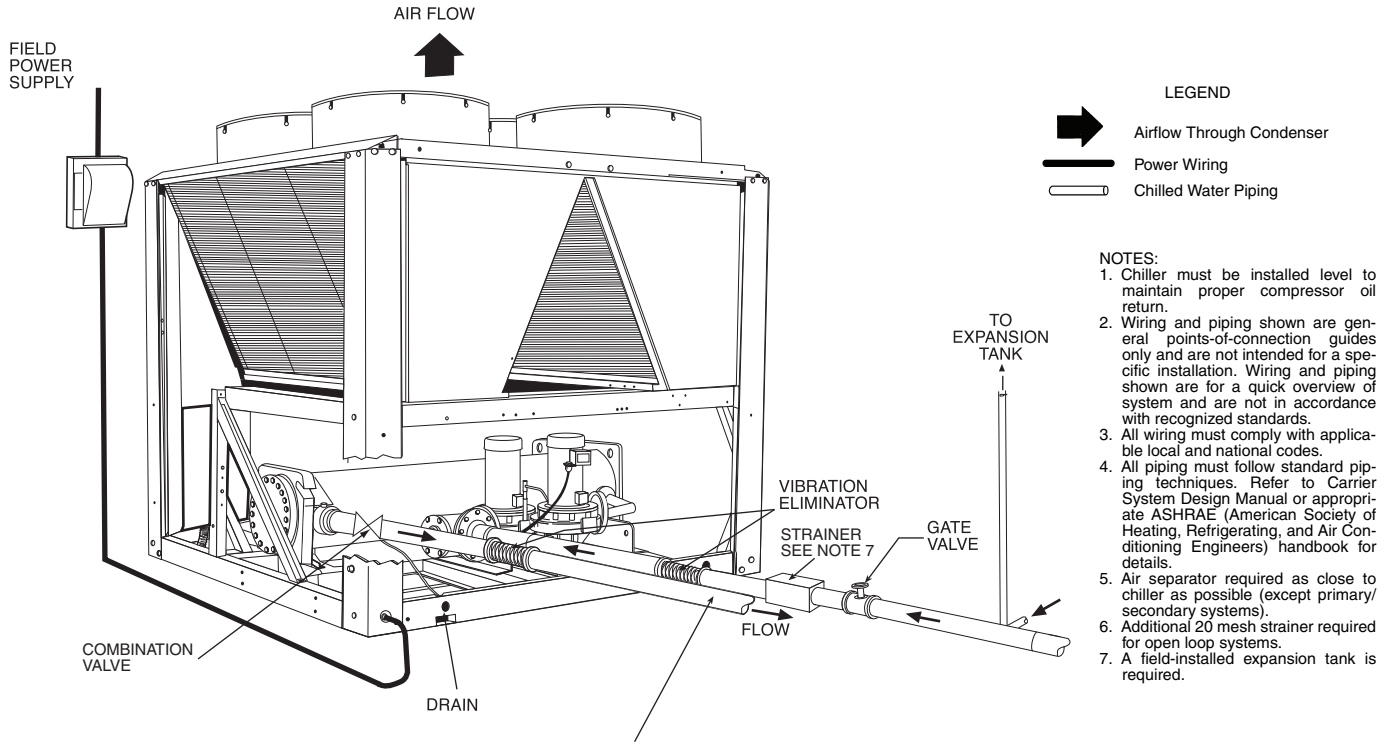

NOTES:
1. Chiller must be installed level to maintain proper compressor oil return.
2. Wiring and piping shown are general points-of-connection guides only and are not intended for a specific installation. Wiring and piping shown are for a quick overview of system and are not in accordance with recognized standards.
3. All wiring must comply with applicable local and national codes.
4. All piping must follow standard piping techniques. Refer to Carrier System Design Manual or appropriate ASHRAE (American Society of Heating, Refrigerating, and Air Conditioning Engineers) handbook for details.
5. Air separator required as close to chiller as possible (except primary/secondary systems).
6. Additional 20 mesh strainer required for open loop systems.
7. A field-installed expansion tank is required.

30RB UNITS WITH HEAT RECLAIM OPTION — SIZES 060-110

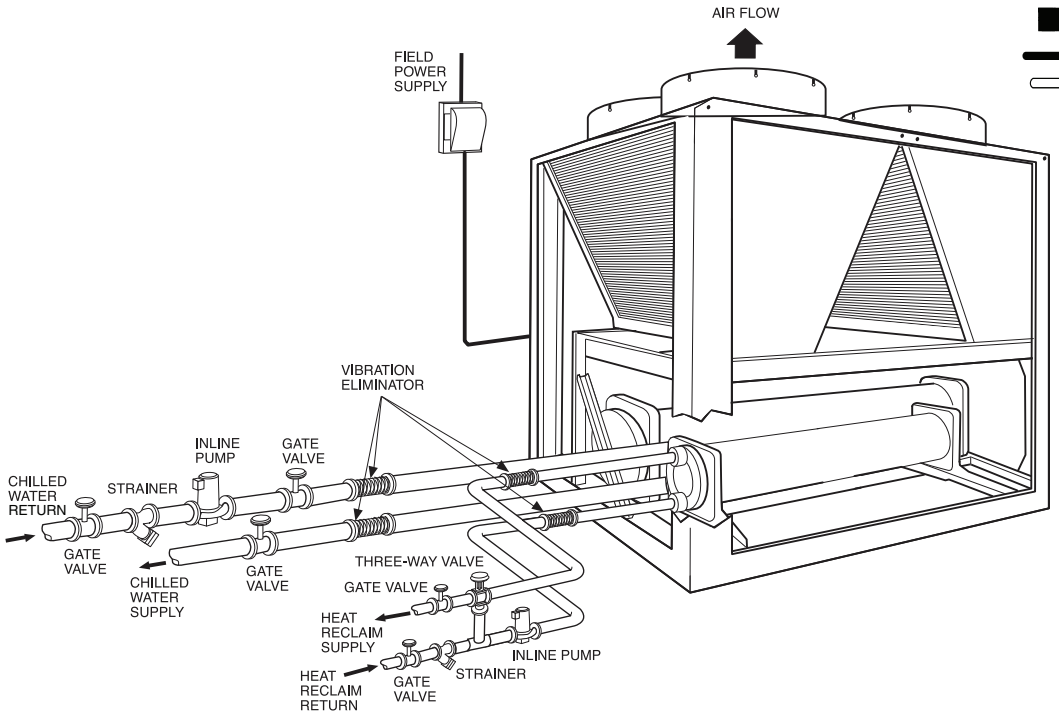

LEGEND

- Airflow Through Condenser
- Power Wiring
- Chilled Water Piping

NOTES:
1. Chiller must be installed level to maintain proper compressor oil return.
2. Piping shown are general points-of-connection guides only and are not intended for a specific installation. Wiring and piping shown are for a quick overview of system and are not in accordance with recognized standards.
3. All wiring must comply with applicable local and national codes.
4. All piping must follow standard piping techniques. Refer to Carrier System Design Manual or appropriate ASHRAE (American Society of Heating, Refrigerating, and Air Conditioning Engineers) handbook for details.

30RB UNITS WITH HEAT RECLAIM OPTION — SIZES 120-190

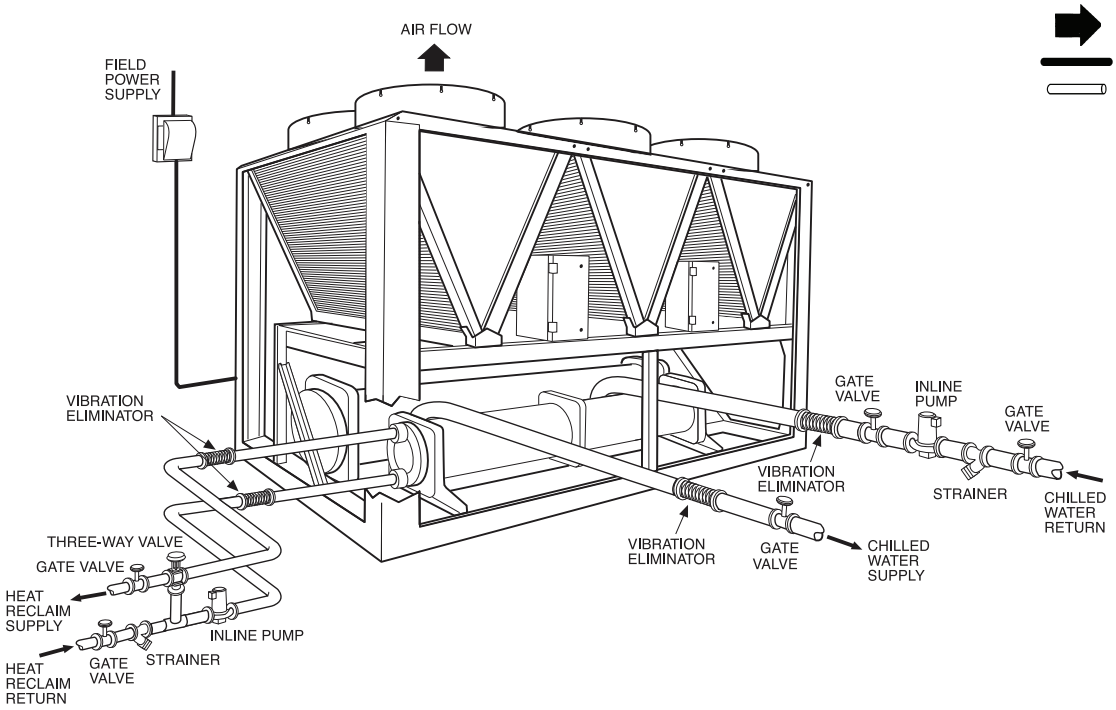

LEGEND

- Airflow Through Condenser
- Power Wiring
- Chilled Water Piping

NOTES:
1. Chiller must be installed level to maintain proper compressor oil return.
2. Wiring and piping shown are general points-of-connection guides only and are not intended for a specific installation. Wiring and piping shown are for a quick overview of system and are not in accordance with recognized standards.
3. All wiring must comply with applicable local and national codes.
4. All piping must follow standard piping techniques. Refer to Carrier System Design Manual or appropriate ASHRAE (American Society of Heating, Refrigerating, and Air Conditioning Engineers) handbook for details.

Typical piping and wiring (cont)

TYPICAL PIPING DIAGRAM FOR 30RB UNITS WITHOUT HYDRONIC PACKAGE

LEGEND

D — Drain, 3/4-in. NPT
FS — Flow Switch
PP — Pipe Plug, 1/4-in. NPT
T1 — Leaving Water Thermistor
T2 — Entering Water Thermistor
V — Vent, 1/4-in. NPT

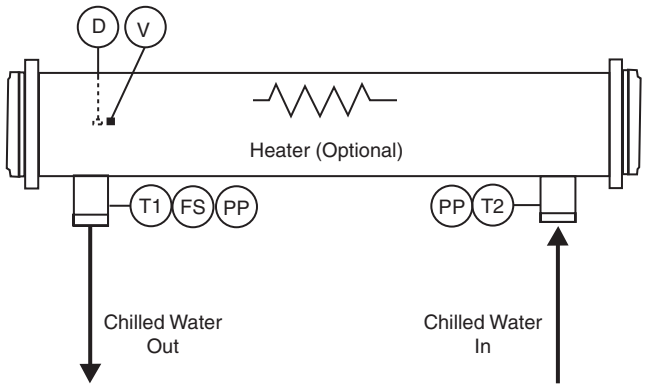

TYPICAL PIPING DIAGRAM FOR 30RB UNITS WITH HYDRONIC PACKAGE — SINGLE PUMP

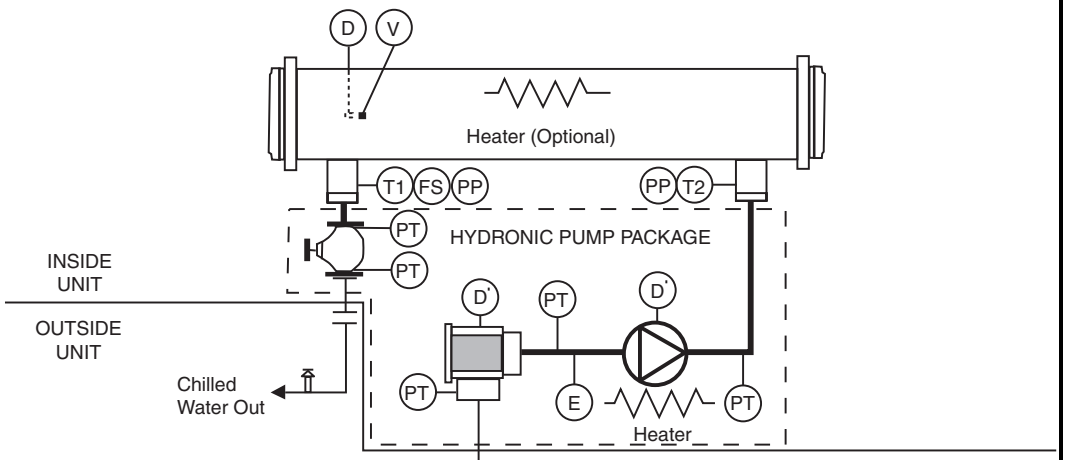

LEGEND

D — Drain, 3/4-in. NPT
D′ — Drain, 1/4-in. NPT
E — Expansion Tank Connection, 3/4-in. NPT
FS — Flow Switch
PP — Pipe Plug, 1/4-in. NPT
PT — Pressure/Temperature Tap
T1 — Leaving Water Thermistor
T2 — Entering Water Thermistor
V — Vent, 1/4-in. NPT
– – – – Indicates items provided with the optional hydronic pump package.

*Field-supplied and installed.
†Factory-installed option.
**Required for open loop systems.

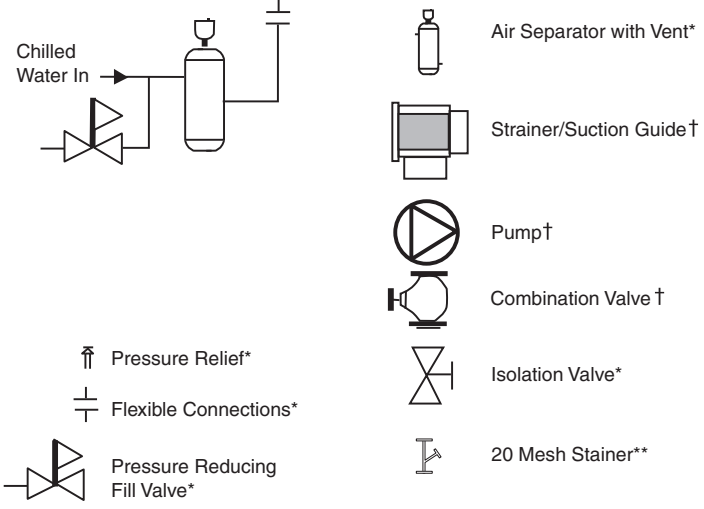

TYPICAL PIPING DIAGRAM FOR 30RB UNITS WITH HYDRONIC PACKAGE — DUAL PUMPS

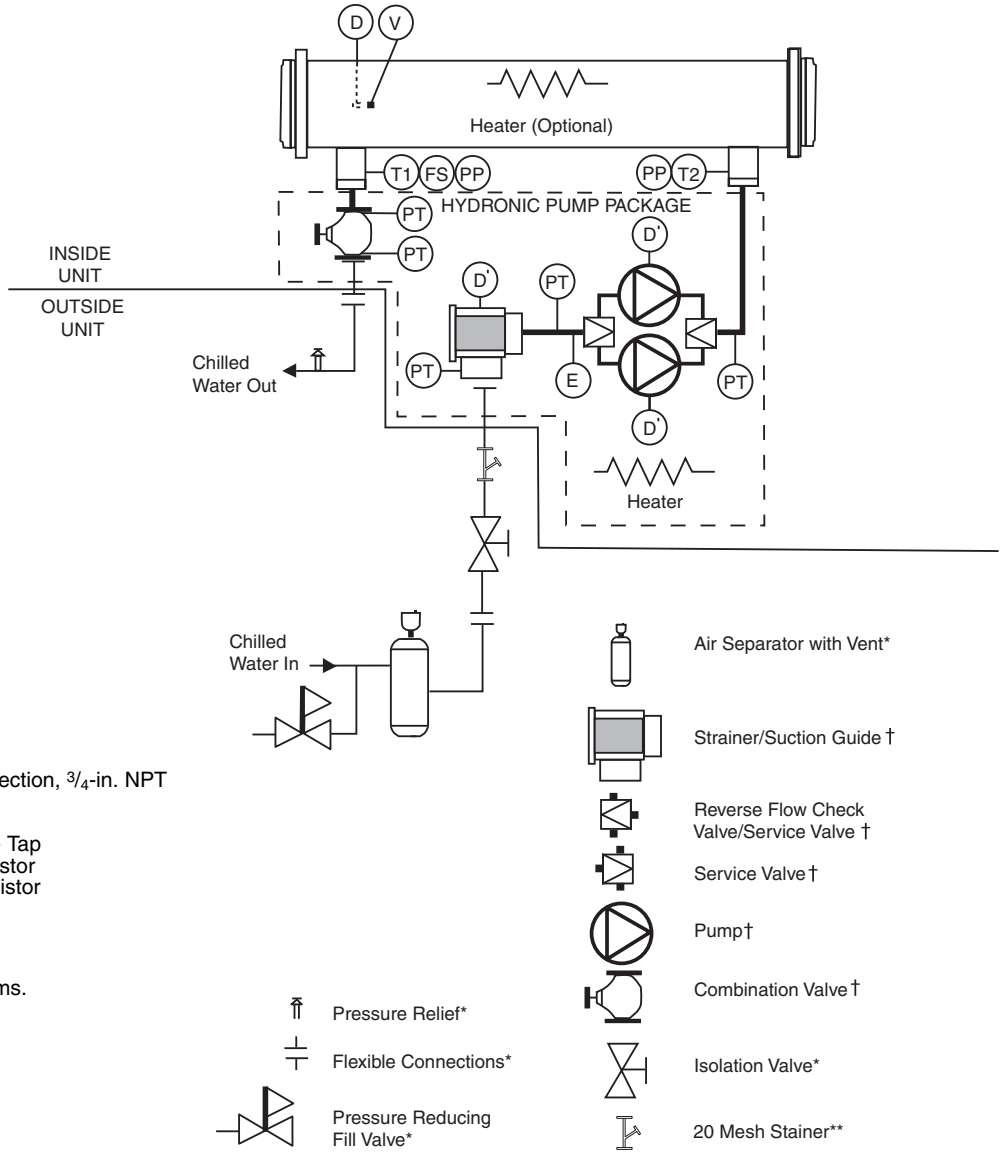

LEGEND

D — Drain, $^3/_4$-in. NPT
D′ — Drain, $^1/_4$-in. NPT
E — Expansion Tank Connection, $^3/_4$-in. NPT
FS — Flow Switch
PP — Pipe Plug, $^1/_4$-in. NPT
PT — Pressure/Temperature Tap
T1 — Leaving Water Thermistor
T2 — Entering Water Thermistor
V — Vent, $^1/_4$-in. NPT

*Field-supplied and installed.
†Factory-installed option.
**Required for open loop systems.

Typical piping and wiring (cont)

TYPICAL PIPING DIAGRAM FOR 30RB UNITS WITH HEAT RECLAIM OPTION

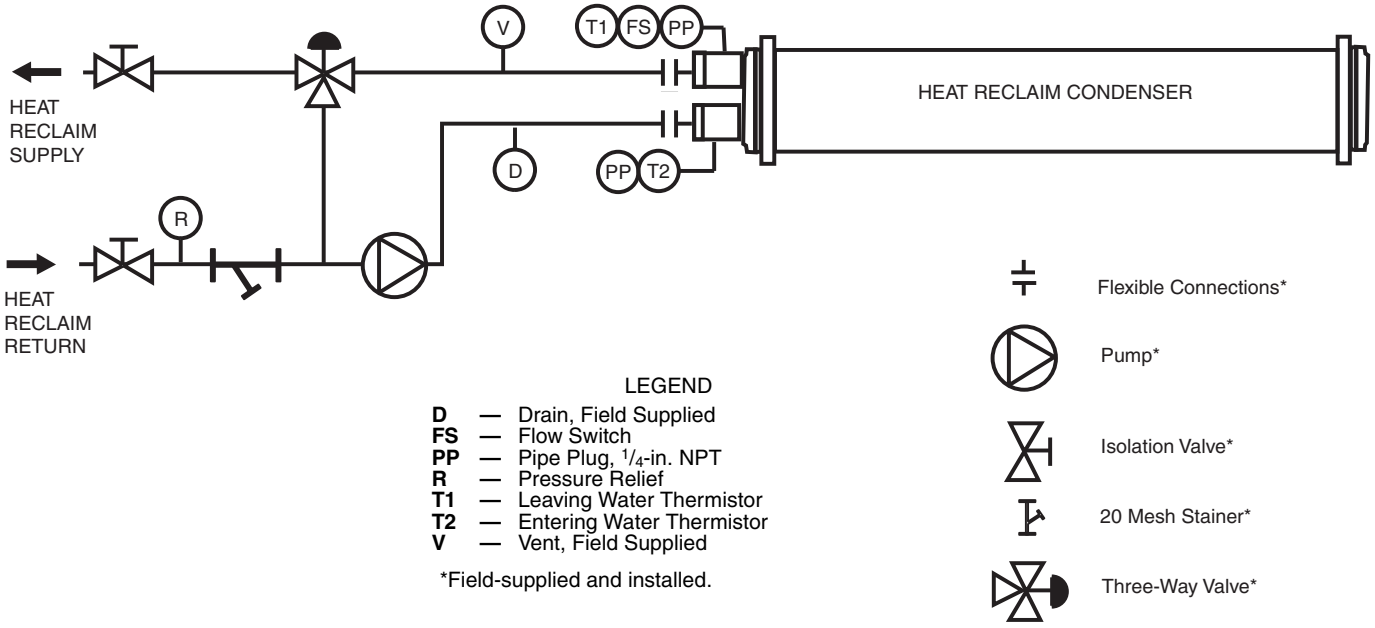

LEGEND

D — Drain, Field Supplied
FS — Flow Switch
PP — Pipe Plug, 1/4-in. NPT
R — Pressure Relief
T1 — Leaving Water Thermistor
T2 — Entering Water Thermistor
V — Vent, Field Supplied

*Field-supplied and installed.

Electrical data

30RB ELECTRICAL DATA — SINGLE POINT UNITS

UNIT 30RB	UNIT VOLTAGE			NO HYDRONIC PACKAGE				3 HP PUMP, 1750 RPM				5 HP PUMP, 1750 RPM			
	V-Hz (3 Ph)	Supplied		MCA	MOCP	ICF	Rec Fuse Size	MCA	MOCP	ICF	Rec Fuse Size	MCA	MOCP	ICF	Rec Fuse Size
		Min	Max	XL	XL	XL		XL	XL	XL		XL	XL	XL	
060	208/230-60	187	253	291.5	350	682.8	350	302.4	350	693.6	350	309.2	350	700.5	350
	380-60	342	418	150.9	175	362.9	175	156.9	175	368.8	175	160.6	175	372.6	175
	460-60	414	506	127.9	150	302.0	150	132.8	150	306.9	150	135.9	150	310.0	150
	575-60	518	633	102.4	125	244.7	110	106.4	125	248.6	125	108.8	125	251.1	125
070	208/230-60	187	253	334.7	400	777.0	400	345.6	400	787.8	400	352.4	400	794.7	400
	380-60	342	418	175.5	200	428.8	200	181.4	225	434.7	200	185.2	225	438.5	200
	460-60	414	506	147.9	175	355.9	175	152.8	175	360.8	175	155.9	175	363.9	175
	575-60	518	633	119.8	150	287.4	150	123.7	150	291.3	150	126.2	150	293.8	150
080	208/230-60	187	253	366.5	400	757.8	400	—	—	—	—	384.2	450	775.5	450
	380-60	342	418	189.3	225	401.3	200	—	—	—	—	199.0	225	411.0	225
	460-60	414	506	160.6	175	334.7	175	—	—	—	—	168.6	200	342.7	200
	575-60	518	633	128.6	150	270.9	150	—	—	—	—	135.0	150	277.3	150
090	208/230-60	187	253	433.6	500	875.9	500	—	—	—	—	451.3	500	893.6	500
	380-60	342	418	226.9	250	480.3	250	—	—	—	—	236.6	250	490.0	250
	460-60	414	506	191.4	225	399.4	225	—	—	—	—	199.4	225	407.4	225
	575-60	518	633	154.6	175	322.2	175	—	—	—	—	161.0	175	328.6	175
100	208/230-60	187	253	472.0	500	914.3	500	—	—	—	—	489.7	500	932.0	500
	380-60	342	418	248.7	250	502.1	250	—	—	—	—	258.4	300	511.8	300
	460-60	414	506	209.2	250	417.2	225	—	—	—	—	217.2	250	425.2	250
	575-60	518	633	170.0	200	337.6	200	—	—	—	—	176.4	200	344.0	200
110	208/230-60	187	253	508.6	600	950.9	600	—	—	—	—	526.3	600	968.6	600
	380-60	342	418	265.3	300	518.7	300	—	—	—	—	275.0	300	528.4	300
	460-60	414	506	224.1	250	432.1	250	—	—	—	—	232.1	250	440.1	250
	575-60	518	633	180.8	200	348.4	200	—	—	—	—	187.2	200	354.8	200
120	208/230-60	187	253	578.1	600	1020.4	600	—	—	—	—	595.8	600	1038.1	600
	380-60	342	418	304.6	350	538.0	350	—	—	—	—	314.3	350	567.6	350
	460-60	414	506	256.2	300	464.2	300	—	—	—	—	264.2	300	472.2	300
	575-60	518	633	208.2	225	325.8	225	—	—	—	—	214.6	225	382.2	250
130	208/230-60	187	253	626.7	700	1068.9	700	—	—	—	—	644.4	700	1086.6	700
	380-60	342	418	327.7	350	581.1	350	—	—	—	—	337.4	350	590.8	350
	460-60	414	506	276.5	300	484.5	300	—	—	—	—	284.5	300	492.5	300
	575-60	518	633	223.3	250	391.0	250	—	—	—	—	229.7	250	397.4	250
150	208/230-60	187	253	684.3	700	1126.5	700	—	—	—	—	702.0	800	1144.2	800
	380-60	342	418	360.4	400	613.8	400	—	—	—	—	370.1	400	623.5	400
	460-60	414	506	303.2	350	511.2	350	—	—	—	—	311.2	350	519.2	350
	575-60	518	633	246.4	250	414.1	250	—	—	—	—	252.8	300	420.5	300
160	208/230-60	187	253	744.8	800	1187.0	800	—	—	—	—	762.5	800	1204.7	800
	380-60	342	418	390.1	400	643.5	400	—	—	—	—	399.8	400	653.2	400
	460-60	414	506	328.9	350	536.9	350	—	—	—	—	336.9	350	544.9	350
	575-60	518	633	265.9	300	433.5	300	—	—	—	—	272.3	300	439.9	300
170	208/230-60	187	253	802.4	1000	1244.6	1000	—	—	—	—	820.1	1000	1262.3	1000
	380-60	342	418	422.8	450	676.2	450	—	—	—	—	432.5	450	685.9	450
	460-60	414	506	355.6	400	563.6	400	—	—	—	—	363.6	400	571.6	400
	575-60	518	633	289.0	300	456.6	300	—	—	—	—	295.4	300	463.0	300
190	208/230-60	187	253	920.5	1000	1362.7	1000	—	—	—	—	938.2	1000	1380.4	1000
	380-60	342	418	485.2	500	738.5	500	—	—	—	—	494.9	500	748.2	500
	460-60	414	506	408.0	450	616.0	450	—	—	—	—	416.0	450	624.0	450
	575-60	518	633	331.5	350	499.1	350	—	—	—	—	337.9	350	505.5	350
210	208/230-60	187	253	—	—	—	—	—	—	—	—	—	—	—	—
	380-60	342	418	501.8	600	755.1	600	—	—	—	—	—	—	—	—
	460-60	414	506	422.9	450	630.9	450	—	—	—	—	—	—	—	—
	575-60	518	633	342.3	350	509.9	350	—	—	—	—	—	—	—	—
225	208/230-60	187	253	—	—	—	—	—	—	—	—	—	—	—	—
	380-60	342	418	534.5	600	787.8	600	—	—	—	—	—	—	—	—
	460-60	414	506	449.6	450	657.6	450	—	—	—	—	—	—	—	—
	575-60	518	633	365.4	400	533.0	400	—	—	—	—	—	—	—	—
250	208/230-60	187	253	—	—	—	—	—	—	—	—	—	—	—	—
	380-60	342	418	596.8	600	850.2	600	—	—	—	—	—	—	—	—
	460-60	414	506	502.0	600	710.0	600	—	—	—	—	—	—	—	—
	575-60	518	633	408.0	450	575.6	450	—	—	—	—	—	—	—	—
275	208/230-60	187	253	—	—	—	—	—	—	—	—	—	—	—	—
	380-60	342	418	659.2	700	912.6	700	—	—	—	—	—	—	—	—
	460-60	414	506	554.4	600	762.4	600	—	—	—	—	—	—	—	—
	575-60	518	633	450.5	500	618.1	500	—	—	—	—	—	—	—	—
300	208/230-60	187	253	—	—	—	—	—	—	—	—	—	—	—	—
	380-60	342	418	721.6	800	975.0	800	—	—	—	—	—	—	—	—
	460-60	414	506	606.8	700	814.8	700	—	—	—	—	—	—	—	—
	575-60	518	633	493.0	500	660.7	500	—	—	—	—	—	—	—	—

LEGEND

ICF — Instantaneous Current Flow
MCA — Minimum Circuit Amps
MOCP — Maximum Overcurrent Protection
XL — Across-the-Line Start

NOTES:

1. Units are suitable for use on electrical systems where voltage supplied to the unit terminals is not below or above the listed minimum and maximum limits. Maximum allowable phase imbalance is: voltage, 2%; amps 10%.
2. All units or modules have single point primary power connection. (Each unit or module requires its own power supply.) Main power must be supplied from a field-supplied disconnect.
3. Cooler heater is wired into the control circuit so it is always operable as long as the power supply disconnect is on, even if any safety device is open.
4. For MCA that is less than or equal to 380 amps, 3 conductors are required.
   For MCA between 381 and 760 amps, 6 conductors are required.
   For MCA between 761 and 1140 amps, 9 conductors are required.
   For MCA between 1141 and 1520 amps, 12 conductors are required.
   Calculation of conductors required is based on 75 C copper wire.
5. Wiring for main field supply must be rated 75 C minimum. Use copper for all units.
   a. Incoming wire size range for the terminal block is no. 4 AWG (American Wire Gage) to 500 kcmil.
   b. Incoming wire size range of non-fused disconnect with MCA up to 599.9 amps is 3/0 to 500 kcmil.
   c. Incoming wire size range of non-fused disconnect with MCA from 600 to 799.9 amps is 1/0 to 500 kcmil.
   d. Incoming wire size range of non-fused disconnect with MCA from 800 to 1199.9 amps is 250 kcmil to 500 kcmil.
6. Hydronic pump packages are not available as a factory-installed option for units 30RB210-390.
7. Power draw includes both crankcase heaters and cooler heaters (where used). Each compressor has a crankcase heater which draws 56 watts of power. Units ordered with the cooler heater option have 1 (060-150) or 2 (160-300) cooler heaters, 825 watts each.

208/230
460
575 v only

Electrical data (cont)

30RB ELECTRICAL DATA — SINGLE POINT UNITS (cont)

UNIT 30RB		UNIT VOLTAGE			NO HYDRONIC PACKAGE				3 HP PUMP, 1750 RPM				5 HP PUMP, 1750 RPM			
		V-Hz (3 Ph)	Supplied		MCA	MOCP	ICF	Rec Fuse Size	MCA	MOCP	ICF	Rec Fuse Size	MCA	MOCP	ICF	Rec Fuse Size
			Min	Max	XL	XL	XL		XL	XL	XL		XL	XL	XL	
315	A	208/230-60	187	253	744.8	800	1187.0	800	—	—	—	—	—	—	—	—
		380-60	342	418	390.1	400	643.5	400	—	—	—	—	—	—	—	—
		460-60	414	506	328.9	350	536.9	350	—	—	—	—	—	—	—	—
		575-60	518	633	265.9	300	433.5	300	—	—	—	—	—	—	—	—
	B	208/230-60	187	253	744.8	800	1187.0	800	—	—	—	—	—	—	—	—
		380-60	342	418	390.1	400	643.5	400	—	—	—	—	—	—	—	—
		460-60	414	506	328.9	350	536.9	350	—	—	—	—	—	—	—	—
		575-60	518	633	265.9	300	433.5	300	—	—	—	—	—	—	—	—
330	A	208/230-60	187	253	802.4	1000	1244.6	1000	—	—	—	—	—	—	—	—
		380-60	342	418	422.8	450	676.2	450	—	—	—	—	—	—	—	—
		460-60	414	506	355.6	400	563.6	400	—	—	—	—	—	—	—	—
		575-60	518	633	289.0	300	456.6	300	—	—	—	—	—	—	—	—
	B	208/230-60	187	253	744.8	800	1187.0	800	—	—	—	—	—	—	—	—
		380-60	342	418	390.1	400	643.5	400	—	—	—	—	—	—	—	—
		460-60	414	506	328.9	350	536.9	350	—	—	—	—	—	—	—	—
		575-60	518	633	265.9	300	433.5	300	—	—	—	—	—	—	—	—
345	A	208/230-60	187	253	802.4	1000	1244.6	1000	—	—	—	—	—	—	—	—
		380-60	342	418	422.8	450	676.2	450	—	—	—	—	—	—	—	—
		460-60	414	506	355.6	400	563.6	400	—	—	—	—	—	—	—	—
		575-60	518	633	289.0	300	456.6	300	—	—	—	—	—	—	—	—
	B	208/230-60	187	253	802.4	1000	1244.6	1000	—	—	—	—	—	—	—	—
		380-60	342	418	422.8	450	676.2	450	—	—	—	—	—	—	—	—
		460-60	414	506	355.6	400	563.6	400	—	—	—	—	—	—	—	—
		575-60	518	633	289.0	300	456.6	300	—	—	—	—	—	—	—	—
360	A	208/230-60	187	253	920.5	1000	1362.7	1000	—	—	—	—	—	—	—	—
		380-60	342	418	485.2	500	738.5	500	—	—	—	—	—	—	—	—
		460-60	414	506	408.0	450	616.0	450	—	—	—	—	—	—	—	—
		575-60	518	633	331.5	350	499.1	350	—	—	—	—	—	—	—	—
	B	208/230-60	187	253	802.4	1000	1244.6	1000	—	—	—	—	—	—	—	—
		380-60	342	418	422.8	450	676.2	450	—	—	—	—	—	—	—	—
		460-60	414	506	355.6	400	563.6	400	—	—	—	—	—	—	—	—
		575-60	518	633	289.0	300	456.6	300	—	—	—	—	—	—	—	—
390	A	208/230-60	187	253	920.5	1000	1362.7	1000	—	—	—	—	—	—	—	—
		380-60	342	418	485.2	500	738.5	500	—	—	—	—	—	—	—	—
		460-60	414	506	408.0	450	616.0	450	—	—	—	—	—	—	—	—
		575-60	518	633	331.5	350	499.1	350	—	—	—	—	—	—	—	—
	B	208/230-60	187	253	920.5	1000	1362.7	1000	—	—	—	—	—	—	—	—
		380-60	342	418	485.2	500	738.5	500	—	—	—	—	—	—	—	—
		460-60	414	506	408.0	450	616.0	450	—	—	—	—	—	—	—	—
		575-60	518	633	331.5	350	499.1	350	—	—	—	—	—	—	—	—

LEGEND

ICF — Instantaneous Current Flow
MCA — Minimum Circuit Amps
MOCP — Maximum Overcurrent Protection
XL — Across-the-Line Start

NOTES:

1. Units are suitable for use on electrical systems where voltage supplied to the unit terminals is not below or above the listed minimum and maximum limits. Maximum allowable phase imbalance is: voltage, 2%; amps 10%.
2. All units or modules have single point primary power connection. (Each unit or module requires its own power supply.) Main power must be supplied from a field-supplied disconnect.
3. Cooler heater is wired into the control circuit so it is always operable as long as the power supply disconnect is on, even if any safety device is open.
4. For MCA that is less than or equal to 380 amps, 3 conductors are required.
   For MCA between 381 and 760 amps, 6 conductors are required.
   For MCA between 761 and 1140 amps, 9 conductors are required.
   For MCA between 1141 and 1520 amps, 12 conductors are required.
   Calculation of conductors required is based on 75 C copper wire.
5. Wiring for main field supply must be rated 75 C minimum. Use copper for all units.
   a. Incoming wire size range for the terminal block is no. 4 AWG (American Wire Gage) to 500 kcmil.
   b. Incoming wire size range of non-fused disconnect with MCA up to 599.9 amps is 3/0 to 500 kcmil.
   c. Incoming wire size range of non-fused disconnect with MCA from 600 to 799.9 amps is 1/0 to 500 kcmil.
   d. Incoming wire size range of non-fused disconnect with MCA from 800 to 1199.9 amps is 250 kcmil to 500 kcmil.
6. Hydronic pump packages are not available as a factory-installed option for units 30RB210-390.
7. Power draw includes both crankcase heaters and cooler heaters (where used). Each compressor has a crankcase heater which draws 56 watts of power. Units ordered with the cooler heater option have 1 (060-150) or 2 (160-300) cooler heaters, 825 watts each.

208/230
460
575 v only

30RB ELECTRICAL DATA — SINGLE POINT UNITS (cont)

UNIT 30RB	UNIT VOLTAGE			7.5 HP PUMP, 1750/3450 RPM				10 HP PUMP, 3450 RPM				15 HP PUMP, 3450 RPM			
	V-Hz (3 Ph)	Supplied		MCA	MOCP	ICF	Rec Fuse Size	MCA	MOCP	ICF	Rec Fuse Size	MCA	MOCP	ICF	Rec Fuse Size
		Min	Max	XL	XL	XL		XL	XL	XL		XL	XL	XL	
060	208/230-60	187	253	317.2	350	708.5	350	325.1	400	716.4	350	—	—	—	—
	380-60	342	418	165.0	200	376.9	175	169.3	200	381.3	200	—	—	—	—
	460-60	414	506	139.5	150	313.6	150	143.1	175	317.2	175	—	—	—	—
	575-60	518	633	111.7	125	254.0	125	114.6	125	256.9	125	—	—	—	—
070	208/230-60	187	253	360.4	450	802.7	400	368.3	450	810.6	400	—	—	—	—
	380-60	342	418	189.5	225	442.8	225	193.9	225	447.2	225	—	—	—	—
	460-60	414	506	159.5	200	367.5	175	163.1	200	371.1	175	—	—	—	—
	575-60	518	633	129.0	150	296.7	150	131.9	150	299.6	150	—	—	—	—
080	208/230-60	187	253	392.2	450	783.5	450	400.1	450	791.4	450	416.3	450	807.6	450
	380-60	342	418	203.4	225	415.3	225	207.7	225	419.7	225	216.6	250	428.5	250
	460-60	414	506	172.2	200	346.3	200	175.8	200	349.9	200	183.1	200	357.2	200
	575-60	518	633	137.9	150	280.2	150	140.8	150	283.1	150	146.6	150	288.9	150
090	208/230-60	187	253	459.3	500	901.6	500	467.2	500	909.5	500	483.4	500	925.7	500
	380-60	342	418	241.0	250	494.3	250	245.3	250	498.7	250	254.2	300	507.5	300
	460-60	414	506	203.0	225	411.0	225	206.6	225	414.6	225	213.9	250	421.9	225
	575-60	518	633	163.9	175	331.5	175	166.8	200	334.4	200	172.6	200	340.2	200
100	208/230-60	187	253	497.7	500	940.0	500	505.6	600	947.9	600	521.8	600	964.1	600
	380-60	342	418	262.8	300	516.1	300	267.1	300	520.5	300	276.0	300	529.3	300
	460-60	414	506	220.8	250	428.8	250	224.4	250	432.4	250	231.7	250	439.7	250
	575-60	518	633	179.3	200	346.9	200	182.2	200	349.8	200	188.0	200	355.6	200
110	208/230-60	187	253	534.3	600	976.6	600	542.2	600	984.5	600	558.4	600	1000.7	600
	380-60	342	418	279.4	300	532.7	300	283.7	300	537.1	300	292.6	300	545.9	300
	460-60	414	506	235.7	250	443.7	250	239.3	250	447.3	250	246.6	250	454.6	250
	575-60	518	633	190.1	200	357.7	200	193.0	225	360.6	225	198.8	225	366.4	225
120	208/230-60	187	253	603.8	700	1046.1	600	611.8	700	1054.0	700	627.9	700	1070.2	700
	380-60	342	418	318.6	350	572.0	350	323.0	350	576.4	350	331.8	350	585.2	350
	460-60	414	506	267.8	300	425.8	300	271.4	300	479.4	300	278.7	300	486.7	300
	575-60	518	633	217.5	250	385.1	250	220.4	250	388.0	250	226.2	250	393.8	250
130	208/230-60	187	253	652.3	700	1094.6	700	660.3	700	1102.5	700	676.4	700	1118.7	700
	380-60	342	418	341.8	350	595.1	350	346.1	350	599.5	350	355.0	400	608.3	400
	460-60	414	506	288.1	300	496.1	300	291.7	300	499.7	300	299.0	300	507.0	300
	575-60	518	633	232.6	250	400.3	250	235.5	250	403.2	250	241.3	250	409.0	250
150	208/230-60	187	253	709.9	800	1152.2	800	717.9	800	1160.1	800	734.0	800	1176.3	800
	380-60	342	418	374.5	400	627.8	400	378.8	400	632.2	400	387.7	400	641.0	400
	460-60	414	506	314.8	350	522.8	350	318.4	350	526.4	350	325.7	350	533.7	350
	575-60	518	633	255.7	300	423.4	300	258.6	300	426.3	300	264.4	300	432.1	300
160	208/230-60	187	253	770.4	800	1212.7	800	778.4	800	1220.6	800	794.5	800	1236.8	800
	380-60	342	418	404.1	450	657.5	450	408.5	450	661.9	450	417.3	450	670.7	450
	460-60	414	506	340.5	350	548.5	350	344.1	350	552.1	350	351.4	400	559.4	400
	575-60	518	633	275.2	300	442.8	300	278.0	300	445.7	300	283.9	300	451.5	300
170	208/230-60	187	253	828.0	1000	1270.3	1000	836.0	1000	1278.2	1000	852.1	1000	1294.4	1000
	380-60	342	418	436.8	450	690.2	450	441.2	450	694.6	450	450.0	500	703.4	500
	460-60	414	506	367.2	400	575.2	400	370.8	400	578.8	400	378.1	400	586.1	400
	575-60	518	633	298.3	300	465.9	300	301.1	350	468.8	350	307.0	350	474.6	350
190	208/230-60	187	253	946.1	1000	1388.4	1000	954.1	1000	1396.3	1000	970.2	1000	1412.5	1000
	380-60	342	418	499.2	500	752.5	500	503.6	600	756.9	600	512.4	600	765.7	600
	460-60	414	506	419.6	450	627.6	450	423.2	450	631.2	450	430.5	450	638.5	450
	575-60	518	633	340.8	350	508.4	350	343.7	350	511.3	350	349.5	350	517.1	350

LEGEND

ICF — Instantaneous Current Flow
MCA — Minimum Circuit Amps
MOCP — Maximum Overcurrent Protection
XL — Across-the-Line Start

NOTES:

1. Units are suitable for use on electrical systems where voltage supplied to the unit terminals is not below or above the listed minimum and maximum limits. Maximum allowable phase imbalance is: voltage, 2%; amps 10%.
2. All units and modules have single point primary power connection. (Each unit or module requires its own power supply.) Main power must be supplied from a field-supplied disconnect.
3. Cooler heater is wired into the control circuit so it is always operable as long as the power supply disconnect is on, even if any safety device is open.
4. For MCA that is less than or equal to 380 amps, 3 conductors are required.
   For MCA between 381 and 760 amps, 6 conductors are required.
   For MCA between 761 and 1140 amps, 9 conductors are required.
   For MCA between 1141 and 1520 amps, 12 conductors are required.
   Calculation of conductors required is based on 75 C copper wire.
5. Wiring for main field supply must be rated 75 C minimum. Use copper for all units.
   a. Incoming wire size range for the terminal block is no. 4 AWG (American Wire Gage) to 500 kcmil.
   b. Incoming wire size range of non-fused disconnect with MCA up to 599.9 amps is 3/0 to 500 kcmil.
   c. Incoming wire size range of non-fused disconnect with MCA from 600 to 799.9 amps is 1/0 to 500 kcmil.
   d. Incoming wire size range of non-fused disconnect with MCA from 800 to 1199.9 amps is 250 kcmil to 500 kcmil.
6. Hydronic pump packages are not available as a factory-installed option for units 30RB210-390.
7. Power draw includes both crankcase heaters and cooler heaters (where used). Each compressor has a crankcase heater which draws 56 watts of power. Units ordered with the cooler heater option have 1 (060-150) or 2 (160-300) cooler heaters, 825 watts each.

208/230
460
575 v only

Electrical data (cont)

30RB ELECTRICAL DATA — DUAL POINT UNITS

30RB UNIT SIZE	UNIT VOLTAGE			NO HYDRONIC PACKAGE				3 HP PUMP, 1750 RPM				5 HP PUMP, 1750 RPM			
	V-Hz (3 Ph)	Supplied		MCA	MOCP	ICF	Rec Fuse Size	MCA	MOCP	ICF	Rec Fuse Size	MCA	MOCP	ICF	Rec Fuse Size
		Min	Max	XL	XL	XL		XL	XL	XL		XL	XL	XL	
060	208/230-60	187	253	168.8/141.5	225/200	560.0/532.8	200/175	179.6/141.5	250/200	570.8/532.8	200/175	186.4/141.5	250/200	577.7/532.8	225/175
	380-60	342	418	86.4/ 74.1	110/110	298.4/286.1	100/ 90	92.3/ 74.1	125/110	304.3/286.1	110/ 90	96.1/ 74.1	125/110	308.1/286.1	110/ 90
	460-60	414	506	73.6/ 62.5	100/ 90	247.7/236.6	90/ 80	78.5/ 62.5	110/ 90	252.6/236.6	90/ 80	81.6/ 62.5	110/ 90	255.7/236.6	90/ 80
	575-60	518	633	59.0/ 50.0	80/ 70	201.2/192.3	70/ 60	62.9/ 50.0	80/ 70	205.1/192.3	70/ 60	65.4/ 50.0	90/ 70	207.6/192.3	80/ 60
070	208/230-60	187	253	212.0/141.5	300/200	654.2/532.8	250/175	222.8/141.5	300/200	665.0/532.8	250/175	229.6/141.5	300/200	671.9/532.8	300/175
	380-60	342	418	110.9/ 74.1	150/110	364.3/286.1	125/ 90	116.9/ 74.1	150/110	370.2/286.1	150/ 90	120.6/ 74.1	150/110	374.0/286.1	150/ 90
	460-60	414	506	93.6/ 62.5	125/ 90	301.6/236.6	110/ 80	98.5/ 62.5	125/ 90	306.5/236.6	110/ 80	101.6/ 62.5	125/ 90	309.6/236.6	125/ 80
	575-60	518	633	76.3/ 50.0	110/ 70	243.9/192.3	90/ 60	80.2/ 50.0	110/ 70	247.8/192.3	90/ 60	82.7/ 50.0	110/ 70	250.3/192.3	100/ 60
080	208/230-60	187	253	216.5/168.8	250/225	607.8/560.0	250/200	—	—	—	—	234.2/168.8	300/225	625.5/560.0	300/200
	380-60	342	418	112.5/ 86.4	150/110	324.5/298.4	125/100	—	—	—	—	122.2/ 86.4	150/110	334.2/298.4	150/100
	460-60	414	506	95.2/ 73.6	125/100	269.3/247.7	110/ 90	—	—	—	—	103.2/ 73.6	125/100	277.3/247.7	125/ 90
	575-60	518	633	76.2/ 59.0	100/ 80	218.5/201.2	90/ 70	—	—	—	—	82.6/ 59.0	100/ 80	224.9/201.2	90/ 70
090	208/230-60	187	253	283.6/168.8	350/225	725.9/560.0	350/200	—	—	—	—	301.3/168.8	350/225	743.5/560.0	350/200
	380-60	342	418	150.1/ 86.4	175/110	403.5/298.4	175/100	—	—	—	—	159.8/ 86.4	200/110	413.2/298.4	175/100
	460-60	414	506	126.0/ 73.6	150/100	334.0/247.7	150/ 90	—	—	—	—	134.0/ 73.6	175/100	342.0/247.7	150/ 90
	575-60	518	633	102.2/ 59.0	125/ 80	269.8/201.2	125/ 70	—	—	—	—	108.6/ 59.0	125/ 80	276.2/201.2	125/ 70
100	208/230-60	187	253	283.6/212.0	350/300	725.9/654.2	350/250	—	—	—	—	301.3/212.0	350/300	743.5/654.2	350/250
	380-60	342	418	150.1/110.9	175/150	403.5/364.3	175/125	—	—	—	—	159.8/110.9	200/150	413.2/364.3	175/125
	460-60	414	506	126.0/ 93.6	150/125	334.0/301.6	150/110	—	—	—	—	134.0/ 93.6	175/125	342.0/301.6	150/110
	575-60	518	633	102.2/ 76.3	125/110	269.8/243.9	125/ 90	—	—	—	—	108.6/ 76.3	125/110	276.2/243.9	125/ 90
110	208/230-60	187	253	283.6/243.8	350/300	725.9/635.0	350/300	—	—	—	—	301.3/243.8	350/300	743.5/635.0	350/300
	380-60	342	418	150.1/124.8	175/150	403.5/336.8	175/150	—	—	—	—	159.8/124.8	200/150	413.2/336.8	175/150
	460-60	414	506	126.0/106.3	150/125	334.0/280.4	150/125	—	—	—	—	134.0/106.3	175/125	342.0/280.4	150/125
	575-60	518	633	102.2/ 85.2	125/110	269.8/227.4	125/100	—	—	—	—	108.6/ 85.2	125/110	276.2/227.4	125/100
120	208/230-60	187	253	295.5/306.2	350/400	737.8/748.4	350/350	—	—	—	—	313.2/306.2	400/400	755.5/748.4	350/350
	380-60	342	418	156.7/160.2	200/200	410.1/413.6	175/175	—	—	—	—	166.4/160.2	200/200	419.7/413.6	200/175
	460-60	414	506	131.4/135.2	150/175	339.4/343.2	150/150	—	—	—	—	139.4/135.2	175/175	347.4/343.2	150/150
	575-60	518	633	106.5/110.2	125/125	274.1/277.8	125/125	—	—	—	—	112.9/110.2	125/125	280.5/277.8	125/125
130	208/230-60	187	253	401.7/243.8	450/300	843.9/635.0	450/300	—	—	—	—	419.4/243.8	500/300	861.6/635.0	450/300
	380-60	342	418	212.5/124.8	250/150	465.9/336.8	225/150	—	—	—	—	222.2/124.8	250/150	475.6/336.8	250/150
	460-60	414	506	178.4/106.3	200/125	386.4/280.4	200/125	—	—	—	—	186.4/106.3	225/125	394.4/280.4	200/125
	575-60	518	633	144.7/ 85.2	175/110	312.4/227.4	175/100	—	—	—	—	151.1/ 85.2	175/110	318.8/227.4	175/100
150	208/230-60	187	253	401.7/306.2	450/400	843.9/748.4	450/350	—	—	—	—	419.4/306.2	500/400	861.6/748.4	450/350
	380-60	342	418	212.5/160.2	250/200	465.9/413.6	225/175	—	—	—	—	222.2/160.2	250/200	475.6/413.6	250/175
	460-60	414	506	178.4/135.2	200/175	386.4/343.2	200/150	—	—	—	—	186.4/135.2	225/175	394.4/343.2	200/150
	575-60	518	633	144.7/110.2	175/125	312.4/277.8	175/125	—	—	—	—	151.1/110.2	175/125	318.8/277.8	175/125
160	208/230-60	187	253	519.8/243.8	600/300	962.0/635.0	600/300	—	—	—	—	537.5/243.8	600/300	979.7/635.0	600/300
	380-60	342	418	274.9/124.8	300/150	528.3/336.8	300/150	—	—	—	—	284.6/124.8	300/150	538.0/336.8	300/150
	460-60	414	506	230.8/106.3	250/125	438.8/280.4	250/125	—	—	—	—	238.8/106.3	250/125	446.8/280.4	250/125
	575-60	518	633	187.3/ 85.2	200/110	354.9/227.4	200/100	—	—	—	—	193.7/ 85.2	225/110	361.3/227.4	225/100
170	208/230-60	187	253	519.8/306.2	600/400	962.0/748.4	600/350	—	—	—	—	537.5/306.2	600/400	979.7/748.4	600/350
	380-60	342	418	274.9/160.2	300/200	528.3/413.6	300/175	—	—	—	—	284.6/160.2	300/200	538.0/413.6	300/175
	460-60	414	506	230.8/135.2	250/175	438.8/343.2	250/150	—	—	—	—	238.8/135.2	250/175	446.8/343.2	250/150
	575-60	518	633	187.3/110.2	200/125	354.9/277.8	200/125	—	—	—	—	193.7/110.2	225/125	361.3/277.8	225/125
190	208/230-60	187	253	543.7/400.4	600/450	985.9/842.6	600/450	—	—	—	—	561.4/400.4	600/450	1003.6/842.6	600/450
	380-60	342	418	288.0/209.5	300/250	541.3/462.9	300/225	—	—	—	—	297.7/209.5	300/250	551.0/462.9	300/225
	460-60	414	506	241.6/176.8	250/200	449.6/384.8	250/200	—	—	—	—	249.6/176.8	250/200	457.6/384.8	250/200
	575-60	518	633	195.9/144.1	225/175	363.5/311.7	225/175	—	—	—	—	202.3/144.1	225/175	369.9/311.7	225/175
210	208/230-60	187	253	626.7/353.9	700/400	1068.9/796.2	700/400	—	—	—	—	—	—	—	—
	380-60	342	418	327.7/186.4	350/225	581.1/439.7	350/200	—	—	—	—	—	—	—	—
	460-60	414	506	233.3/200.0	250/225	441.3/408.0	250/225	—	—	—	—	—	—	—	—
	575-60	518	633	188.8/162.0	200/175	356.4/329.6	200/175	—	—	—	—	—	—	—	—
225	208/230-60	187	253	684.3/353.9	700/400	1126.5/796.2	700/400	—	—	—	—	—	—	—	—
	380-60	342	418	360.4/186.4	400/225	613.8/439.7	400/200	—	—	—	—	—	—	—	—
	460-60	414	506	260.0/200.0	300/225	468.0/408.0	300/225	—	—	—	—	—	—	—	—
	575-60	518	633	211.9/162.0	225/175	379.5/329.6	225/175	—	—	—	—	—	—	—	—
250	208/230-60	187	253	684.3/472.0	700/500	1126.5/914.3	700/500	—	—	—	—	—	—	—	—
	380-60	342	418	360.4/248.7	400/250	613.8/502.1	400/250	—	—	—	—	—	—	—	—
	460-60	414	506	303.2/209.2	350/250	511.2/417.2	350/225	—	—	—	—	—	—	—	—
	575-60	518	633	246.4/170.0	250/200	414.1/337.6	250/200	—	—	—	—	—	—	—	—
275	208/230-60	187	253	920.5/353.9	1000/400	1362.7/796.2	1000/400	—	—	—	—	—	—	—	—
	380-60	342	418	485.2/186.4	500/225	738.5/439.7	500/200	—	—	—	—	—	—	—	—
	460-60	414	506	408.0/156.8	450/175	616.0/364.8	450/175	—	—	—	—	—	—	—	—
	575-60	518	633	331.5/127.5	350/150	499.1/295.1	350/150	—	—	—	—	—	—	—	—
300	208/230-60	187	253	920.5/472.0	1000/500	1362.7/914.3	1000/500	—	—	—	—	—	—	—	—
	380-60	342	418	485.2/248.7	500/250	738.5/502.1	500/250	—	—	—	—	—	—	—	—
	460-60	414	506	408.0/209.2	450/250	616.0/417.2	450/225	—	—	—	—	—	—	—	—
	575-60	518	633	331.5/170.0	350/200	499.1/337.6	350/200	—	—	—	—	—	—	—	—

LEGEND

ICF — Instantaneous Current Flow (Ckt1/Ckt2)
MCA — Minimum Circuit Amps (Ckt1/Ckt2)
MOCP — Maximum Overcurrent Protection (Ckt1/Ckt2)
XL — Across-the-Line Start

NOTES:

1. Units are suitable for use on electrical systems where voltage supplied to the unit terminals is not below or above the listed minimum and maximum limits. Maximum allowable phase imbalance is: voltage, 2%; amps 10%.
2. Control power is derived from main power. No separate control power connection is required.
3. Cooler heater is wired into the control circuit so it is always operable as long as the power supply disconnect is on, even if any safety device is open.
4. For MCA that is less than or equal to 380 amps, 3 conductors are required.
   For MCA between 381 and 760 amps, 6 conductors are required.
   For MCA between 761 and 1140 amps, 9 conductors are required.
   For MCA between 1141 and 1520 amps, 12 conductors are required.
   Calculation of conductors required is based on 75 C copper wire.
5. Wiring for main field supply must be rated 75 C minimum. Use copper for all units.
   a. Incoming wire size range for the terminal block is no. 4 AWG (American Wire Gage) to 500 kcmil.
   b. Incoming wire size range of non-fused disconnect with MCA up to 599.9 amps is 3/0 to 500 kcmil.
   c. Incoming wire size range of non-fused disconnect with MCA from 600 to 799.9 amps is 1/0 to 500 kcmil.
   d. Incoming wire size range of non-fused disconnect with MCA from 800 to 1199.9 amps is 250 kcmil to 500 kcmil.
6. Hydronic pump packages are not available as a factory-installed option for units 30RB210-390.
7. Power draw includes both crankcase heaters and cooler heaters (where used). Each compressor has a crankcase heater which draws 56 watts of power. Units ordered with the cooler heater option have 1 (060-150) or 2 (160-300) cooler heaters, 825 watts each.

208/230
460
575 v only

30RB ELECTRICAL DATA — DUAL POINT UNITS (cont)

UNIT 30RB		UNIT VOLTAGE			NO HYDRONIC PACKAGE				3 HP PUMP, 1750 RPM				5 HP PUMP, 1750 RPM			
		V-Hz (3 Ph)	Supplied		MCA	MOCP	ICF	Rec Fuse Size	MCA	MOCP	ICF	Rec Fuse Size	MCA	MOCP	ICF	Rec Fuse Size
			Min	Max	XL	XL	XL		XL	XL	XL		XL	XL	XL	
315	A	208/230-60	187	253	519.8/243.8	600/300	962.0/635.0	600/300	—	—	—	—	—	—	—	—
		380-60	342	418	274.9/124.8	300/150	528.3/336.8	300/150	—	—	—	—	—	—	—	—
		460-60	414	506	230.8/106.3	250/125	438.8/280.4	250/125	—	—	—	—	—	—	—	—
		575-60	518	633	187.3/ 85.2	200/110	354.9/227.4	200/100	—	—	—	—	—	—	—	—
	B	208/230-60	187	253	519.8/243.8	600/300	962.0/635.0	600/300	—	—	—	—	—	—	—	—
		460-60	414	506	230.8/106.3	250/125	438.8/280.4	250/125	—	—	—	—	—	—	—	—
		575-60	518	633	187.3/ 85.2	200/110	354.9/227.4	200/100	—	—	—	—	—	—	—	—
		380-60	342	418	274.9/124.8	300/150	528.3/336.8	300/150	—	—	—	—	—	—	—	—
330	A	208/230-60	187	253	519.8/306.2	600/400	962.0/748.4	600/350	—	—	—	—	—	—	—	—
		380-60	342	418	274.9/160.2	300/200	528.3/413.6	300/175	—	—	—	—	—	—	—	—
		460-60	414	506	230.8/135.2	250/175	438.8/343.2	250/150	—	—	—	—	—	—	—	—
		575-60	518	633	187.3/110.2	200/125	354.9/277.8	200/125	—	—	—	—	—	—	—	—
	B	208/230-60	187	253	519.8/243.8	600/300	962.0/635.0	600/300	—	—	—	—	—	—	—	—
		380-60	342	418	274.9/124.8	300/150	528.3/336.8	300/150	—	—	—	—	—	—	—	—
		460-60	414	506	230.8/106.3	250/125	438.8/280.4	250/125	—	—	—	—	—	—	—	—
		575-60	518	633	187.3/ 85.2	200/110	354.9/227.4	200/100	—	—	—	—	—	—	—	—
345	A	208/230-60	187	253	519.8/306.2	600/400	962.0/748.4	600/350	—	—	—	—	—	—	—	—
		380-60	342	418	274.9/160.2	300/200	528.3/413.6	300/175	—	—	—	—	—	—	—	—
		460-60	414	506	230.8/135.2	250/175	438.8/343.2	250/150	—	—	—	—	—	—	—	—
		575-60	518	633	187.3/110.2	200/125	354.9/277.8	200/125	—	—	—	—	—	—	—	—
	B	208/230-60	187	253	519.8/306.2	600/400	962.0/748.4	600/350	—	—	—	—	—	—	—	—
		380-60	342	418	274.9/160.2	300/200	528.3/413.6	300/175	—	—	—	—	—	—	—	—
		460-60	414	506	230.8/135.2	250/175	438.8/343.2	250/150	—	—	—	—	—	—	—	—
		575-60	518	633	187.3/110.2	200/125	354.9/277.8	200/125	—	—	—	—	—	—	—	—
360	A	208/230-60	187	253	543.7/400.4	600/450	985.9/842.6	600/450	—	—	—	—	—	—	—	—
		380-60	342	418	288.0/209.5	300/250	541.3/462.9	300/225	—	—	—	—	—	—	—	—
		460-60	414	506	241.6/176.8	250/200	449.6/384.8	250/200	—	—	—	—	—	—	—	—
		575-60	518	633	195.9/144.1	225/175	363.5/311.7	225/175	—	—	—	—	—	—	—	—
	B	208/230-60	187	253	519.8/306.2	600/400	962.0/748.4	600/350	—	—	—	—	—	—	—	—
		380-60	342	418	274.9/160.2	300/200	528.3/413.6	300/175	—	—	—	—	—	—	—	—
		460-60	414	506	230.8/135.2	250/175	438.8/343.2	250/150	—	—	—	—	—	—	—	—
		575-60	518	633	187.3/110.2	200/125	354.9/277.8	200/125	—	—	—	—	—	—	—	—
390	A	208/230-60	187	253	543.7/400.4	600/450	985.9/842.6	600/450	—	—	—	—	—	—	—	—
		380-60	342	418	288.0/209.5	300/250	541.3/462.9	300/225	—	—	—	—	—	—	—	—
		460-60	414	506	241.6/176.8	250/200	449.6/384.8	250/200	—	—	—	—	—	—	—	—
		575-60	518	633	195.9/144.1	225/175	363.5/311.7	225/175	—	—	—	—	—	—	—	—
	B	208/230-60	187	253	543.7/400.4	600/450	985.9/842.6	600/450	—	—	—	—	—	—	—	—
		380-60	342	418	288.0/209.5	300/250	541.3/462.9	300/225	—	—	—	—	—	—	—	—
		460-60	414	506	241.6/176.8	250/200	449.6/384.8	250/200	—	—	—	—	—	—	—	—
		575-60	518	633	195.9/144.1	225/175	363.5/311.7	225/175	—	—	—	—	—	—	—	—

LEGEND

ICF — Instantaneous Current Flow (Ckt1/Ckt2)
MCA — Minimum Circuit Amps (Ckt1/Ckt2)
MOCP — Maximum Overcurrent Protection (Ckt1/Ckt2)
XL — Across-the-Line Start

NOTES:

1. Units are suitable for use on electrical systems where voltage supplied to the unit terminals is not below or above the listed minimum and maximum limits. Maximum allowable phase imbalance is: voltage, 2%; amps 10%.
2. Control power is derived from main power. No separate control power connection is required.
3. Cooler heater is wired into the control circuit so it is always operable as long as the power supply disconnect is on, even if any safety device is open.
4. For MCA that is less than or equal to 380 amps, 3 conductors are required.
   For MCA between 381 and 760 amps, 6 conductors are required.
   For MCA between 761 and 1140 amps, 9 conductors are required.
   For MCA between 1141 and 1520 amps, 12 conductors are required.
   Calculation of conductors required is based on 75 C copper wire.
5. Wiring for main field supply must be rated 75 C minimum. Use copper for all units.
   a. Incoming wire size range for the terminal block is no. 4 AWG (American Wire Gage) to 500 kcmil.
   b. Incoming wire size range of non-fused disconnect with MCA up to 599.9 amps is 3/0 to 500 kcmil.
   c. Incoming wire size range of non-fused disconnect with MCA from 600 to 799.9 amps is 1/0 to 500 kcmil.
   d. Incoming wire size range of non-fused disconnect with MCA from 800 to 1199.9 amps is 250 kcmil to 500 kcmil.
6. Hydronic pump packages are not available as a factory-installed option for units 30RB210-390.
7. Power draw includes both crankcase heaters and cooler heaters (where used). Each compressor has a crankcase heater which draws 56 watts of power. Units ordered with the cooler heater option have 1 (060-150) or 2 (160-300) cooler heaters, 825 watts each.

208/230
460
575 v only

Electrical data (cont)

30RB ELECTRICAL DATA — DUAL POINT UNITS (cont)

30RB UNIT SIZE	UNIT VOLTAGE			7.5 HP PUMP, 1750/3450 RPM				10 HP PUMP, 3450 RPM				15 HP PUMP, 3450 RPM			
	V-Hz (3 Ph)	Supplied		MCA	MOCP	ICF	Rec Fuse Size	MCA	MOCP	ICF	Rec Fuse Size	MCA	MOCP	ICF	Rec Fuse Size
		Min	Max	XL	XL	XL		XL	XL	XL		XL	XL	XL	
060	208/230-60	187	253	194.4/141.5	250/200	585.7/532.8	225/175	202.4/141.5	250/200	593.6/532.8	225/175	—	—	—	—
	380-60	342	418	100.4/ 74.1	125/110	312.4/286.1	125/ 90	104.8/ 74.1	125/110	316.8/286.1	125/ 90	—	—	—	—
	460-60	414	506	85.2/ 62.5	110/ 90	259.3/236.6	100/ 80	88.8/ 62.5	110/ 90	262.9/236.6	100/ 80	—	—	—	—
	575-60	518	633	68.2/ 50.0	90/ 70	210.5/192.3	80/ 60	71.1/ 50.0	90/ 70	213.4/192.3	80/ 60	—	—	—	—
070	208/230-60	187	253	237.6/141.5	300/200	679.9/532.8	300/175	245.6/141.5	300/200	687.8/532.8	300/175	—	—	—	—
	380-60	342	418	125.0/ 74.1	150/110	378.3/286.1	150/ 90	129.3/ 74.1	175/110	382.7/286.1	150/ 90	—	—	—	—
	460-60	414	506	105.2/ 62.5	125/ 90	313.2/236.6	125/ 80	108.8/ 62.5	150/ 90	316.8/236.6	125/ 80	—	—	—	—
	575-60	518	633	85.6/ 50.0	110/ 70	253.2/192.3	100/ 60	88.4/ 50.0	110/ 70	256.1/192.3	100/ 60	—	—	—	—
080	208/230-60	187	253	242.2/168.8	300/225	633.4/560.0	300/200	250.1/168.8	300/225	641.4/560.0	300/200	266.3/168.8	300/225	657.5/560.0	300/200
	380-60	342	418	126.6/ 86.4	150/110	338.6/298.4	150/100	130.9/ 86.4	150/110	342.9/298.4	150/100	139.8/ 86.4	175/110	351.8/298.4	150/100
	460-60	414	506	106.8/ 73.6	125/100	280.9/247.7	125/ 90	110.4/ 73.6	125/100	284.5/247.7	125/ 90	117.7/ 73.6	150/100	291.8/247.7	150/ 90
	575-60	518	633	85.5/ 59.0	110/ 80	227.8/201.2	100/ 70	88.4/ 59.0	110/ 80	230.6/201.2	100/ 70	94.2/ 59.0	110/ 80	236.5/201.2	110/ 70
090	208/230-60	187	253	309.3/168.8	400/225	751.5/560.0	350/200	317.2/168.8	400/225	759.5/560.0	350/200	333.4/168.8	400/225	775.6/560.0	400/200
	380-60	342	418	164.2/ 86.4	200/110	417.6/298.4	200/100	168.5/ 86.4	200/110	421.9/298.4	200/100	177.4/ 86.4	225/110	430.8/298.4	200/100
	460-60	414	506	137.6/ 73.6	175/100	345.6/247.7	150/ 90	141.2/ 73.6	175/100	349.2/247.7	175/ 90	148.5/ 73.6	175/100	356.5/247.7	175/ 90
	575-60	518	633	111.5/ 59.0	125/ 80	279.1/201.2	125/ 70	114.4/ 59.0	125/ 80	282.0/201.2	125/ 70	120.2/ 59.0	150/ 80	287.8/201.2	150/ 70
100	208/230-60	187	253	309.3/212.0	400/300	751.5/654.2	350/250	317.2/212.0	400/300	759.5/654.2	350/250	333.4/212.0	400/300	775.6/654.2	400/250
	380-60	342	418	164.2/110.9	200/150	417.6/364.3	200/125	168.5/110.9	200/150	421.9/364.3	200/125	177.4/110.9	225/150	430.8/364.3	200/125
	460-60	414	506	137.6/ 93.6	175/125	345.6/301.6	150/110	141.2/ 93.6	175/125	349.2/301.6	175/110	148.5/ 93.6	175/125	356.5/301.6	175/110
	575-60	518	633	111.5/ 76.3	125/110	279.1/243.9	125/ 90	114.4/ 76.3	125/110	282.0/243.9	125/ 90	120.2/ 76.3	150/110	287.8/243.9	150/ 90
110	208/230-60	187	253	309.3/243.8	400/300	751.5/635.0	350/300	317.2/243.8	400/300	759.5/635.0	350/300	333.4/243.8	400/300	775.6/635.0	400/300
	380-60	342	418	164.2/124.8	200/150	417.6/336.8	200/150	168.5/124.8	200/150	421.9/336.8	200/150	177.4/124.8	225/150	430.8/336.8	200/150
	460-60	414	506	137.6/106.3	175/125	345.6/280.4	150/125	141.2/106.3	175/125	349.2/280.4	175/125	148.5/106.3	175/125	356.5/280.4	175/125
	575-60	518	633	111.5/ 85.2	125/110	279.1/227.4	125/100	114.4/ 85.2	125/110	282.0/227.4	125/100	120.2/ 85.2	150/110	287.8/227.4	150/100
120	208/230-60	187	253	321.2/306.2	400/400	763.5/748.4	350/350	329.2/306.2	400/400	771.4/748.4	400/350	345.3/306.2	400/400	787.6/748.4	400/350
	380-60	342	418	170.7/160.2	200/200	424.1/413.6	200/175	175.1/160.2	200/200	428.5/413.6	200/175	183.9/160.2	225/200	437.3/413.6	200/175
	460-60	414	506	143.0/135.2	175/175	351.0/343.2	175/150	146.6/135.2	175/175	354.6/343.2	175/150	153.9/135.2	175/175	361.9/343.2	175/150
	575-60	518	633	115.8/110.2	125/125	283.4/277.8	125/125	118.7/110.2	150/125	286.3/277.8	150/125	124.5/110.2	150/125	292.1/277.8	150/125
130	208/230-60	187	253	427.3/243.8	500/300	869.6/635.0	500/300	435.3/243.8	500/300	877.6/635.0	500/300	451.4/243.8	500/300	893.7/635.0	500/300
	380-60	342	418	226.6/124.8	250/150	479.9/336.8	250/150	230.9/124.8	250/150	484.3/336.8	250/150	239.8/124.8	250/150	493.1/336.8	250/150
	460-60	414	506	190.0/106.3	225/125	398.0/280.4	225/125	193.6/106.3	225/125	401.6/280.4	225/125	200.9/106.3	225/125	408.9/280.4	225/125
	575-60	518	633	154.0/ 85.2	175/110	321.6/227.4	175/100	156.9/ 85.2	175/110	324.5/227.4	175/100	162.7/ 85.2	175/110	330.4/227.4	175/100
150	208/230-60	187	253	427.3/306.2	500/400	869.6/748.4	500/350	435.3/306.2	500/400	877.6/748.4	500/350	451.4/306.2	500/400	893.7/748.4	500/350
	380-60	342	418	226.6/160.2	250/200	479.9/413.6	250/175	230.9/160.2	250/200	484.3/413.6	250/175	239.8/160.2	250/200	493.1/413.6	250/175
	460-60	414	506	190.0/135.2	225/175	398.0/343.2	225/150	193.6/135.2	225/175	401.6/343.2	225/150	200.9/135.2	225/175	408.9/343.2	225/150
	575-60	518	633	154.0/110.2	175/125	321.6/277.8	175/125	156.9/110.2	175/125	324.5/277.8	175/125	162.7/110.2	175/125	330.4/277.8	175/125
160	208/230-60	187	253	545.4/243.8	600/300	987.7/635.0	600/300	553.4/243.8	600/300	995.6/635.0	600/300	569.5/243.8	600/300	1011.8/635.0	600/300
	380-60	342	418	288.9/124.8	300/150	542.3/336.8	300/150	293.3/124.8	300/150	546.7/336.8	300/150	302.1/124.8	350/150	555.5/336.8	350/150
	460-60	414	506	242.4/106.3	250/125	450.4/280.4	250/125	246.0/106.3	250/125	454.0/280.4	250/125	253.3/106.3	300/125	461.3/280.4	300/125
	575-60	518	633	196.6/ 85.2	225/110	364.2/227.4	225/100	199.4/ 85.2	225/110	367.1/227.4	225/100	205.3/ 85.2	225/110	372.9/227.4	225/100
170	208/230-60	187	253	545.4/306.2	600/400	987.7/748.4	600/350	553.4/306.2	600/400	995.6/748.4	600/350	569.5/306.2	600/400	1011.8/748.4	600/350
	380-60	342	418	288.9/160.2	300/200	542.3/413.6	300/175	293.3/160.2	300/200	546.7/413.6	300/175	302.1/160.2	350/200	555.5/413.6	350/175
	460-60	414	506	242.4/135.2	250/175	450.4/343.2	250/150	246.0/135.2	250/175	454.0/343.2	250/150	253.3/135.2	300/175	461.3/343.2	300/150
	575-60	518	633	196.6/110.2	225/125	364.2/277.8	225/125	199.4/110.2	225/125	367.1/277.8	225/125	205.3/110.2	225/125	372.9/277.8	225/125
190	208/230-60	187	253	569.3/400.4	600/450	1011.6/842.6	600/450	577.3/400.4	600/450	1019.5/842.6	600/450	593.4/400.4	600/450	1035.7/842.6	600/450
	380-60	342	418	302.0/209.5	350/250	555.4/462.9	350/225	306.4/209.5	350/250	559.7/462.9	350/225	315.2/209.5	350/250	568.6/462.9	350/225
	460-60	414	506	253.2/176.8	300/200	461.2/384.8	300/200	256.8/176.8	300/200	464.8/384.8	300/200	264.1/176.8	300/200	472.1/384.8	300/200
	575-60	518	633	205.2/144.1	225/175	372.8/311.7	225/175	208.1/144.1	225/175	375.7/311.7	225/175	213.9/144.1	225/175	381.5/311.7	225/175

LEGEND

ICF — Instantaneous Current Flow (Ckt1/Ckt2)
MCA — Minimum Circuit Amps (Ckt1/Ckt2)
MOCP — Maximum Overcurrent Protection (Ckt1/Ckt2)
XL — Across-the-Line Start

NOTES:

1. Units are suitable for use on electrical systems where voltage supplied to the unit terminals is not below or above the listed minimum and maximum limits. Maximum allowable phase imbalance is: voltage, 2%; amps 10%.
2. Control power is derived from main power. No separate control power connection is required.
3. Cooler heater is wired into the control circuit so it is always operable as long as the power supply disconnect is on, even if any safety device is open.
4. For MCA that is less than or equal to 380 amps, 3 conductors are required.
   For MCA between 381 and 760 amps, 6 conductors are required.
   For MCA between 761 and 1140 amps, 9 conductors are required.
   For MCA between 1141 and 1520 amps, 12 conductors are required.
   Calculation of conductors required is based on 75 C copper wire.
5. Wiring for main field supply must be rated 75 C minimum. Use copper for all units.
   a. Incoming wire size range for the terminal block is no. 4 AWG (American Wire Gage) to 500 kcmil.
   b. Incoming wire size range of non-fused disconnect with MCA up to 599.9 amps is 3/0 to 500 kcmil.
   c. Incoming wire size range of non-fused disconnect with MCA from 600 to 799.9 amps is 1/0 to 500 kcmil.
   d. Incoming wire size range of non-fused disconnect with MCA from 800 to 1199.9 amps is 250 kcmil to 500 kcmil.
6. Hydronic pump packages are not available as a factory-installed option for units 30RB210-390.
7. Power draw includes both crankcase heaters and cooler heaters (where used). Each compressor has a crankcase heater which draws 56 watts of power. Units ordered with the cooler heater option have 1 (060-150) or 2 (160-300) cooler heaters, 825 watts each.

208/230
460
575 v only

30RB ELECTRICAL DATA — POWER ENTRY

30RB UNIT SIZE	VOLTAGE	ELECTRICAL OPTION	CONNECTIONS	MAIN POWER ENTRANCE	CONTROL BOX
060,070	208/230, 380, 460, 575	Standard (Terminal Block)	Single Point	Circuit 1	Combination
			Dual Point	Circuit 1	Combination
				Circuit 2	Combination
		Non-Fused Disconnect Option*	Single Point	Circuit 1	Combination
080-120	208/230	Standard (Terminal Block)	Single Point	Circuit 1	Power-L
			Dual Point	Circuit 1	Power-L
				Circuit 2	Power-L
		Non-Fused Disconnect Option*	Single Point	Circuit 1	Power-L
	380, 460, 575	Standard (Terminal Block)	Single Point	Circuit 1	Combination
			Dual Point	Circuit 1	Combination
				Circuit 2	Combination
		Non-Fused Disconnect Option*	Single Point	Circuit 1	Combination
130-190, 315A-390A, 315B-390B	208/230	Standard (Terminal Block)	Single Point	Circuit 1	Power-L
			Dual Point	Circuit 1	Power-L
				Circuit 2	PEB1
		Non-Fused Disconnect Option	Single Point	Circuit 1	Power-L
			Dual Point	Circuit 1	Power-L
				Circuit 2	PEB1
	380, 460, 575	Standard (Terminal Block)	Single Point	Circuit 1	PEB1
			Dual Point	Circuit 1	PEB1
				Circuit 2	PEB1
		Non-Fused Disconnect Option	Single Point	Circuit 1	PEB1
			Dual Point	Circuit 1	PEB1
				Circuit 2	Power-L
210, 225	208/230†	Standard (Terminal Block)	Dual Point	Circuit 1	Power-L
				Circuit 2	PEB2
		Non-Fused Disconnect Option	Dual Point	Circuit 1	Power-L
				Circuit 2	PEB2
	380, 460, 575	Standard (Terminal Block)	Single Point	Circuit 1	PEB1
			Dual Point	Circuit 1	PEB1
				Circuit 2	PEB1
		Non-Fused Disconnect Option	Single Point	Circuit 1	PEB1
			Dual Point	Circuit 1	PEB1
				Circuit 2	Power-L
250-300	208/230†	Standard (Terminal Block)	Dual Point	Circuit 1	Power-L
				Circuit 2	PEB2
		Non-Fused Disconnect Option	Dual Point	Circuit 1	Power-L
				Circuit 2	PEB2
	380, 460, 575	Standard (Terminal Block)	Single Point	Circuit 1	PEB1
			Dual Point	Circuit 1	PEB1
				Circuit 2	PEB2
		Non-Fused Disconnect	Single Point	Circuit 1	PEB1
			Dual Point	Circuit 1	PEB1
				Circuit 2	PEB2

LEGEND

PEB — Power Electrical Box

*Dual point connection is not available when non-fused disconnect option is selected.
†Single point connection not available.

Electrical data (cont)

CONDENSER FAN ELECTRICAL DATA

UNIT 30RB	UNIT VOLTAGE V-Hz (3 Ph)	STANDARD CONDENSER FANS					
		Circuit A Quantity	FLA (each)	Circuit B Quantity	FLA (each)	Circuit C Quantity	FLA (each)
060, 070	208/230-60	3	11.9	1	11.9	—	—
	380-60	3	6.5	1	6.5	—	—
	460-60	3	5.4	1	5.4	—	—
	575-60	3	4.3	1	4.3	—	—
080	208/230-60	2	11.9	2	11.9	—	—
	380-60	2	6.5	2	6.5	—	—
	460-60	2	5.4	2	5.4	—	—
	575-60	2	4.3	2	4.3	—	—
090, 100, 110	208/230-60	3	11.9	3	11.9	—	—
	380-60	3	6.5	3	6.5	—	—
	460-60	3	5.4	3	5.4	—	—
	575-60	3	4.3	3	4.3	—	—
120	208/230-60	3	11.9	4	11.9	—	—
	380-60	3	6.5	4	6.5	—	—
	460-60	3	5.4	4	5.4	—	—
	575-60	3	4.3	4	4.3	—	—
130, 150	208/230-60	4	11.9	4	11.9	—	—
	380-60	4	6.5	4	6.5	—	—
	460-60	4	5.4	4	5.4	—	—
	575-60	4	4.3	4	4.3	—	—
160,170, 315A, 315B, 330A, 330B, 345A, 345B, 360B	208/230-60	6	11.9	4	11.9	—	—
	380-60	6	6.5	4	6.5	—	—
	460-60	6	5.4	4	5.4	—	—
	575-60	6	4.3	4	4.3	—	—
190, 360A, 390A, 390B	208/230-60	6	11.9	6	11.9	—	—
	380-60	6	6.5	6	6.5	—	—
	460-60	6	5.4	6	5.4	—	—
	575-60	6	4.3	6	4.3	—	—
210, 225	208/230-60	4	11.9	4	11.9	4	11.9
	380-60	4	6.5	4	6.5	4	6.5
	460-60	4	5.4	4	5.4	4	5.4
	575-60	4	4.3	4	4.3	4	4.3
250	208/230-60	4	11.9	4	11.9	6	11.9
	380-60	4	6.5	4	6.5	6	6.5
	460-60	4	5.4	4	5.4	6	5.4
	575-60	4	4.3	4	4.3	6	4.3
275	208/230-60	6	11.9	6	11.9	4	11.9
	380-60	6	6.5	6	6.5	4	6.5
	460-60	6	5.4	6	5.4	4	5.4
	575-60	6	4.3	6	4.3	4	4.3
300	208/230-60	6	11.9	6	11.9	6	11.9
	380-60	6	6.5	6	6.5	6	6.5
	460-60	6	5.4	6	5.4	6	5.4
	575-60	6	4.3	6	4.3	6	4.3

LEGEND
FLA — Full Load Amps

PUMP ELECTRICAL DATA

PUMP HP	UNIT VOLTAGE V-Hz (3 Ph)	HYDRONIC SYSTEM (SINGLE/DUAL) FLA (each)	USED ON 30RB SIZES*
3	208/230-60	10.8	060, 070
	380-60	5.9	
	460-60	4.9	
	575-60	3.9	
5	208/230-60	17.7	060-190
	380-60	9.7	
	460-60	8.0	
	575-60	6.4	
7.5	208/230-60	25.7	060-190
	380-60	14.0	
	460-60	11.6	
	575-60	9.3	
10	208/230-60	33.6	060-190
	380-60	18.4	
	460-60	15.2	
	575-60	12.2	
15	208/230-60	49.8	080-190
	380-60	27.2	
	460-60	22.5	
	575-60	18.0	

LEGEND
FLA — Full Load Amps
*Hydronic pump packages are not available as a factory-installed option for units 30RB210-390.

COMPRESSOR ELECTRICAL DATA

UNIT 30RB	UNIT VOLTAGE V-Hz (3 Ph)	COMPRESSOR A1		A2		A3		A4		B1		B2		B3		B4		C1		C2		C3		C4	
		RLA	LRA	RLA	LRA	RLA	LRA	RLA	LRA	RLA	LRA	RLA	LRA	RLA	LRA	RLA	LRA	RLA	LRA	RLA	LRA	RLA	LRA	RLA	LRA
060	208/230-60	75.0	485	75.0	485	—	—	—	—	75.0	485	—	—	—	—	—	—	—	—	—	—	—	—	—	—
	380-60	38.4	260	38.4	260	—	—	—	—	38.4	260	—	—	—	—	—	—	—	—	—	—	—	—	—	—
	460-60	32.7	215	32.7	215	—	—	—	—	32.7	215	—	—	—	—	—	—	—	—	—	—	—	—	—	—
	575-60	26.2	175	26.2	175	—	—	—	—	26.2	175	—	—	—	—	—	—	—	—	—	—	—	—	—	—
070	208/230-60	94.2	560	94.2	560	—	—	—	—	75.0	485	—	—	—	—	—	—	—	—	—	—	—	—	—	—
	380-60	49.3	315	49.3	315	—	—	—	—	38.4	260	—	—	—	—	—	—	—	—	—	—	—	—	—	—
	460-60	41.6	260	41.6	260	—	—	—	—	32.7	215	—	—	—	—	—	—	—	—	—	—	—	—	—	—
	575-60	33.9	210	33.9	210	—	—	—	—	26.2	175	—	—	—	—	—	—	—	—	—	—	—	—	—	—
080	208/230-60	75.0	485	75.0	485	—	—	—	—	75.0	485	75.0	485	—	—	—	—	—	—	—	—	—	—	—	—
	380-60	38.4	260	38.4	260	—	—	—	—	38.4	260	38.4	260	—	—	—	—	—	—	—	—	—	—	—	—
	460-60	32.7	215	32.7	215	—	—	—	—	32.7	215	32.7	215	—	—	—	—	—	—	—	—	—	—	—	—
	575-60	26.2	175	26.2	175	—	—	—	—	26.2	175	26.2	175	—	—	—	—	—	—	—	—	—	—	—	—
090	208/230-60	94.2	560	94.2	560	—	—	—	—	75.0	485	75.0	485	—	—	—	—	—	—	—	—	—	—	—	—
	380-60	49.3	315	49.3	315	—	—	—	—	38.4	260	38.4	260	—	—	—	—	—	—	—	—	—	—	—	—
	460-60	41.6	260	41.6	260	—	—	—	—	32.7	215	32.7	215	—	—	—	—	—	—	—	—	—	—	—	—
	575-60	33.9	210	33.9	210	—	—	—	—	26.2	175	26.2	175	—	—	—	—	—	—	—	—	—	—	—	—
100	208/230-60	94.2	560	94.2	560	—	—	—	—	94.2	560	94.2	560	—	—	—	—	—	—	—	—	—	—	—	—
	380-60	49.3	315	49.3	315	—	—	—	—	49.3	315	49.3	315	—	—	—	—	—	—	—	—	—	—	—	—
	460-60	41.6	260	41.6	260	—	—	—	—	41.6	260	41.6	260	—	—	—	—	—	—	—	—	—	—	—	—
	575-60	33.9	210	33.9	210	—	—	—	—	33.9	210	33.9	210	—	—	—	—	—	—	—	—	—	—	—	—
110	208/230-60	94.2	560	94.2	560	—	—	—	—	75.0	485	75.0	485	75.0	485	—	—	—	—	—	—	—	—	—	—
	380-60	49.3	315	49.3	315	—	—	—	—	38.4	260	38.4	260	38.4	260	—	—	—	—	—	—	—	—	—	—
	460-60	41.6	260	41.6	260	—	—	—	—	32.7	215	32.7	215	32.7	215	—	—	—	—	—	—	—	—	—	—
	575-60	33.9	210	33.9	210	—	—	—	—	26.2	175	26.2	175	26.2	175	—	—	—	—	—	—	—	—	—	—
120	208/230-60	94.2	560	94.2	560	—	—	—	—	94.2	560	94.2	560	94.2	560	—	—	—	—	—	—	—	—	—	—
	380-60	49.3	315	49.3	315	—	—	—	—	49.3	315	49.3	315	49.3	315	—	—	—	—	—	—	—	—	—	—
	460-60	41.6	260	41.6	260	—	—	—	—	41.6	260	41.6	260	41.6	260	—	—	—	—	—	—	—	—	—	—
	575-60	33.9	210	33.9	210	—	—	—	—	33.9	210	33.9	210	33.9	210	—	—	—	—	—	—	—	—	—	—
130	208/230-60	94.2	560	94.2	560	94.2	560	—	—	75.0	485	75.0	485	75.0	485	—	—	—	—	—	—	—	—	—	—
	380-60	49.3	315	49.3	315	49.3	315	—	—	38.4	260	38.4	260	38.4	260	—	—	—	—	—	—	—	—	—	—
	460-60	41.6	260	41.6	260	41.6	260	—	—	32.7	215	32.7	215	32.7	215	—	—	—	—	—	—	—	—	—	—
	575-60	33.9	210	33.9	210	33.9	210	—	—	26.2	175	26.2	175	26.2	175	—	—	—	—	—	—	—	—	—	—
150	208/230-60	94.2	560	94.2	560	94.2	560	—	—	94.2	560	94.2	560	94.2	560	—	—	—	—	—	—	—	—	—	—
	380-60	49.3	315	49.3	315	49.3	315	—	—	49.3	315	49.3	315	49.3	315	—	—	—	—	—	—	—	—	—	—
	460-60	41.6	260	41.6	260	41.6	260	—	—	41.6	260	41.6	260	41.6	260	—	—	—	—	—	—	—	—	—	—
	575-60	33.9	210	33.9	210	33.9	210	—	—	33.9	210	33.9	210	33.9	210	—	—	—	—	—	—	—	—	—	—
160, 315A, 315B, 330B	208/230-60	94.2	560	94.2	560	94.2	560	94.2	560	75.0	485	75.0	485	75.0	485	—	—	—	—	—	—	—	—	—	—
	380-60	49.3	315	49.3	315	49.3	315	49.3	315	38.4	260	38.4	260	38.4	260	—	—	—	—	—	—	—	—	—	—
	460-60	41.6	260	41.6	260	41.6	260	41.6	260	32.7	215	32.7	215	32.7	215	—	—	—	—	—	—	—	—	—	—
	575-60	33.9	210	33.9	210	33.9	210	33.9	210	26.2	175	26.2	175	26.2	175	—	—	—	—	—	—	—	—	—	—
170, 330A, 345A, 345B, 360B	208/230-60	94.2	560	94.2	560	94.2	560	94.2	560	94.2	560	94.2	560	94.2	560	—	—	—	—	—	—	—	—	—	—
	380-60	49.3	315	49.3	315	49.3	315	49.3	315	49.3	315	49.3	315	49.3	315	—	—	—	—	—	—	—	—	—	—
	460-60	41.6	260	41.6	260	41.6	260	41.6	260	41.6	260	41.6	260	41.6	260	—	—	—	—	—	—	—	—	—	—
	575-60	33.9	210	33.9	210	33.9	210	33.9	210	33.9	210	33.9	210	33.9	210	—	—	—	—	—	—	—	—	—	—
190, 360A, 390A, 390B	208/230-60	94.2	560	94.2	560	94.2	560	94.2	560	94.2	560	94.2	560	94.2	560	94.2	560	—	—	—	—	—	—	—	—
	380-60	49.3	315	49.3	315	49.3	315	49.3	315	49.3	315	49.3	315	49.3	315	49.3	315	—	—	—	—	—	—	—	—
	460-60	41.6	260	41.6	260	41.6	260	41.6	260	41.6	260	41.6	260	41.6	260	41.6	260	—	—	—	—	—	—	—	—
	575-60	33.9	210	33.9	210	33.9	210	33.9	210	33.9	210	33.9	210	33.9	210	33.9	210	—	—	—	—	—	—	—	—
210	208/230-60	94.2	560	94.2	560	94.2	560	—	—	75.0	485	75.0	485	75.0	485	—	—	94.2	560	94.2	560	94.2	560	—	—
	380-60	49.3	315	49.3	315	49.3	315	—	—	38.4	260	38.4	260	38.4	260	—	—	49.3	315	49.3	315	49.3	315	—	—
	460-60	41.6	260	41.6	260	41.6	260	—	—	32.7	215	32.7	215	32.7	215	—	—	41.6	260	41.6	260	41.6	260	—	—
	575-60	33.9	210	33.9	210	33.9	210	—	—	26.2	175	26.2	175	26.2	175	—	—	33.9	210	33.9	210	33.9	210	—	—
225	208/230-60	94.2	560	94.2	560	94.2	560	—	—	94.2	560	94.2	560	94.2	560	—	—	94.2	560	94.2	560	94.2	560	—	—
	380-60	49.3	315	49.3	315	49.3	315	—	—	49.3	315	49.3	315	49.3	315	—	—	49.3	315	49.3	315	49.3	315	—	—
	460-60	41.6	260	41.6	260	41.6	260	—	—	41.6	260	41.6	260	41.6	260	—	—	41.6	260	41.6	260	41.6	260	—	—
	575-60	33.9	210	33.9	210	33.9	210	—	—	33.9	210	33.9	210	33.9	210	—	—	33.9	210	33.9	210	33.9	210	—	—
250	208/230-60	94.2	560	94.2	560	94.2	560	—	—	94.2	560	94.2	560	94.2	560	—	—	94.2	560	94.2	560	94.2	560	94.2	560
	380-60	49.3	315	49.3	315	49.3	315	—	—	49.3	315	49.3	315	49.3	315	—	—	49.3	315	49.3	315	49.3	315	49.3	315
	460-60	41.6	260	41.6	260	41.6	260	—	—	41.6	260	41.6	260	41.6	260	—	—	41.6	260	41.6	260	41.6	260	41.6	260
	575-60	33.9	210	33.9	210	33.9	210	—	—	33.9	210	33.9	210	33.9	210	—	—	33.9	210	33.9	210	33.9	210	33.9	210
275	208/230-60	94.2	560	94.2	560	94.2	560	94.2	560	94.2	560	94.2	560	94.2	560	94.2	560	94.2	560	94.2	560	94.2	560	—	—
	380-60	49.3	315	49.3	315	49.3	315	49.3	315	49.3	315	49.3	315	49.3	315	49.3	315	49.3	315	49.3	315	49.3	315	—	—
	460-60	41.6	260	41.6	260	41.6	260	41.6	260	41.6	260	41.6	260	41.6	260	41.6	260	41.6	260	41.6	260	41.6	260	—	—
	575-60	33.9	210	33.9	210	33.9	210	33.9	210	33.9	210	33.9	210	33.9	210	33.9	210	33.9	210	33.9	210	33.9	210	—	—
300	208/230-60	94.2	560	94.2	560	94.2	560	94.2	560	94.2	560	94.2	560	94.2	560	94.2	560	94.2	560	94.2	560	94.2	560	94.2	560
	380-60	49.3	315	49.3	315	49.3	315	49.3	315	49.3	315	49.3	315	49.3	315	49.3	315	49.3	315	49.3	315	49.3	315	49.3	315
	460-60	41.6	260	41.6	260	41.6	260	41.6	260	41.6	260	41.6	260	41.6	260	41.6	260	41.6	260	41.6	260	41.6	260	41.6	260
	575-60	33.9	210	33.9	210	33.9	210	33.9	210	33.9	210	33.9	210	33.9	210	33.9	210	33.9	210	33.9	210	33.9	210	33.9	210

LEGEND

LRA — Locked Rotor Amps
RLA — Rated Load Amps

Controls

Microprocessor

The *Comfort*Link™ microprocessor controls overall unit operation. Its central executive routine controls a number of processes simultaneously. These include internal timers, reading inputs, analog to digital conversions, fan control, display control, diagnostic control, output relay control, demand limit, capacity control, head pressure control, and temperature reset. Some processes are updated almost continuously, others every 2 to 3 seconds, and some every 30 seconds. The microprocessor routine is started by switching the Emergency ON-OFF switch to ON position. Pump control of external pumps (where so configured) or optional internal pump, will energize the cooler pump to the internal (or CCN) time schedule (or input occupied signal from external system).

Where dual pumps are utilized only one pump will be operated at a time. The control will start the pump with the least hours. When the unit receives a call for cooling (based on a deviation from chilled water set point), the unit stages up in capacity to maintain the cooler fluid set point. The first compressor starts 1 to 3 minutes after the call for cooling. The *Comfort*Link microprocessor controls the capacity of the chiller by cycling compressors at a rate to satisfy actual dynamic load conditions. The control maintains leaving-fluid temperature set point shown on the scrolling marquee display board through intelligent cycling. Accuracy depends on loop volume, loop flow rate, load, outdoor-air temperature, number of stages, and particular stage being cycled off. No adjustment for cooling range or cooler flow rate is required, because the control automatically compensates for cooling range by measuring both return-fluid temperature and leaving-fluid temperature. This is referred to as leaving-fluid temperature control with return-fluid temperature compensation.

The basic logic for determining when to add or remove a stage is a time band integration of deviation from set point plus rate of change of leaving-fluid temperature. When leaving-fluid temperature is close to set point and slowly moving closer, logic prevents addition of another stage.

If 1° F per minute (0.6° C per minute) pulldown control has been selected (adjustable setting), no additional steps of capacity are added as long as the difference between leaving-fluid temperature and set point is greater than 4° F (2.2° C) and rate of change in leaving-fluid temperature is greater than the selected pulldown control rate. If it has been less than 90 seconds since the last capacity change, compressors will continue to run unless a safety device trips. This prevents rapid cycling and also helps return oil during short on periods.

Sensors

Thermistors are used to control temperature-sensing inputs to microprocessor. Additional thermistor sensors may be used as remote temperature sensors for optional LCWT (leaving chilled fluid temperature) reset.

- Cooler leaving chilled fluid temperature (T1)
- Cooler entering fluid (return) temperature (T2)
- Outside-air temperature (T9)

Two refrigerant pressure transducers are used in each circuit for sensing suction and discharge pressure. The microprocessor uses these inputs to control capacity and fan cycling.

- Saturated condensing temperature
- Cooler saturation temperature

Control sequence

Off cycle — If ambient temperature is below 36 F (2 C), cooler heaters (if equipped) are also energized.

Start-up — After the control circuit switches on, the prestart process takes place, then microprocessor checks itself, starts pump (if configured) and waits for temperature to stabilize. The controlled pulldown feature limits compressor loading on start-up to reduce demand on start-up and unnecessary compressor usage. The microprocessor limits supply-fluid temperature decrease (start-up only) to 1° F (0.6° C) per minute.

Capacity control — On first call for cooling, microprocessor starts initial compressor and fan stage on lead circuit.

As additional cooling is required, additional compressors are energized.

Speed at which capacity is added or reduced is controlled by temperature deviation from set point and rate of temperature change of chilled fluid.

The Main Base Board (MBB) responds to the supply chilled water temperature to cycle the compressors to match cooling load requirements.

Minimum load control valve is energized by the MBB. Valve allows hot gas to pass directly into the cooler circuit on the final step of unloading, permitting the unit to operate at lower loads with less compressor cycling.

Additional information

Detailed information on controls and operation is available in the Controls, Start-Up, Operation and Troubleshooting guide included with each unit. Packaged Service Training programs are also available. Contact your Carrier representative for more information.

Dual chiller control — The *Comfort*Link™ controller allows 2 chillers (piped in parallel) to operate as a single chilled water plant with standard control functions coordinated through the master chiller controller. This standard *Comfort*Link feature requires a communication link between the 2 chillers and, in the case of parallel chillers, requires an additional thermistor and well for each chiller.

Dynamic *Comfort*Link controls — Dynamic *Comfort*Link controls keep the chiller on line during periods of extreme operating conditions. If the entering fluid temperature is 85 F (29 C) or higher and the saturated suction temperature is 50 F (10 C) or higher the maximum operating pressure (MOP) feature limits the suction to keep the chiller online. The control automatically starts the chiller in the unloaded state to eliminate the potential of compressor overload due to high head pressure or low suction pressure. The controller will equalize run time on each circuit through the lead/lag feature. If a circuit becomes disabled, the control will automatically set the active circuit to lead, keeping the chiller online at a reduced capacity.

CAPACITY CONTROL STEPS*

UNIT 30RB	STANDARD CAPACITY STEPS (%)
060	0, 33, 67, 100
070	0, 29, 64, 100
080	0, 25, 50, 75, 100
090	0, 22, 50, 72,100
100	0, 25, 50, 75, 100
110	0, 18, 41, 59, 82, 100
120	0, 20, 40, 60, 80, 100
130	0, 15, 33, 48, 67, 81, 100
150	0, 17, 33, 50, 67, 83, 100
160	0, 13, 28, 41, 56, 69, 84, 100
170	0, 14, 29, 43, 57, 71, 86, 100
190	0, 13, 25, 38, 50, 63, 75, 88, 100
210	0, 10, 21, 33, 43, 55, 67, 76, 88, 100
225	0, 11, 22, 33, 44, 56, 67, 78, 89, 100
250	0, 10, 20, 30, 40, 50, 60, 70, 80, 90, 100
275	0, 9, 18, 27, 36, 45, 55, 64, 73, 82, 91, 100
300	0, 8, 17, 25, 33, 42, 50, 58, 67, 75, 83, 92, 100
315	0, 6, 14, 20, 28, 34, 42, 50, 56, 64, 70, 78, 84, 92, 100
330	0, 6, 13, 19, 27, 33, 40, 48, 55, 63, 70, 78, 85, 93, 100
345	0, 7, 14, 21, 29, 36, 43, 50, 57, 64, 71, 79, 86, 93, 100
360	0, 7, 13, 20, 27, 33, 40, 47, 53, 60, 67, 73, 80, 87, 93, 100
390	0, 6, 13, 19, 25, 31, 38, 44, 50, 56, 63, 69, 75, 81, 88, 94, 100

*Capacity control steps may vary due to compressor sequencing.

Standard *Comfort*Link™ controls with scrolling marquee display — A four-digit alphanumeric display shows all of the *Comfort*Link control codes (with 60-character expandable clear language), plus set points, time of day, temperatures, pressures, and superheat. Additional information can be displayed all at once with the accessory Navigator™ display.

Navigator display — An optional 4-line, 20-character per line display an also available as a field-installed accessory.

Low-temperature override — This feature prevents LCWT from overshooting the set point and possibly causing a nuisance trip-out by the freeze protection.

High-temperature override — This feature allows chiller to add capacity quickly during rapid load variations.

Abnormal conditions — All control safeties in chiller operate through compressor protection board or control relay and microprocessor.

Loss of feedback signal to the MBB will cause the compressor(s) to shut down. For other safeties, microprocessor makes appropriate decision to shut down a compressor due to a safety trip or bad sensor reading and displays appropriate failure code on the display. Chiller remains in safety mode until reset. It then reverts to normal control when unit is reset.

Low-pressure safety — Safety cuts out if system pressure drops below minimum.

High-pressure cutout — Switch shuts down compressors if compressor discharge pressure increases to 641 psig (4420 kPa).

Compressor anti-cycling — This feature limits compressor cycling.

Loss of flow protection — Proof of flow switches are standard and installed on all 30RB chillers.

Sensor failures — Failures are detected by the microprocessor.

Temperature reset

The energy management module (EMM) is required for 4 to 20 mA reset of LCWT in constant fluid systems. Reset by return fluid, outdoor-air temperature, or space temperature does not require this option. Reset reduces compressor power usage at part load when design LCWT is not necessary. Humidity control should be considered since higher coil temperatures resulting from reset will reduce latent heat capacity. Three reset options are offered, based on the following:

Return-fluid temperature — Increases LCWT set point as return (or entering) fluid temperature decreases (indicating load decrease). Option may be used in any application where return fluid provides accurate load indication. Limitation of return fluid reset is that LCWT may only be reset to value of design return fluid temperature.

Outdoor-air temperature — Increases LCWT as outdoor ambient temperature decreases (indicating load decrease). This reset should be applied only where outdoor ambient temperature is an accurate indication of load. An accessory thermistor is required.

Space temperature — Increases LCWT as space temperature decreases (indicating load decrease). This reset should be applied only where space temperature is an accurate indication of load. An accessory thermistor and the energy management module accessory is required.

For details on applying a reset option, refer to unit Controls and Troubleshooting literature. Obtain ordering part numbers for reset option from the Packaged Chiller Builder program or contact your local Carrier representative.

Accessory controls

Demand can be limited by controlling the chiller capacity through the demand limit control (the energy management module is required for this function). This factory-installed option or accessory interfaces with microprocessor to control unit so that chiller's kW demand does not exceed its setting. It is activated from an external switch or a 4 to 20 mA signal.

The standard *Comfort*Link controller is programmed to accept various accessory temperature reset options (based on outdoor-air temperature [std], return-fluid temperature, or space temperature), that reset the LCWT. An accessory thermistor (T10) is required if outdoor-air temperature or space temperature reset is selected. The energy management module (EMM) is only required for temperature reset that is initiated by a 4 to 20 mA signal.

Demand limit

If applied, limits the total power draw of unit to selected point by controlling number of operational compressors during periods of peak electrical demand.

The energy management module is required for either 2-step or 4 to 20 mA demand limit.

Electronic expansion valve (EXV)

The EXV controls refrigerant flow to the cooler for different operating conditions by moving an orifice to increase or decrease the flow area through the valve based on

microprocessor input. The orifice is positioned by a stepper motor through approximately 3,600 discrete steps and is monitored every three seconds. The EXV maintains an approximate 8° F (5° C) refrigerant superheat entering the compressor.

Diagnostics

The microprocessor may be put through a service test (see Controls, Start-Up, Operation, Service, and Troubleshooting literature). Service test confirms microprocessor is functional, informs observer through display the condition of each sensor and switch in chiller, and allows observer to check for proper operation of fans and compressors.

Default settings

To facilitate quick start-ups, 30RB chillers with *Comfort*Link™ controls are pre-configured with a default setting that assumes stand-alone operation supplying 44 F (6.7 C) chilled water.

Configuration settings will be based on any options or accessories included with the unit at the time of manufacturing.

Date and time are set to U.S.A. Eastern Time zone and will need reconfiguring based on location and local time zone. If operation based on occupancy scheduling is desired, this will also need to be set during installation.

Ice duty

*Comfort*Link controls have the capability of reduced leaving fluid temperature operation for thermal storage, or ice duty. The optional Energy Management display includes input contacts for the "ice done" signal generated by the thermal storage control system. The ice duty feature may be configured to start on an external input command or by the *Comfort*Link standard internal scheduling function. The ice duty function requires brine modification for leaving fluid temperatures below 30 F (–1.1 C) for chiller sizes 30RB110-390. No modification is required for the ice duty function with chiller sizes 30RB060-100. Ice duty may be used in combination with any other standard features offered by the energy management module and *Comfort*Link controls.

The production of ice, which is stored for peak cooling demands, can significantly decrease energy costs. The unit produces ice (normally at night) by supplying ice storage tanks with low temperature cooling fluid. The chiller takes advantage of reduced ambient conditions at night for ice-making mode, so the capacity suffers a lower penalty for the low leaving fluid temperatures.

At peak cooling demands the chiller and the stored ice may share the cooling load to reduce operating costs. The thermal storage system may potentially reduce the size of the chiller plant required to meet demand loads.

Heat reclaim option

The heat reclaim option is available for 30RB060-190 chiller applications in which the customer has a simultaneous need for chilled water and tempered hot water. Whether or not the heat reclaim mode is in operation, the chiller always controls the leaving chilled water temperature set point. When in the heat reclaim mode, the two refrigerant circuits are independently controlled, which means that one circuit can be in the standard cooling mode while the other circuit is in the heat reclaim mode. This permits two heat reclaim control stages (100% heat reclaim if both circuits are in heat reclaim mode and approximately 50% heat reclaim based upon the size of the operating circuit). The intermediate stages are obtained by cycling between the cooling-only mode and the heat reclaim mode.

When the heat reclaim mode is enabled (local mode, customer remote contact or CCN control), and the return (entering) hot-water temperature is below the customer-adjustable set point, one circuit is switched to the heat reclaim mode. In this mode, the chiller is operating with a water-cooled condenser on one circuit and an air-cooled condenser on the other circuit. Depending upon hot-water temperature requirements, the second circuit may also be switched to the heat reclaim mode (providing full heat recovery in this mode of operation). The hot water temperature is controlled by the cycling of each refrigerant circuit between the air-cooled and heat reclaim modes. When the hot water set point is satisfied, the chiller will transition back to the cooling-only mode and operate as a conventional air-cooled chiller.

The heat reclaim option is provided with an additional factory-installed board. The functions controlled by this board include control of:

- a customer-supplied heat reclaim condenser pump
- a customer-supplied 3-way valve
- a factory-supplied heat reclaim condenser heater
- a series of solenoid valves.

Changeover from the cooling-only mode to the heat reclaim mode involves the generation of a signal to start the heat reclaim condenser pump and pump flow verification via the condenser water flow switch. If the condenser water flow switch contacts remain open for more than a minute after the signal has been sent to the pumps, the circuit remains in the cooling mode and an alarm is generated.

When operating in the heat reclaim mode, proper head pressure must be maintained. In order to accomplish this, a 3-way water valve must be field-installed and located within 40 ft (12.2 m) of the heat reclaim condenser. This valve will facilitate cold water start-up (water temperatures below 59 F [15 C]), and it also will be able to maintain proper head pressure during heat reclaim operation. The minimum position of this water valve must be set at 20%, and the maximum position of the valve must be set at 100%. A 0 to 10 vdc control signal from the heat reclaim board will be used to control the position of the valve.

Typical control wiring schematic

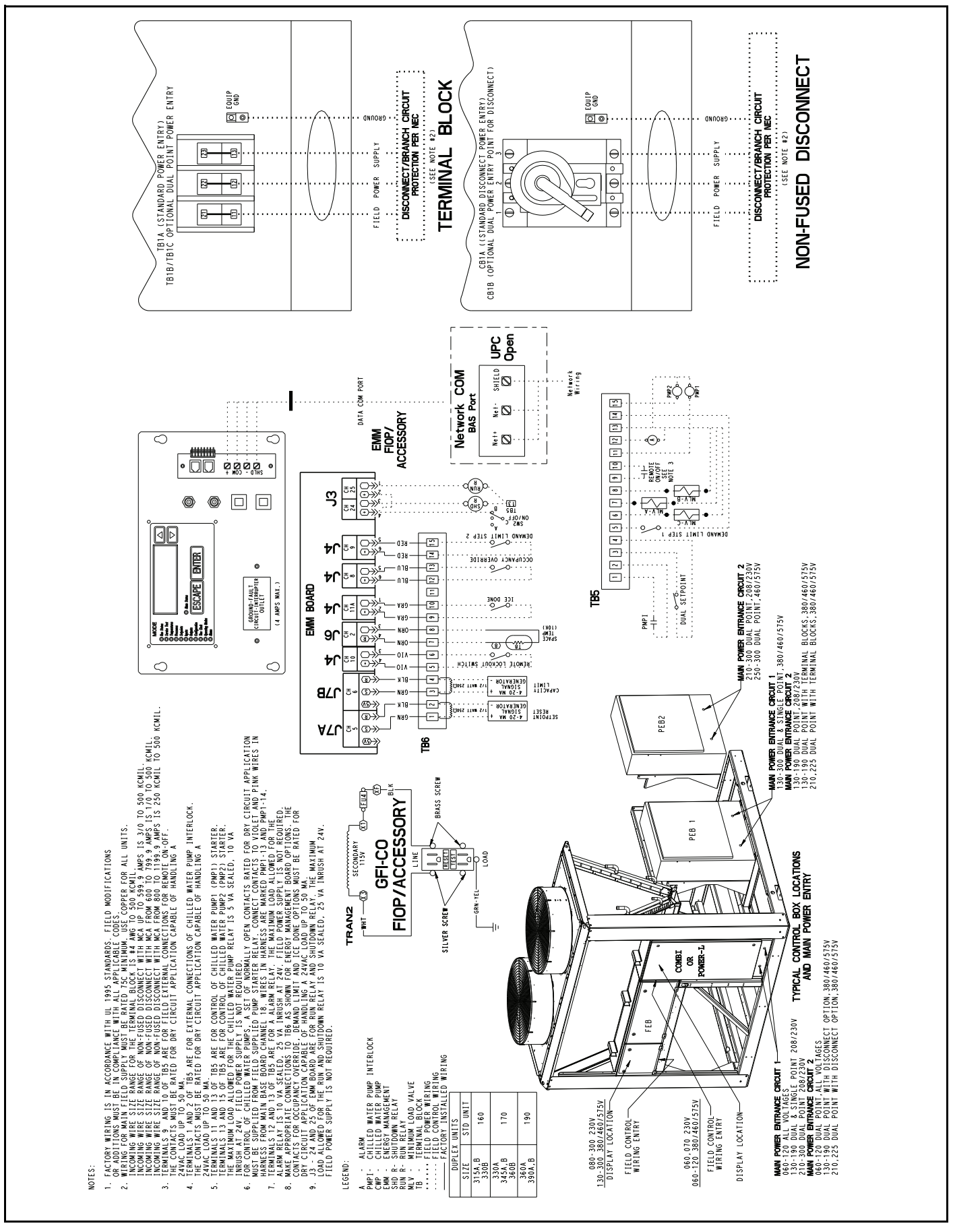

Typical control wiring schematic (cont)

OPTIONAL HEAT RECLAIM CONTROL TYPICAL FIELD WIRING

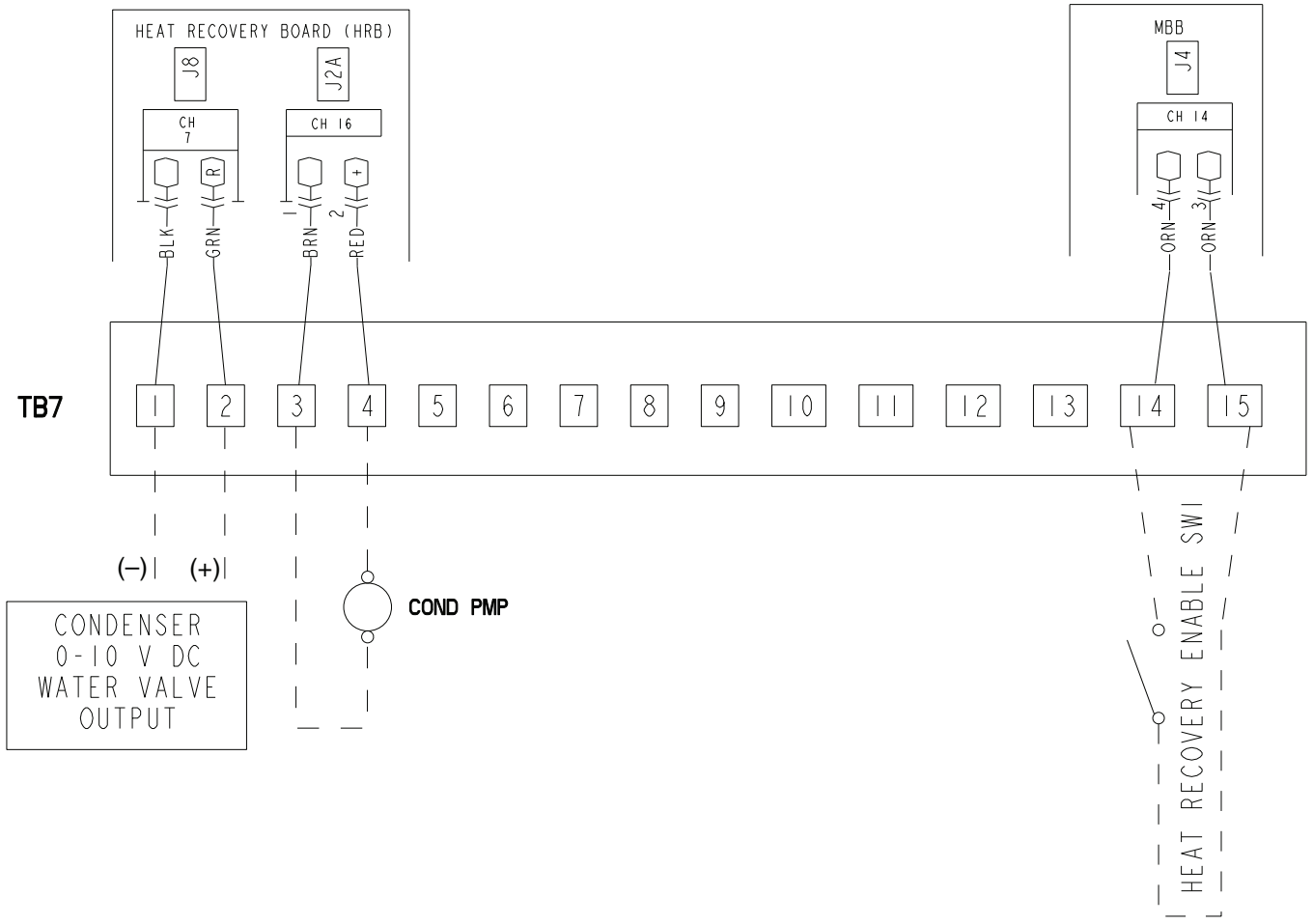

LEGEND

- – – – Field Control Wiring
- ——— Factory Installed Wiring

NOTES:

1. Terminals 1 and 2 of TB7 are for external connection of heat reclaim condenser water valve.
2. Terminals 3 and 4 of TB7 are for external connection of field-supplied heat reclaim water pump control relay.
3. The maximum load allowed for the condenser pump relay is 5 va sealed, 10 va inrush at 24 v.
4. Terminals 14 and 15 of TB7 are for external connection of heat reclaim remote enable switch.
5. Terminals 5 through 13 of TB7 are for the connection of factory-installed solenoid valve control wiring.

Application data

Chiller location and clearances

Do not locate near sound sensitive areas without proper acoustic consideration. For applications requiring mounting a chiller on a building rooftop, consideration should be given to using rubber-in-shear or spring isolators to minimize structure-borne transmission. Unit must be level when installed to ensure proper oil return to the compressors. Clearances must be provided around chillers for airflow, service and local code requirements. See dimensional drawings for specific unit clearance requirements. Ensure adequate clearance between adjacent chillers is maintained. A minimum of 10 ft (3048 mm) is recommended. Chiller fan discharge must be at least as high as adjacent solid walls. Installation in pits is not recommended.

Minimum clearances

The recommended minimum clearance to ensure proper airflow through the condenser coils and to allow fan maintenance is as shown below.

Acceptable clearance on the cooler connection side or end opposite the control box of the unit can be reduced to 3 ft (1 m) without sacrificing performance as long as the remaining three sides are unrestricted. Acceptable clearance on the side with a control box can be reduced to 4 ft (1.3 m) due to NEC (National Electric Code) regulations, without sacrificing performance as long as the remaining three sides are unrestricted. Clearances between chillers in dual chiller applications may be reduced to 6 ft (1.8m) without sacrificing performance provided the remaining sides are unrestricted. For acceptable clearance with layout involving more than 2 chillers, please contact application engineering.

MULTIPLE UNIT SEPARATION

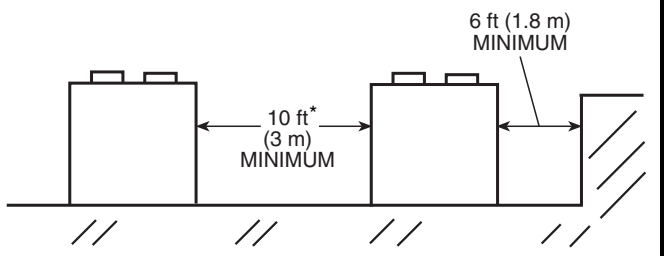

* 12 ft (3.7m) required for unit sizes 275 and 300. For applications with higher than 115 F ambient, contact application engineering.

Oversizing chillers

Oversizing chillers by more than 15% at design conditions must be avoided as the system operating efficiency is adversely affected (resulting in greater or excessive electrical demand). When future expansion of equipment is anticipated, install a single chiller to meet present load requirements and add a second chiller to meet the additional load demand. It is also recommended that 2 smaller chillers be installed where operation at minimum load is critical. The operation of a smaller chiller loaded to a greater percentage over minimum is preferred to operating a single chiller at or near its minimum recommended value. Minimum load control should not be used as a means to allow oversizing chillers. Minimum load control should be given consideration where substantial operating time is anticipated below the minimum unloading step.

Piping duplex units — The 30RB duplex chillers (sizes 315 - 390) are shipped and rigged as 2 separate units. The units must be piped in parallel. If units are to be aligned end-to-end, minimum spacing of 42 to 48-in. (depending on local codes) between chillers is recommended to provide adequate service access and piping clearance.

Multiple chillers

Where chiller capacities greater than can be supplied by a single 30RB chiller are required, or where stand-by capability is desired, chillers may be installed in parallel. Units may be of the same or different sizes with this piping arrangement. However, cooler flow rates must be balanced to ensure proper flow to each chiller.

Unit software is capable of controlling two parallel units as a single plant by making use of the dual chiller control feature. Refer to the Controls, Start-up, Operation, Service and Troubleshooting guide for further details. The accessory Chillervisor System Manager can be used to ensure proper staging sequence of up to 8 chillers. Refer to the accessory Chillervisor System Manager installation instructions for further details.

If the dual chiller algorithm is used, and the machines are installed in parallel, an additional chilled water sensor must be installed for each module. For 30RB315-390, where it is understood that these are duplex chillers comprised of 2 chillers to be installed in parallel, two factory-supplied thermistors and wells are shipped in the control box of one of the modules (for other 30RB chiller sizes which will be installed in a parallel piping configuration, a dual chiller accessory kit is available). Install one thermistor and well per chiller in the common leaving water header.

Parallel chiller control with dedicated pumps is recommended. The chiller must start and stop its own water pump located in its own piping. Check valves are required at the discharge of each pump (*when the factory hydronic package option is chosen, and* ***dual pumps*** *are selected, the check valves are automatically supplied*). If pumps are not dedicated for each chiller, then isolation valves are required. Each chiller must open and close its own isolation valve through the unit control (the valve must be connected to the pump outputs). Refer to the chiller piping configuration shown on the next page.

If a series application is required, the master/slave control feature cannot be used. Hydronic pump packages may not be applied in series applications.

Series chillers

Where a large temperature drop (greater than 20 F [11.1 C]) is desired or where chiller capacities greater than can be supplied by a single 30RB chiller are required or where standby capability is required, chillers may be installed in series. The leaving fluid temperature sensors need not be relocated. However, the cooler minimum entering fluid temperature limitations should be considered for the chillers located downstream of other chillers. Use of reduced pass heads may be required to keep waterside pressure drop at an acceptable level. When chillers are operated in a series arrangement, the use of a Chillervisor System Manager is recommended.

PARALLEL DUAL CHILLER OPERATION

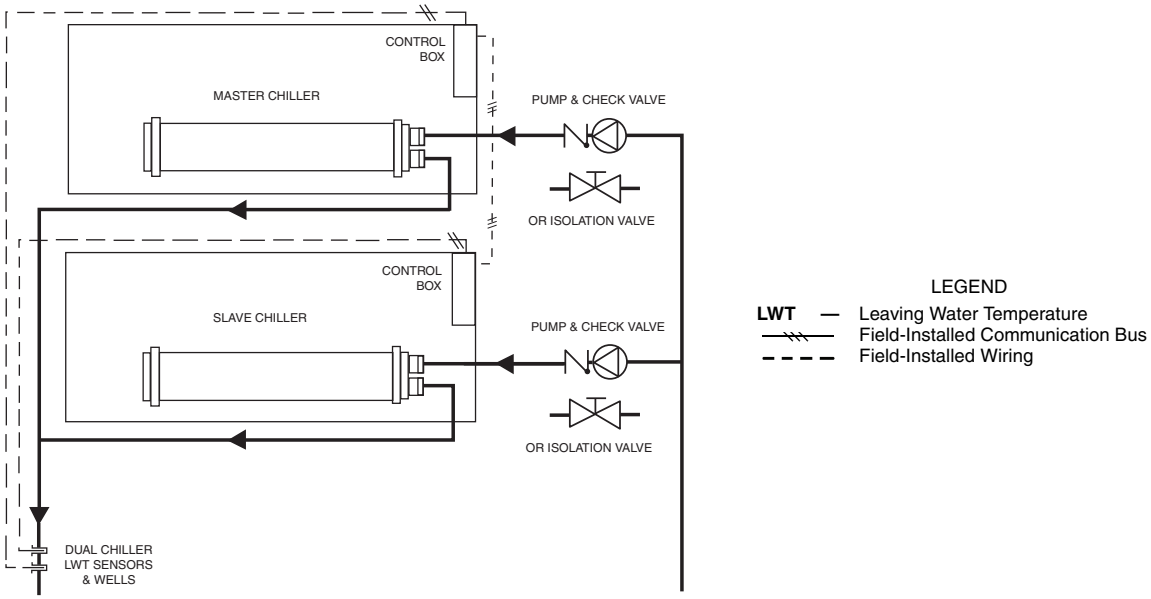

Cooler water temperature

1. Maximum leaving chilled water temperature (LCWT) for the unit is 60 F (15.6 C). Unit can start and pull down with up to 95 F (35 C) entering-water temperature. It is recommended that entering-water temperature not exceed 70 F (21.1 C).
2. Minimum LCWT for standard unit is 30 F (–1.1 C). For leaving-fluid temperatures between 15 and 39.9 F (–9.4 C and 3.3 C) an inhibited antifreeze solution is required. Application of chiller to 15 F (–9.4 C) is standard on unit sizes 30RB060-110 and is possible for unit sizes 30RB120-390 by ordering the factory-installed medium temperature brine option.

NOTE: Water flowing through cooler should not exceed 100 F (38 C).

Strainers

It is recommended that a strainer with a minimum of 20 mesh be installed in the cooler fluid inlet line, just ahead of (and as close as possible) to the cooler.

Cooler flow/range

Ratings and performance data in this publication are for a cooling temperature rise of 10° F (6° C). The 30RB chillers may be operated at a different temperature rise, providing flow limits are not exceeded and corrections to system guidelines are made. For minimum and maximum cooler flow rates, see the Minimum and Maximum Cooler Flow Rates table. A high flow rate is generally limited by the maximum pressure drop that can be tolerated by the unit. The 30RB chillers are designed for a full load temperature rise of 5° to 20° F (2.8° to 11. 1° C). Use the Packaged Chiller Builder Program to obtain the rating if a temperature rise other than 10° F (6° C) is used.

Minimum cooler flow (maximum cooler temperature rise) — The minimum cooler flow for standard units is shown in Minimum and Maximum Cooler Fluid Flow Rates table. When system design conditions require a lower flow (or higher rise) than the minimum allowable cooler flow, follow the recommendations below.

a. Multiple smaller chillers may be applied in series, each providing a portion of the design temperature rise.

b. Cooler fluid may be recirculated to raise the flow rate to the chiller. The mixed temperature entering the cooler must be maintained to a minimum of at least 5° F (2.8° C) above the LCWT and to a maximum of no more than 20° F (11.1° C) above the LCWT.

NOTE: Recirculation flow is shown below.

RECIRCULATION FLOW

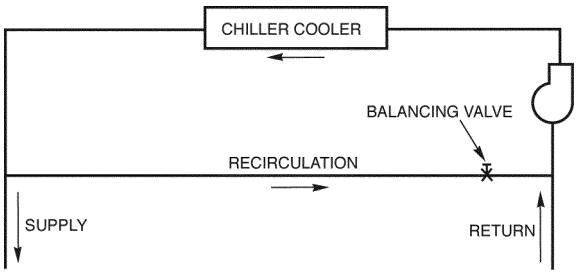

Maximum cooler flow — The maximum cooler flow (approximately 5° F [2.8° C] rise) results in a practical maximum pressure drop through cooler.

Return fluid may bypass the cooler to keep the pressure drop through the cooler within acceptable limits. This permits a higher delta T with lower fluid flow through cooler and mixing after the cooler. The mixed temperature entering the cooler must be maintained to a minimum of at least

5° F (2.8° C) above the LCWT and to a maximum of no more than 20° F (11.1° C) above the LCWT.

NOTE: Bypass flow is shown below.

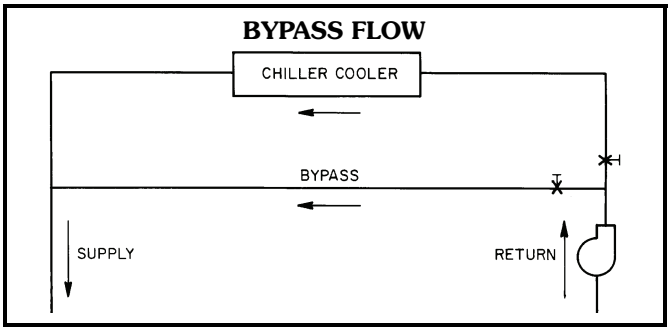

Variable cooler flow rates

Variable flow rates may be applied to a standard chiller. The unit will, however, attempt to maintain a constant leaving chilled water temperature. In such cases, the minimum flow must be in excess of the minimum flow given in the Minimum and Maximum Cooler Fluid Flow Rates table, adjusted for glycol in the system, and the minimum fluid volume must be in excess of 3 gallons per ton (3.2 L per kW). The flow rate must change at a rate less than 10% per minute. Apply a minimum of 6 gallons per ton (6.5 L per kW) water loop volume if the flow rate changes more rapidly.

The 30RB is available without a hydronic pumping package or with either of 2 variations of a hydronic pumping package. One of these hydronic options offers a constant-speed pumping package, and the other offers a variable-speed drive. Traditional pumping systems incorporate constant speed drives and waste energy by relying upon throttling valves as the only means to control flow. A more energy-efficient approach to this issue is use a variable-speed drive. The 30RB is now available with an optional variable-speed hydronic package with sensorless technology to meet this market requirement.

The major cost of a pump over its lifetime will be energy consumption and maintenance, and both of these factors will be reduced using variable-speed pumping. Energy is saved by the combination of lowering the pump speed in conjunction with the resulting lowering of pumping system resistance when conditions permit. Maintenance benefits from the sensorless pumping system include the lack of the need to maintain remote sensors as well as the beneficial effects of lower speed/pressure on the pump and pump bearings.

Another advantage associated with variable-speed pumping is reduced system noise in part-load operation when the pump is running at lower speeds. The variable-speed pump package offered on the 30RB is offered both in single and dual-pump designs. In the dual pump case, in which one pump is the back-up of the other, each pump connection is fitted with an isolation valve which allows one pump to be isolated for service with the other pump still operating.

As already mentioned, the 30RB variable-speed hydronic package employs sensorless technology. The term "sensorless" means that no remote sensors are required for pump operation. The sensorless pump control monitors system requirements from pump speed and power. The hydronic unit is provided with a predefined control curve to automatically adjust speed at all operating conditions. Pump performance and characteristic curves for multiple speeds are programmed into the speed-controller memory. The pre-programmed information includes power, pressure and flow throughout the entire range of the pump. During chiller operation, the power and speed of the pump are monitored. This enables the controller to establish the hydraulic performance, and to position the pump's head-flow characteristic. Although this curve is pre-defined, it is also fully field adjustable. The pump has a graphical user interface, and the graphic keypad can also be used to allow manual pump speed control.

This variable-speed pumping system easily connects to BMS (Building Management System) systems (BACnet is standard, and LON can be obtained via special order). The pumps may be controlled directly by the BMS system. The sensorless feature can also be switched off to allow the use of either a 0 to 10 VDC signal or a 0 to 20 mA signal.

For multiple chiller applications employing the variable-speed pumping package, such as chillers operated in a parallel arrangement, the drives must be connected by control wiring and set up to run the same speed. This is to prevent surging or hunting of the speed set point. One drive will act as the master while the other slave drive will run at the same speed. The master drive may be controlled by a 0 to 10 VDC signal, a 0 to 20 mA signal, or a BMS. The drive must be configured to not use the sensorless function in this arrangement.

A typical example of a chiller operating with a variable-speed pumping system would be the case when the user requires the chiller to operate with a constant fluid temperature difference as the load is reduced. This can be accomplished with the 30RB variable-speed pumping package with the understanding that the minimum allowable flow for the chiller must be respected. Once that limit is reached, the flow cannot be further reduced. To accomplish this purpose, the minimum speed of the drive is preset based upon the chiller size that is being employed.

As a specific example, let us say the schedule calls for a 100-ton, fresh-water chiller, and it is desired to have a constant 10-degree temperature difference in part load operation (say 54 to 44 F). The schedule calls for 240 gpm at full load based upon the desired capacity and the fluid temperature difference. A constant temperature difference in part load operation is essentially the same as providing flow in direct proportion to chiller load. In the present example, this means that 100% load will run at the scheduled 240 gpm, 90% load will be 216 gpm, etc. down to the minimum allowable flow for this unit size, which, in the case of a 30RB100, is 120 gpm. The chiller in this example will therefore be able to run down to 50% load while approximately maintaining a constant 10 degree fluid temperature difference, and then the flow will be held constant for all lower loads. Throughout the range in which flow is reduced (down to minimum allowable flow), the pump speed is proportionally reduced, resulting in pump energy savings.

Application data (cont)

Fluid loop volume

The volume in circulation must equal or exceed 3 gal. per nominal ton (3.25 L per kW) of cooling for temperature stability and accuracy in normal air conditioning applications. In process cooling applications, or for operation at ambient temperature below 32 F (0° C) with low loading conditions, there should be from 6 to 10 gal. per ton (6.5 to 10.8 L per kW). To achieve this volume, it is often necessary to install a tank in the loop.

Tank should be baffled to ensure there is no stratification and that water (or brine) entering tank is adequately mixed with liquid in the tank.

TANK INSTALLATION

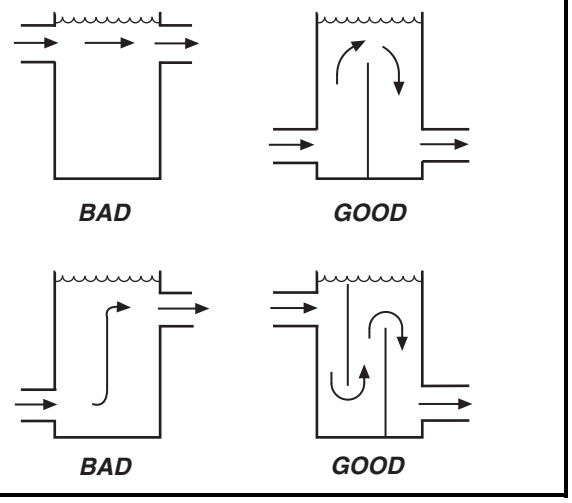

The piping between the chiller and the fluid loop volume tank can be done to allow the tank to be on the return side of the chiller (tank piped to chiller inlet) or the supply side of the chiller (tank piped to the chiller outlet). However, it is recommended that the tank be piped to the return side of the chiller to buffer any changes in load to allow more stable chiller operation.

Minimum time to power chiller before start-up

In order to ensure that the crankcase heaters are provided sufficient time to raise the crankcase temperature to the required operating point, power must be applied to the control circuit a minimum or 24 hours prior to chiller start-up. On 30RB chillers, the control circuit obtains its power via a control transformer off the main 3-phase power supply. Therefore, the main (3-phase) power is to be supplied at least 24 hours prior to chiller start-up unless there are special means for providing control power.

Cooler fouling factor

The fouling factor used to calculate tabulated ratings is 0.00010 $ft^2 \cdot hr \cdot °F/Btu$ (0.000018 $m^2 \cdot °C/W$). As fouling factor is increased, unit capacity decreases and compressor power increases. Corrections to published ratings can be approximated by using following multipliers:

FOULING FACTORS

FOULING FACTOR (English) ($ft^2 \cdot hr \cdot F/Btu$)	FOULING FACTOR (SI) ($m^2 \cdot C/W$)	CAPACITY MULTIPLIER	COMPRESSOR POWER MULTIPLIER
0.00025	0.000044	0.991	0.995
0.00050	0.000088	0.977	0.987
0.00075	0.000132	0.955	0.979
0.00175	0.000308	0.910	0.952

Cooler and hydronic system freeze protection

Freeze protection for down to –20 F (–28.9 C) for the cooler and hydronic package is available as a factory-installed option. Since power is sometimes lost for extended periods during winter storms, freeze protection provided by heater tapes will be effective only if a back-up power supply can be assured for the unit's control circuit, heater and cooler pump. If not protected with an antifreeze solution, draining the cooler and outdoor piping is recommended if the system will not be used during freezing weather conditions.

Two conditions that must be considered when determining antifreeze concentration are leaving water set point and ambient freeze conditions. Both of these parameters can help determine the recommended concentration level. Higher concentration must be used to adequately protect the machine.

NOTE: Use only antifreeze solutions approved for heat exchanger duty.

MINIMUM AND MAXIMUM COOLER FLOW RATES

SIZES 060-300

30RB SIZE	MINIMUM COOLER FLOW RATE (gpm)	MAXIMUM COOLER FLOW RATE (gpm)	MINIMUM LOOP VOLUME (gal.)	MINIMUM COOLER FLOW RATE (l/s)	MAXIMUM COOLER FLOW RATE (l/s)	MINIMUM LOOP VOLUME (liters)
060	72	288	180	5	18	681
070	84	336	210	5	21	795
080	96	384	240	6	24	908
090	108	432	270	7	27	1022
100	120	480	300	8	30	1136
110	132	528	330	8	33	1249
120	144	576	360	9	36	1363
130	156	624	390	10	39	1476
150	180	720	450	11	45	1703
160	192	768	480	12	48	1817
170	204	816	510	13	51	1931
190	228	912	570	14	58	2158
210	252	800	630	16	50	2385
225	270	800	675	17	50	2555
250	300	800	750	19	50	2839
275	330	800	825	21	50	3123
300	360	800	900	23	50	3407

SIZES 315-390

30RB SIZE	MINIMUM COOLER FLOW RATE (gpm)		MAXIMUM COOLER FLOW RATE (gpm)		MINIMUM LOOP VOLUME (gal.)	MINIMUM COOLER FLOW RATE (l/s)		MAXIMUM COOLER FLOW RATE (l/s)		MINIMUM LOOP VOLUME (liters)
	Module A	Module B	Module A	Module B		Module A	Module B	Module A	Module B	
315	192	192	768	768	945	12	12	48	48	3577
330	204	192	816	768	990	13	12	51	48	3748
345	204	204	816	816	1035	13	13	51	51	3918
360	228	204	912	816	1080	14	13	58	51	4088
390	228	228	912	912	1170	14	14	58	58	4429

For applications in which the leaving water temperature set point is less than 40 F (4.4 C), a suitable inhibited anti-freeze solution must be used. The solution concentration must be sufficient to protect the chilled water loop to a freeze protection (first crystals) concentration of at least 15° F (8.3° C) below the leaving water temperature set point.

If the chiller refrigerant or fluid lines are in an area where ambient conditions fall below 34 F (1° C), it is required that an antifreeze solution be added to protect the unit and fluid piping to a temperature of 15° F (8.3° C) below the lowest anticipated ambient temperature.

Select concentration based on either burst or freeze protection as dictated by the application. If the chiller does not operate during the winter, nor is a start-up expected, a burst protection concentration is recommended. This concentration may not be high enough to pump the fluid through the unit. Burst protection is typically a lower concentration that will provide better performance from the machine. If the chiller does operate during winter, a freeze protection concentration is recommended. This concentration will be high enough to keep the fluid in a condition that it can be pumped at low ambient conditions.

IMPORTANT: Glycol anti-freeze solutions are highly recommended since heater tapes provide no protection in the event of a power failure.

Consult glycol fluid manufacturers for burst protection recommendations and fluid specifications.

High ambient temperature operation

High outdoor ambient chiller start-up and operation is possible for standard 30RB chillers at ambient temperatures up to 125 F (52 C) at nominal voltage. In some cases, where return water temperature is expected to exceed 60 F (15.5 C), an accessory kit may be required.

Low ambient temperature operation

Units will start and operate down to 32 F (0° C) as standard.

NOTE: Minimum load on chiller must be above the minimum step of unloading.

Operation to –20 F (–29 C) requires optional low ambient head pressure control as well as wind baffles (field fabricated and installed to all units for operation below 32 F [0° C]) if wind velocity is anticipated to be greater than 5 mph (8 km/h). Inhibited propylene glycol or other suitable corrosion-resistant anti-freeze solution must be field supplied and installed in all units for unit operation below 34 F (1° C). Solution must be added to fluid loop to protect loop down to 15° F (8° C) below minimum operating ambient temperature. Concentration should be based on expected minimum temperature and either "Burst" or "Freeze" protection levels. At least 6 gal per ton (6.5 L per kW) of fluid volume is the recommended minimum for a moderate system load.

Application data (cont)

Altitude correction factors

Correction factors must be applied to standard ratings at altitudes above 2000 ft (610 m) using the following multipliers:

ALTITUDE CORRECTION FACTORS

ALTITUDE (ft)	ALTITUDE (m)	CAPACITY MULTIPLIER	COMPRESSOR POWER MULTIPLIER
2,000	610	0.99	1.01
4,000	1220	0.98	1.02
6,000	1830	0.97	1.03
8,000	2440	0.96	1.04
10,000	3050	0.95	1.05

Condenser airflow

Airflow restrictions on units with standard fans will affect the unit capacity, condenser head pressure, and compressor power input. Correction factors to be applied for external static restrictions up to 0.2 in. wg (50 Pa) are as follows:

EXTERNAL STATIC		CAPACITY MULTIPLIER	COMPRESSOR POWER MULTIPLIER
in. wg	Pa		
0.0	**0.0**	1.000	1.00
0.1	**25**	0.986	1.01
0.2	**50**	0.968	1.03

Condenser coil protection (*Enviro-Shield*™)

Refer to the environmental selection guides for more information. If the standard Novation® (microchannel) coil does not meet the corrosion requirements for a given application, additional coil options are available. For specific geographical recommendations, please refer to the NACO (North American Commercial Operations) Packaged Chiller Builder program.

Aluminum fin/copper tube coils are constructed of seamless copper tubes mechanically bonded to aluminum fins. The fins have wavy enhancements. These condenser coils are recommended with remote cooler applications. These coils are not recommended for corrosive environments.

Pre-coated aluminum-fin coils have a durable epoxy-phenolic coating applied to the fin prior to the fin stamping process to provide protection in mildly corrosive coastal environments. Pre-coated coils have an inert barrier between the aluminum fin and copper tube. This barrier electrically disconnects the dissimilar metals to minimize the potential for galvanic corrosion. This economical option provides substantial corrosion protection beyond the standard uncoated coil construction.

Copper-fin coils provide increased corrosion resistance compared to aluminum fin coils. All-copper coils eliminate bimetallic construction to eliminate the potential for galvanic corrosion. Application in industrial environments is not recommended due to potential attack from sulfur, sulfur oxide, nitrogen oxides, carbon and several other industrial airborne contaminants.

E-coated Novation® coils have an extremely flexible and durable epoxy coating uniformly applied to all coil surfaces. Unlike brittle phenolic dip and bake coatings, e-coat provides superior protection with unmatched flexibility, edge coverage, metal adhesion, thermal performance and most importantly, corrosion resistance. E-coated coils provide this protection since all coil surfaces are completely encapsulated from environmental contamination. This option provides the best protection for Novation coil technology.

E-coated aluminum-fin coils have the same flexible and durable epoxy coating as e-coated Novation coils. This option provides better protection compared to standard or pre-coated aluminum-fin coils in many environments.

E-coated copper-fin coils have the same flexible and durable epoxy coating as other e-coated coils. However, this option combines the natural salt and environmental resistance of all-copper construction with the highest level of corrosion protection within the round-tube, plate-fin type of coils.

Electrical/utility interests

Use of energy management practices can significantly reduce operating costs, especially during off-peak modes of operation. Demand limiting and temperature reset are 2 techniques for accomplishing efficient energy management. See Demand Limiting (also called load shedding) section below for further details.

Demand limiting (load shedding)

When a utility's demand for electricity exceeds a certain level, loads are shed to keep electricity demand below a prescribed maximum level. Typically, this happens on hot days when air conditioning is most needed. The energy management module (EMM) can be added to accomplish this reduction. Demand may be limited on unit by resetting fluid temperature, or by unloading the chiller to a given predetermined percentage of the load. Demand limit may also be driven by an external 4 to 20 mA signal. These features require a signal from an intelligent central control. Do not cycle demand limiter for less than 10 minutes on and 5 minutes off. Duty cycling cycles electrical loads at regular intervals regardless of need. This reduces the electrical operating costs of building by "fooling" demand indicating devices. Duty cycling of compressors or fans is not recommended since motor winding and bearing life will suffer from constant cycling.

Remote on-off control

Remote on-off control may be applied by hard-wired connection (see Controls and Troubleshooting literature) or by connection to a Carrier Comfort Network® (CCN) system.

Optional hydronic system selection

Select pump gpm from resulting chiller selection and total pressure loss in the system plus the chiller internal pressure loss.

NOTE: Maximum gpm (L/s), pressure and pump hp must not exceed maximum on pump curve.

NOTE: Optional hydronic system is available in both constant-speed and VFD configurations, as described in the "Variable Cooler Flow Rates" section.

Pump flow can be reduced by using the factory-supplied triple-duty valve up to 10%. Beyond that, impeller

trimming is recommended to reduce energy consumption. Follow local codes or ASHRAE 90.1 recommendations. Contact your Carrier representative for specific amount of trim required.

The AquaSnap® 30RB chiller will require a field-supplied expansion tank when the optional pumping package is provided.

The expansion tank is based on fluid type, temperature range, fluid pressure and loop volume.

Parallel chillers with hydronic packages require that pump inlets be equalized to prevent pump cavitation. Pump expansion tanks must be removed and located together in the common pump suction header. All materials needed for expansion tank relocation are field supplied. Appropriate measures must be taken for freeze protection.

NOTE: The hydronic package is not available on units equipped with the heat reclaim option.

Air separation

The AquaSnap 30RB chiller will require a field-supplied air separation device when the optional pumping package is provided.

Air must be controlled in a hydronic system if it is to perform properly. Air can block the flow of chilled water to its destinations and can cause cavitation in the pump, which will aerate the pump and potentially cause pump failure. The air separator is sized according to the total flow through the system. The air separator should be located inside the building. There are several types of air separators to choose from. For more information and product selection contact your local manufacturer's representative.

Heat reclaim

Whenever a chiller is operating, the heat removed from the cooler fluid as well as the energy associated with the compression process must be moved to another location. Under standard operation, an air-cooled chiller moves and releases this heat to the atmosphere. There are times, however, when it is beneficial to capture this heat and convert it into useful hot water.

The heat reclaim option has been developed to serve this purpose. Unlike many heat reclaim schemes seen on the market, the heat reclaim option that has been developed for the 30RB is full condensing. This means that this water-cooled condenser, which is in parallel with the standard air-cooled condenser, is capable of capturing all of the heat available from the chiller condensing process. The leaving water temperature can reach at maximum 131 F (55 C) under steady state and constant hot water flow conditions with an allowable hot water temperature range from 68 to 131 F (20 to 55 C).

To operate in the heat reclaim mode, there must be a simultaneous need for chilled water and tempered hot water. Just as the chiller operates in standard duty, the chiller always controls the leaving chilled water temperature. Consequently, the chiller will produce as much hot water as possible while maintaining the leaving chilled water temperature.

To generate hot water, the entering hot water temperature is compared to the hot water set point to determine the number of circuits necessary to maintain the entering hot water temperature. If the entering hot water temperature is below the customer-adjustable set point, one refrigeration circuit will automatically be changed over to the heat recovery mode to produce tempered hot water. In this mode, the chiller is operating as a water-cooled chiller with one circuit and as an air-cooled chiller with the other circuit.

Depending on the entering hot water requirements, the second circuit may also be switched to the heat recovery mode through the integrated controls. The entering hot water temperature is controlled by the cycling of each refrigerant circuit from the cooling-only to the heat recovery modes. When the hot water set point is satisfied, the chiller will transition back to the cooling-only mode as a conventional air-cooled chiller. The number of cycles is limited to 4 per hour.

The leaving hot-water temperature is a function of the entering hot water temperature, hot water flow and chiller capacity. In the heat reclaim mode, the entering hot water temperature, and not the leaving hot water temperature, is controlled. As a consequence, these applications are useful for make-up water or preheating of process hot water systems that have alternative means of controlling the desired hot-water temperature.

TYPICAL MULTIPLE CHILLER CONFIGURATION WITH AIR ELIMINATOR AND EXPANSION TANK LOCATION

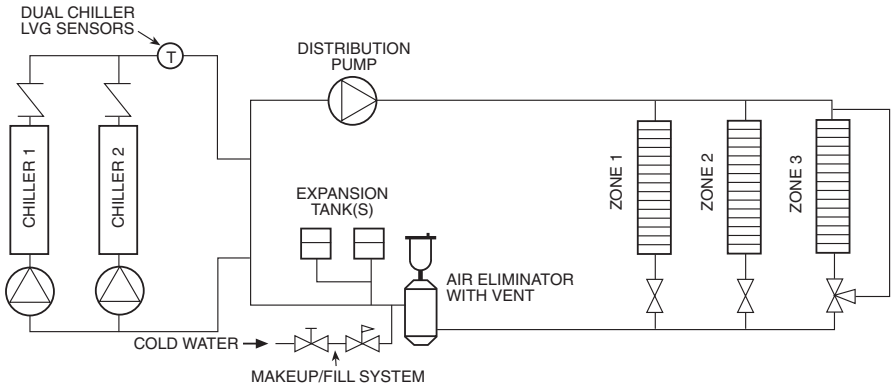

Application data (cont)

Energy efficiency — When the heat reclaim chiller is simultaneously producing hot water and satisfying the cooling load, the overall total COP will be very high. As an example of the benefits of a heat reclaim chiller with regard to total COP, if we look the performance of a nominal 110 ton air-cooled chiller with heat reclaim we can see the energy advantages based on the total COP.

Chiller Performance at AHRI Conditions with Heat Reclaim (104 F/114 F) in Operation:

Cooling Capacity 96.3 tons (339.0 kW)

Input Power 121.0 kW

Heating Output 1,548 MBH (453 kW)

$$\frac{453 \text{ kW} + 339 \text{ kW}}{121.0 \text{ kW}}$$

COP (TOTAL) = 6.5

Head pressure control — A form of head pressure control is required while in the heat reclaim mode. In order to meet this requirement, a 3-way control valve must be field-installed. Since the hot water temperature at start-up may be very low, the 3-way valve is to be located as close to the heating condenser as possible so that this valve can quickly accomplish its purpose of maintaining the minimum required head pressure. In this regard, the 3-way valve is to be located with 40 ft (12.2 m) of the heating condenser.

The 30RB chiller uses an analog output to control this valve. See figure below. A minimum loop volume of 6 gallons per ton of heating (0.5 to 0.83 gallons [1.9 to 3.1 L] per MBH of heating) capacity is necessary. In some cases, this will require the installation of a hot-water buffer tank.

THREE-WAY HEAD PRESSURE CONTROL VALVE

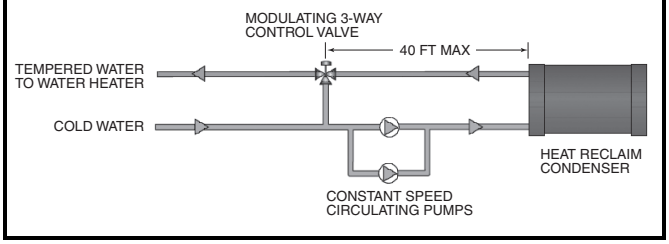

NOTE: Locate the 3-way valve as close as possible to the chiller to minimize head pressure control response time.

Operating limits — With a properly installed 3-way water valve, the minimum hot-water inlet temperature can be as low as 40 F (4 C) during system start-up. The hot water flow range is from 2 to 4 gpm per heating ton (0.13 to 0.25 L per minute). See the Heat Recovery Operation Envelope tables on this page for the allowable range of chiller operating conditions when the heat reclaim option has been selected.

Freeze protection — The heat reclaim condenser is located within the standard chiller envelope. Therefore, this device, as well as its associated water piping, must be located outdoors. A form of freeze protection must be provided. The heating condenser is provided with a heater that will accomplish freeze protection down to 0° F (–17.8 C). If a unit controls the water pump/valves, allowing for flow through the condenser, the unit is protected from freezing down to –20 F (–28.9 C). In addition, the same guideline for cooler freeze protection and preparation for winter shutdown must be followed. The Carrier warranty does not cover damage due to freezing. The piping, however, must either be provided with heat trace or an antifreeze solution must be added to the hot water fluid.

Adding antifreeze solution is the only certain means of protecting the unit from freeze-up if the heater fails or electrical power is interrrupted or lost while temperatures are below 32 F (0° C).

General heat reclaim application data — The heat reclaim option may be selected for chiller sizes 30RB060-190, and exclusively with MCHX coils (either uncoated or e-coated). No hydronic package option is available in conjunction with the heat reclaim option to conserve chiller footprint. As a result, the overall chiller dimensions are unchanged when this option is selected. The cooler water piping connections and the additional heating condenser piping details are shown for this option in the Dimensions section.

HEAT RECOVERY OPERATION ENVELOPE (STEADY STATE CONDITIONS REQUIRED)

NORMAL COOLING MODE USING AIR-COOLED CONDENSERS

COOLING ONLY MODE		CONDITIONS		
		Min	Nominal	Max
Condenser OAT	F	-20*	95	125
	C	-29*	35	52
Cooler EWT/LWT	F	38 (LWT)	54/44	60 (LWT)
	C	3 (LWT)	12/7	16 (LWT)

LEGEND

EWT — Entering Water (Fluid) Temperature
LWT — Leaving Water (Fluid) Temperature
OAT — Outdoor Air Temperature

* With low-ambient option.

HEAT RECOVERY MODE USING WATER-COOLED CONDENSERS

HEAT RECOVERY MODE		CONDITIONS		
		Min	Nominal	Max
Condenser EWT/LWT	F	68* (EWT)	104/114†	131 (LWT)
	C	20* (EWT)	40/46†	55 (LWT)
Cooler EWT/LWT	F	38 (LWT)	54/44	59 (LWT)
	C	3 (LWT)	12/7	15 (LWT)

LEGEND

EWT — Entering Water (Fluid) Temperature
LWT — Leaving Water (Fluid) Temperature

* Install three-way valve controls as required to ensure 68 F (20 C) minimum entering condenser temperature.
†Condenser water flow must be maintained such that the maximum heating condenser water temperature rise is no more than 20° F (11° C) and the minimum heating condenser water temperature rise is no less than 5° F (3° C).

Guide specifications

Outdoor Air-Cooled Liquid Chiller

HVAC Guide Specifications

Size Range: **60 to 390 Tons (210 to 1370 kW) Nominal**

Carrier Model Number: **30RB**

Part 1 — General

1.01 SYSTEM DESCRIPTION

Microprocessor controlled, air-cooled liquid chiller utilizing scroll compressors, low sound fans and optional hydronic pump system.

NOTE: Hydronic pump packages are only available on 30RB060-190 units. Hydronic pump packages are not available when optional heat reclaim is selected.

1.02 QUALITY ASSURANCE

A. Unit shall be rated in accordance with AHRI Standard 550/590, latest edition (U.S.A.) and all units shall be ASHRAE 90.1 compliant.

B. Unit construction shall comply with ASHRAE 15 Safety Code, UL latest edition, and ASME applicable codes (U.S.A. codes).

C. Unit shall be manufactured in a facility registered to ISO 9001 Manufacturing Quality Standard.

D. Unit shall be full load run tested at the factory.

1.03 DELIVERY, STORAGE AND HANDLING

A. Unit controls shall be capable of withstanding 150 F (66 C) storage temperatures in the control compartment.

B. Unit shall be stored and handled per unit manufacturer's recommendations.

Part 2 — Products

2.01 EQUIPMENT

A. General:

Factory assembled, single-piece or factory-matched duplex chassis, air-cooled liquid chiller. Contained within the unit cabinet shall be all factory wiring, piping, controls, refrigerant charge (R-410A), and special features required prior to field start-up.

B. Unit Cabinet:

1. Frame shall be of heavy-gage, painted galvanized steel.
2. Cabinet shall be galvanized steel casing with a baked enamel powder or pre-painted finish.
3. Cabinet shall be capable of withstanding 500-hour salt spray test in accordance with the ASTM (U.S.A.) B-117 standard.

C. Fans:

1. Condenser fans shall be direct-driven, 9-blade airfoil cross-section, reinforced polymer construction, shrouded-axial type, and shall be statically and dynamically balanced with inherent corrosion resistance.
2. Air shall be discharged vertically upward.
3. Fans shall be protected by coated steel wire safety guards.

D. Compressor/Compressor Assembly:

1. Fully hermetic scroll type compressors.
2. Direct drive, 3500 rpm (60 Hz), protected by motor temperature sensors, suction gas cooled motor.
3. External vibration isolation rubber-in-shear.
4. Each compressor shall be equipped with crankcase heaters to minimize oil dilution.

E. Cooler:

1. Shell-and-tube type, direct expansion.
2. Tubes shall be internally enhanced seamless-copper type rolled into tube sheets.
3. Shall be equipped with Victaulic-type water connections.
4. Shell shall be insulated with $^3/_4$-in. (19-mm) PVC foam (closed-cell) with a maximum K factor of 0.28.
5. Design shall incorporate a minimum of 2 independent direct-expansion refrigerant circuits.
6. Cooler shall be tested and stamped in accordance with ASME Code for a refrigerant working side pressure of 445 psig (3068 kPa). Cooler shall have a maximum water-side pressure of 300 psig (2068 kPa).
7. Cooler shall be provided with a factory-installed flow switch.

F. Condenser:

1. Coil shall be air-cooled Novation® heat exchanger technology with microchannel (MCHX) coils and shall have a series of flat tubes containing a series of multiple, parallel flow microchannels layered between the refrigerant manifolds. Coils shall consist of a two-pass arrangement. Coil construction shall consist of aluminum alloys for fins, tubes, and manifolds in combination with a corrosion-resistant coating.
2. Tubes shall be cleaned, dehydrated, and sealed.
3. Assembled condenser coils shall be leak tested and pressure tested at 656 psig (4522 kPa).

G. Refrigeration Components:

Refrigerant circuit components shall include replaceable-core filter drier, moisture indicating sight glass, electronic expansion device, discharge service valve and liquid line service valves, and complete operating charge of both refrigerant R-410A and compressor oil.

H. Controls, Safeties, and Diagnostics:

1. Unit controls shall include the following minimum components:
   a. Microprocessor with non-volatile memory. Battery backup system shall not be accepted.

b. Separate terminal block for power and controls.
c. Control transformer to serve all controllers, relays, and control components.
d. ON/OFF control switch.
e. Replaceable solid-state controllers.
f. Pressure sensors shall be installed to measure suction and discharge pressure. Thermistors shall be installed to measure cooler entering and leaving fluid temperatures as well as optional heat reclaim condenser entering and leaving fluid temperatures, and refrigerant pump down pressure and temperature.

2. Unit controls shall include the following functions:
   a. Automatic circuit lead/lag.
   b. Hermetic scroll compressors are maintenance free and protected by an auto-adaptive control that minimizes compressor wear.
   c. Capacity control based on leaving chilled fluid temperature and compensated by rate of change of return-fluid temperature with temperature set point accuracy to 0.1° F (0.06° C).
   d. Limiting the chilled fluid temperature pull-down rate at start-up to an adjustable range of 0.2° F to 2° F (0.11° C to 1.1° C) per minute to prevent excessive demand spikes at start-up.
   e. Seven-day time schedule.
   f. Leaving chilled fluid temperature reset from return fluid and outside air temperature.
   g. Chilled water pump and optional heat reclaim condenser water pump start/stop control and primary/standby sequencing to ensure equal pump run time.
   h. Dual chiller control for parallel chiller applications without addition of hardware modules and control panels (additional thermistors and wells are required).
   i. Timed maintenance scheduling to signal maintenance activities for pumps, strainer maintenance and user-defined maintenance activities.
   j. Low ambient protection to energize cooler and optional heat reclaim or hydronic system heaters.
   k. Periodic pump start to ensure pump seals are properly maintained during off-season periods.
   l. Single step demand limit control activated by remote contact closure.
   m. Generation of 0 to 10 vdc signal to control 3-way valve position when optional heat reclaim is employed.
   n. Nighttime sound mode to reduce the sound of the machine by a user-defined schedule.

3. Diagnostics:
   a. The control panel shall include, as standard, a scrolling marquee display capable of indicating the safety lockout condition by displaying a code for which an explanation may be scrolled at the display with time and date stamp.
   b. Information included for display shall be:
      1) Compressor lockout.
      2) Loss of charge.
      3) Low fluid flow.
      4) Cooler coil and optional heat reclaim coil freeze protection.
      5) Cooler set point.
      6) Optional heat reclaim set point.
      7) Chilled water reset parameters.
      8) Thermistor and transducer malfunction.
      9) Entering and leaving-fluid temperature.
      10) Evaporator and condenser pressure.
      11) System refrigerant temperatures.
      12) Chiller run hours.
      13) Compressor run hours.
      14) Compressor number of starts.
      15) Time of day:
         a) Display module, in conjunction with the microprocessor, must also be capable of displaying the output (results) of a service test. Service test shall verify operation of every switch, thermistor, fan, and compressor before chiller is started.
         b) Diagnostics shall include the ability to review a list of the 30 most recent alarms with clear language descriptions of the alarm event. Display of alarm codes without the ability for clear language descriptions shall be prohibited.
         c) An alarm history buffer shall allow the user to store no less than 30 alarm events with clear language descriptions, time and date stamp event entry.
         d) The chiller controller shall include multiple connection ports for communicating with the local equipment network, the Carrier Comfort Network® (CCN) system and access to chiller control functions from any point on the chiller.
         e) The control system shall allow software upgrade without the need for new hardware modules.
      16) Crankcase heater failure.

4. Safeties:
   a. Unit shall be equipped with thermistors and all necessary components in conjunction

with the control system to provide the unit with the following protections:

1) Loss of refrigerant charge.
2) Reverse rotation.
3) Low chilled fluid temperature.
4) Thermal overload.
5) High pressure.
6) Electrical overload.
7) Loss of phase.
8) High heat reclaim leaving fluid temperature.

b. Condenser fan and factory pump motors shall have external overcurrent protection.

I. Operating Characteristics:

1. Unit shall be capable of starting and running at outdoor ambient temperatures from 32 F to 125 F (0° to 52 C) for all sizes.
2. Unit shall be capable of starting up with 95 F (35 C) entering fluid temperature to the cooler.

J. Motors:

Condenser-fan motors shall be totally enclosed single-speed, 3-phase type with permanently lubricated bearings and Class F insulation.

K. Electrical Requirements:

1. Unit/module primary electrical power supply shall enter the unit at a single location (some chiller voltage/size combinations require 2 power supplies).
2. Unit shall operate on 3-phase power at the voltage shown in the equipment schedule.
3. Control points shall be accessed through terminal block.
4. Unit shall be shipped with factory control and power wiring installed.

L. Chilled Water Circuit:

1. Chilled water circuit shall be rated for 300 psig (2068 kPa). Units with optional pump package are rated for 150 psig (1034 kPa) working pressure.
2. Thermal dispersion proof of flow switch shall be factory installed and wired.
3. Optional hydronic package:
   a. With or without VFD (variable frequency drive) (30RB060-190 units only):
      1) Field pipe connections shall be Victaulic type.
      2) Optional single or primary/stand-by operation pump systems. Dual pump systems shall have a pump discharge check valve.
      3) Pumps shall be vertical in-line, single stage design, and capable of being serviced without disturbing piping connections.
         a) Pump casing shall be of class 30 cast iron.
         b) The impeller shall be of cast bronze, closed type, dynamically balanced, keyed to the shaft and secured by locking cap screw.
         c) The hydronic kit will be provided with a flush line connection to ensure lubrication at the seal face and allow for positive venting of the seal chamber.
         d) Each port shall be fitted with an isolation valve that allow the units to operate in parallel or standby, yet may be used to isolate one pumping unit for servicing or removal with the other pump still running.
         e) Pump shall be rated for 150 psig (1034 kPa) working pressure.
         f) The pump case shall have gage tappings at the suction and discharge nozzles and include drain ports.
         g) Dual pumps shall allow for the servicing of one pump without draining the chilled water loop.
         h) Motors shall be premium efficiency, Totally Enclosed Fan Cooled (TEFC) 3-phase type with grease lubricated ball bearings.
         i) Each pump shall be factory tested per Hydraulic Institute Standards.
      4) Pressure/temperature taps (3) shall be factory installed to measure the pressure differential across the pump and across the strainer.
      5) Combination valve (which includes check, isolation, and modulation) shall be factory installed. Pressure/temperature taps (2) shall be factory installed to measure the pressure differential across the combination valve.
      6) Hydronic assembly shall have factory-supplied electric freeze protection to –20 F (–29 C).
      7) Piping shall be Schedule 40 black steel.
      8) Cast iron or ductile iron body strainer with 8 mesh screen. A factory-installed, removable fine mesh clean-out strainer for initial run period shall be included.
   b. With VFD (these comments are applicable in addition to the comments in section a when the VFD hydronic package is employed [30RB060-190 units only]):
      1) The drive shall be of the VVC-PWM (voltage vector control - pulse with modulation) type, providing near unity displacement power factor without the need for external power factor correction capacitors at all loads and speeds.
      2) The drive and motor protection shall include; motor phase to ground fault, loss of supply phase, over voltage, under voltage, motor over temperature,

inverter overload, over current. Over current is not allowed, ensuring hydronic units will not overload the motor at any point in the operating range of the unit.

3) Sensorless control software shall be available in the hydronic unit to provide automatic speed control without the need for pump mounted (internal/external) or remotely mounted differential pressure system feedback sensors. Control mode setting and minimum/maximum head set points shall be set at the factory and be user adjustable via the programming interface.
4) The integrated control shall incorporate an integrated graphical user interface that shall provide running and diagnostic information and identify faults and status in clear English language. Faults shall be logged/recorded for review at a later date. It shall be possible to upload parameters from one drive into the non-volatile memory of a computer and download the parameters into other drives requiring the same settings. The key pad shall incorporate Hand-Off-Auto pushbuttons to enable switching between BMS and manual control. The drive shall incorporate a USB port for direct connection to a PC and an RS485 connection with Modbus RTU protocol. Optional protocols available should include BACnet and Lonworks.
5) The control shall have the following additional features: Sensorless override for BMS, manual pump control or closed loop PID control; programmable skip frequencies and adjustable switching frequency for noise/vibration control; auto alarm reset; motor pre-heat function; six programmable digital inputs; two analog inputs; one programmable analog/digital output; two volt-free contacts.
6) The hydronic unit shall be capable of operating in any of the following control modes:
   a) Duty pump and standby pumps with Sensorless control
   b) Duty pump and standby pumps with remote sensor or building system (BAS) control.

M. Special Features:

Certain standard features are not applicable when the features designated by * are specified. For assistance in amending the specifications, contact your Carrier representative.

* 1. Low Ambient Head Pressure Control:

Unit shall be capable of running at outdoor ambient temperatures down to –20 F (–29 C) with the addition of antifreeze in the cooler circuit, wind baffles, and field-installed or factory-installed solid-state head pressure control with condenser coil minimum step capacity temperature sensor.

2. Unit-Mounted Non-Fused Disconnect:

Unit shall be supplied with factory-installed, non-fused electrical disconnect for main power supply. This option is not available on 30RB060-120 with dual point power.

3. Optional Condenser Coil Materials:

a. E-coated microchannel coils:

E-coated aluminum microchannel coil shall have a flexible epoxy polymer coating uniformly applied to all coil external surface areas without material bridging between fins or louvers. Coating process shall ensure complete coil encapsulation, including all exposed fin edges. E-coat shall have a thickness of 0.8 to 1.2 mil with top coat having a uniform dry film thickness from 1.0 to 2.0 mil on all external coil surface areas including fin edges. E-coated coils shall have superior hardness characteristics of 2H per ASTM D3363-00 and cross hatch adhesion of 4B-5B per ASTM D3359-02. Impact resistance shall be up to 160 in./lb (ASTM D2794-93). E-coated coil shall have superior impact resistance with no cracking, chipping, or peeling per NSF/ANSI 51-2002 Method 10.2.

b. Aluminum fin/copper tube coils:

Coil shall be constructed of seamless copper tubes mechanically bonded to aluminum fins. Fins shall have wavy enhancements. These condenser coils are recommended with remote cooler applications. These coils are not recommended for corrosive environments.

c. Pre-coated aluminum-fin coils:

Coil shall have a durable epoxy-phenolic coating to provide protection in mildly corrosive coastal environments. Coating shall be applied to the aluminum fin stock prior to the fin stamping process to create an inert barrier between the aluminum fin and copper tube. Epoxy-phenolic barrier shall minimize galvanic action between dissimilar metals.

d. Copper-fin coils:

Coil shall be constructed of copper fins mechanically bonded to copper tubes and copper tube sheets. Galvanized steel tube sheets shall not be acceptable. A polymer strip shall prevent coil assembly from

contacting sheet metal coil pan to minimize potential for galvanic corrosion between the coil and pan. All-copper construction shall provide protection in moderate coastal applications.

e. E-coated aluminum-fin coils:

Coil shall have a flexible epoxy polymer coating uniformly applied to all coil surface areas without material bridging between fins. Coating process shall ensure complete coil encapsulation. Color shall be high gloss black with gloss — 60° of 65 to 90% per ASTM ID523-89. Uniform dry film thickness from 0.8 to 1.2 mil on all surface areas including fin edges. Superior hardness characteristics of 2H per ASTM D3363-92A and cross hatch adhesion of 4B-5B per ASTM D3359-93. Impact resistance shall be up to 160 in./lb (ASTM D2794-93). Humidity and water immersion resistance shall be up to minimum 1000 and 250 hours respectively (ASTM D2247-92 and ASTM D870-92). Corrosion durability shall be confirmed through testing to no less than 3000 hours salt spray per ASTM B117-90. Coil construction shall be aluminum fins mechanically bonded to copper tubes.

f. E-coated copper-fin coils:

Coil shall have a flexible epoxy polymer coating uniformly applied to all coil surface areas without material bridging between fins. Coating process shall ensure complete coil encapsulation. Color shall be high gloss black with gloss — 60° of 65 to 90% per ASTM D523-89. Uniform dry film thickness from 0.8 to 1.2 mil on all surface areas including fin edges. Superior hardness characteristics of 2H per ASTM D3363-92A and cross hatch adhesion of 4B-5B per ASTM D3359-93. Impact resistance shall be up to 160 in./lb (ASTM D2794-93). Humidity and water immersion resistance shall be up to minimum 1000 and 250 hours respectively (ASTM D2247-92 and ASTM D870-92). Corrosion durability shall be confirmed through testing to no less than 3000 hours salt spray per ASTM B117-90. Coil construction shall be copper-fins mechanically bonded to copper tube sheets. Galvanized steel tube sheets shall not be acceptable. A polymer strip shall prevent coil assembly from contacting sheet metal coil pan to maintain coating integrity and minimize corrosion potential between the coil and pan.

4. Optional Heat Reclaim Condenser:

a. Condenser shall be capable of full heat recovery.

b. Condenser shall be water cooled, with Victaulic piping connections.

c. Condenser shall be flooded, shell and tube type, with mechanically cleanable tubes and removable heads.

d. Shell shall be insulated with ¾ inch (19 mm) PVC foam (closed cell) with a maximum K factor of 0.28.

e. Tubes shall be internally enhanced, seamless copper type, rolled into tube sheets.

f. Condenser shall be tested and stamped in accordance with ASME Code for a refrigerant working pressure of 656 psig (4522 kPa). The condenser shall have a maximum water-side pressure of 300 psig (2068 kPa).

g. Condenser shall be leak and pressure tested at 722 psig (4977 kPa).

h. Condenser design shall incorporate 2 independent refrigerant circuits.

i. Condenser shall have a factory-installed and wired thermistor in both the entering and leaving nozzles, as well as a factory-installed and wired flow switch.

j. Condenser shall be equipped with a heater which is controlled by the chiller.

k. Condenser shall control the return (entering) hot water temperature.

l. Condenser shall have a vent and drain.

m. Condenser shall have a relief valve per circuit (2 total).

NOTE: When a heat reclaim condenser is specified, the air-cooled condenser coils must be either MCHX or e-coated MCHX type.

5. Remote Enhanced Display:

Unit shall be supplied with indoor-mounted, remote, 40-character per line, 16-line display panel for field installation.

6. Medium Temperature Brine:

Unit shall be factory modified to start and operate at leaving chilled fluid temperatures between 15 F (–9.4 C) and 30 F (–1.1 C). This option is not required for 30RB060-100 units.

7. Chillervisor System Manager Multi-Unit Control:

Field-installed control shall sequence between 2 and 8 chillers in parallel in a single system. System shall control chilled water pumps.

8. Minimum Load Control:

Unit shall be equipped with factory (or field) installed, microprocessor-controlled, minimum load control that shall permit unit operation down to a minimum of 15% capacity (varies with unit size).

Guide specifications (cont)

9. Energy Management Control Module:

   A factory or field-installed module shall provide the following energy management capabilities: 4 to 20 mA signals for leaving fluid temperature reset, cooling set point reset or demand limit control; 2-step demand limit control (from 0% to 100%) activated by a remote contact closure; and discrete input for "Ice Done" indication for ice storage system interface.

10. Condenser Coil Trim Panels and Security Grilles:

    Unit shall be supplied with factory or field-installed coil covers and painted grilles to protect the condenser coil and internal chiller components from physical damage.

11. Upper Hail Guard:

    Unit shall be equipped with a factory-installed option consisting of louvered panels on the ends of the machine which firmly fasten to the machine frame. These panels shall cover the unit from the top to the bottom of the coils, thus providing protection of the coils from hail damage.

12. Full Hail Guard:

    Unit shall be equipped with field-installed accessory consisting of hinged, louvered panels, which cover both ends of the unit. This accessory provides complete protection from hail.

13. Full End Screen:

    Unit shall be equipped with a factory-installed option consisting of louvered panels that cover the machine ends from top to bottom and firmly fasten to the machine frame. These end screens function as a privacy screen and also provide hail protection.

14. BACnet Communication Option:

    Shall provide factory-installed communication capability with a BACnet MS/TP network. Allows integration with i-Vu® Open control system or a BACnet building automation system.

15. BACnet Translator Control:

    Unit shall be supplied with factory or field-installed interface between the chiller and a BACnet Local Area Network (LAN, i.e., MS/TP EIA-485). Field programming shall be required.

16. LON Translator Control:

    Unit shall be supplied with factory or field-installed interface between the chiller and a Local Operating Network (LON, i.e., LonWorks FT-10A ANSI/EIA-709.1). Field programming is required.

17. Navigator™ Hand Held Display:
    a. Portable hand held display module with a minimum of 4 lines and 20 characters per line, of clear English, Spanish, Portuguese or French language.
    b. Display menus shall provide clear language descriptions of all menu items, operating modes, configuration points and alarm diagnostics. Reference to factory codes shall not be accepted.
    c. RJ-14 connection plug shall allow display module to be connected to factory-installed receptacle.
    d. Industrial grade coiled extension cord shall allow the display module to be moved around the chiller.
    e. Magnets shall hold the display module to any sheet metal panel to allow hands-free operation.
    f. Display module shall have NEMA 4x housing suitable for use in outdoor environments.
    g. Display shall have back light and contrast adjustment for easy viewing in bright sunlight or night conditions.
    h. Raised surface buttons with positive tactile response.

18. Touch Pilot™ Display:

    Unit shall be supplied with a remote mount touch screen display for network attachment to the chiller.

19. Compressor Suction Service Valve:

    Standard refrigerant discharge isolation and liquid valves shall enable service personnel to store the refrigerant charge in the cooler or condenser during servicing. This factory-installed option (one valve per refrigerant circuit) shall allow for further isolation of the compressor from the cooler vessel.

20. Suction Line Insulation:

    Insulation shall be tubular closed-cell insulation. This option shall be required with the medium temperature brine option and recommended for areas of high dewpoints where condensation may be a concern.

21. Freeze Protection Cooler Heaters:

    Cooler heaters shall provide protection from cooler freeze-up to –20 F (–29 C).

22. Remote Cooler Kit:

    Shall allow remote installation of cooler. Kit shall include expansion valve and flow switch cable extensions, and instructions.

23. CRN Cooler (Canada Only):

    Shall provide minor cooler modifications to meet Canadian code.

24. Service Option:

    The service option shall provide a remote service port for Navigator connection and a factory-installed convenience outlet includes 4-amp GFI (ground fault interrupt) receptacle with independent fuse protection. Convenience outlet shall be a 115-v female receptacle. Service option shall not be available with 380 v.

25. Low-Sound Compressor Enclosures:

    Shall provide sound reduction for the scroll compressors.

26. High SCCR (Short Circuit Current Rating):

    The optional high SCCR (short circuit current rating) device shall allow the chiller to tolerate a 65 kA (208/230 and 460-v units) or 25 kA (575-v units) short circuit current for a brief period of time while protecting downstream components. The high SCCR option shall provide a higher level of protection than the standard unit. This option is not available on any 208/230 volt applications, or on 30RB060-120 with dual-point power.

27. Dual Chiller Accessory Kit:

    For dual chiller applications, unit shall be provided with the additional hardware (thermistors, wells, connectors) required for proper system operation.

Manufacturer reserves the right to discontinue, or change at any time, specifications or designs without notice and without incurring obligations.