Product Data

GEMINI™ SELECT 09DPS018-030,09DPM035-130 Air-Cooled Condensers with PURON® Refrigerant (R-410A) 50/60 Hz

18 to 130 Nominal Tons (63 to 457 Nominal kW)

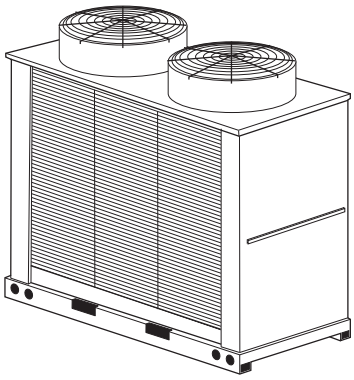

09DPS030 UNIT WITH LOW SOUND OPTION

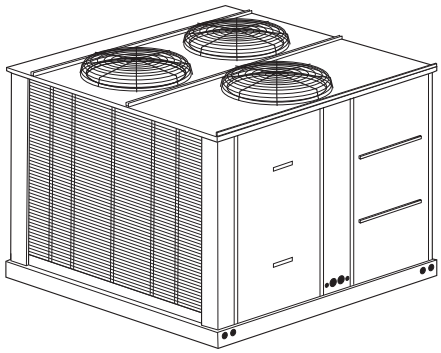

09DPM040 UNIT

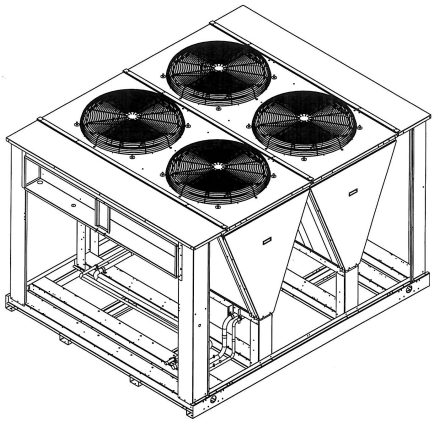

09DPM065 UNIT

the environmentally sound refrigerant

These dependable split systems match Carrier's 30MPA (R-410A) and 30HXA (R-134a) air-cooled condenserless chillers with the versatile outdoor 09DP remote air-cooled condensers for a wide selection of commercial cooling solutions.

- Matching 30MPA or 30HXA chillers and 09DP condensers are compatible with ASHRAE 90.1
- Chlorine-free, non-ozone depleting Puron (R-410A) and R-134a refrigerants
- Condenser coils feature the Novation® heat exchanger with microchannel coil technology
- 09DPS single-circuit units are offered in 18 to 30 ton sizes
- 09DPM single or dual-circuit units are offered in 35 to 130 ton sizes

Features/Benefits

The 09DP condensers offer the utmost in system configuration ideal for clinics, motels, schools, apartments, office buildings, and factories. These premium quality standard components ensure durable, efficient, and reliable operation.

The latest safety standards for 09DP units are certified to UL (Underwriters Laboratories) and CSA (Canadian Standards Association) standards, ETL approved.

Copyright 2011 Carrier Corporation

Features/Benefits (cont)

Versatility
The 09DP Series air-cooled remote condensers feature up to 2 refrigerant circuits, and can be matched with a wide variety of air-cooled condenserless chillers. Single-circuit condensers can operate with single or dual chillers. Dual-circuit condensers can operate with single or dual chillers.

Durable construction
All 09DP units have weatherized cabinets constructed of heavy-duty galvanized steel prepainted with corrosion resistant baked enamel. Inside and outside surfaces are protected to ensure long life and good appearance. The durable, galvanized steel, prepainted components exceed the requirements of the 500-hour salt spray test per ASTM (American Society for Testing and Materials) B117.

All 09DP condensers have Novation® heat exchangers with microchannel coil technology. The microchannel heat exchanger (MCHX) coils provide long-term reliability, high performance heat transfer, and significant savings in refrigerant charge. E-coated MCHX is offered as an option for harsh industrial or coastal conditions.

Refrigerant circuiting
The 09DPM units have single or dual independent circuit capability with factory included kit on all 09DPM units (field installation required). Each circuit is protected by a temperature fusible plug for safety.

Easier installation and service
The 09DP units are available with factory-installed options (e-coated MCHX coil, low sound fans, high short circuit current rating (SCCR) interrupt, Motormaster® V control, non-fused disconnect, and security grilles/hail guards) for every installation.

Greater system economy
Subcooling offers more cooling capacity. A specially designed liquid refrigerant circuit provides subcooling for increased capacity without additional power consumption. Subcooling liquid refrigerant also expands condenser applications by permitting condenser installation below the evaporator without subjecting the refrigerant to flashing before the expansion valve.

Quieter, more efficient operation
AeroAcoustic™ low sound fans provide efficient airflow and quiet operation.

Multi-circuit, multi-refrigerant capability
Choose the single-circuit 09DPS or single/dual-circuit 09DPM unit and realize separate cooling system economy on each circuit. Single-circuit units are offered in sizes 018 to 130. Dual-circuit units are offered in sizes 035 to 130. Using the 09DPM unit, save space and satisfy installation needs without the expense of smaller condensers with single circuitry. Models can be used with refrigerants R-410A or R-134a to meet individual system capacity requirements. A different refrigerant can be used with each independent cooling circuit. Units are shipped with R-410A pressure switches for field installation. Use of R-134a or R-22 refrigerants would require field-supplied and installed pressure switches.

Individual unit features
The 09DPS018-030 condenser units are available in 18, 20, and 30-ton sizes using a single coil design (with integral subcooling) that is used as single system. Units have vertical air discharge and contain a control box, 2 direct-drive fans and motors (one for size 018), and motor mounts.

The 09DPM035-060 condenser units are available in 35, 40, 50 and 60-ton sizes. The 09DPM035 units have 2 direct-drive fans, 2 motors and motor mounts. The 09DPM040 units have 3 direct-drive fans, 3 motors and motor mounts. The 09DPM050,060 units have 4 direct-drive fans, 4 motors and motor mounts. For all units, fan motors are 3-phase, TEAO (totally enclosed, air over). All units are equipped with a control box and 2 condenser coils with integral subcooling circuits. Each condenser is offered as a single circuit or dual circuit unit.

The 09DPM065-095 condenser units are available in 65, 75, 85, and 95-ton sizes. The 09DPM065 unit has 4 direct-drive fans, 4 motors and motor mounts, and 2 V coils. The 09DPM075 unit has 5 direct-drive fans, 5 motors and motor mounts. The 09DPM085,095 units have 6 direct-drive fans, 6 motors and motor mounts. All fan motors are 3-phase and are protected against single phasing conditions. The 09DPM075-095 units have 3 V coils.

The 09DPM115-130 condenser units are available in 115 and 130-ton sizes. The 09DPM115 unit has 7 direct-drive fans, 7 motors and motor mounts. The 09DPM130 unit has 8 direct-drive fans, 8 motors and motor mounts. The 09DPM115,130 units have 4 V coils.

All 09DP units are equipped with control box access panels, which allow for easy entrance into the control box. A tubing package is supplied with the dual-circuit condenser units (09DPM) for single or dual coil circuiting applications to facilitate field installations and maximize unit flexibility.

Coil split versatility
Model 09DPM coils can be split into one or 2 condensing circuits. Each 09DPM unit ships standard as a dual-circuit unit but can be field-modified to a single-circuit unit by installing the manifold kit that ships with the unit. Each circuit may handle a separate cooling system, using a different refrigerant if desired. Each circuit has a refrigerant subcooling circuit. This saves space and provides installation flexibility.

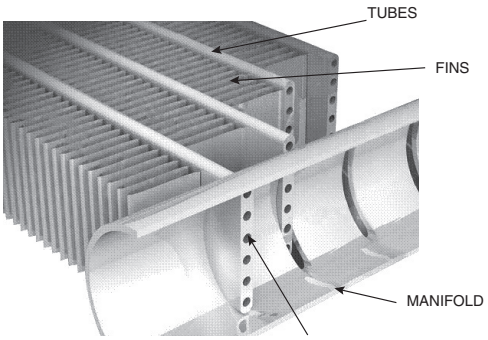

NOVATION® HEAT EXCHANGER TECHNOLOGY WITH MICROCHANNEL CONDENSER COILS

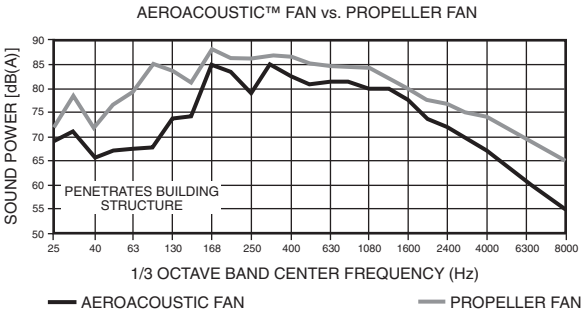

AEROACOUSTIC FAN VS PROPELLER FAN

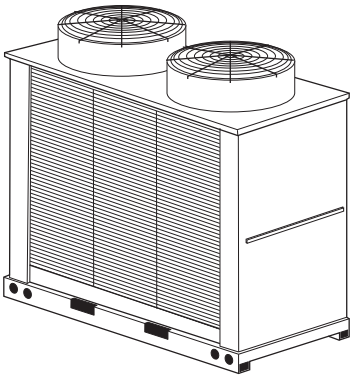

LOW SOUND OPTION

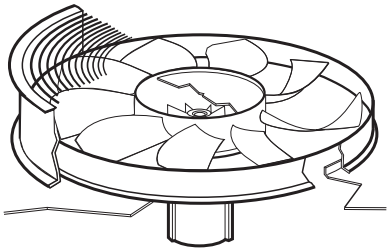

LOW-NOISE AEROACOUSTIC FAN

Table of contents

	Page
Features/Benefits	1-3
Model Number Nomenclature	4
Physical Data	5-10
Options and Accessories	11
Dimensions	12-16
Selection Procedure	17
Performance Data	18-21
Electrical Data	22-25
Typical Wiring Schematic	26
Typical Piping and Wiring	27,28
Application Data	29-32
Guide Specifications	33,34

Model number nomenclature

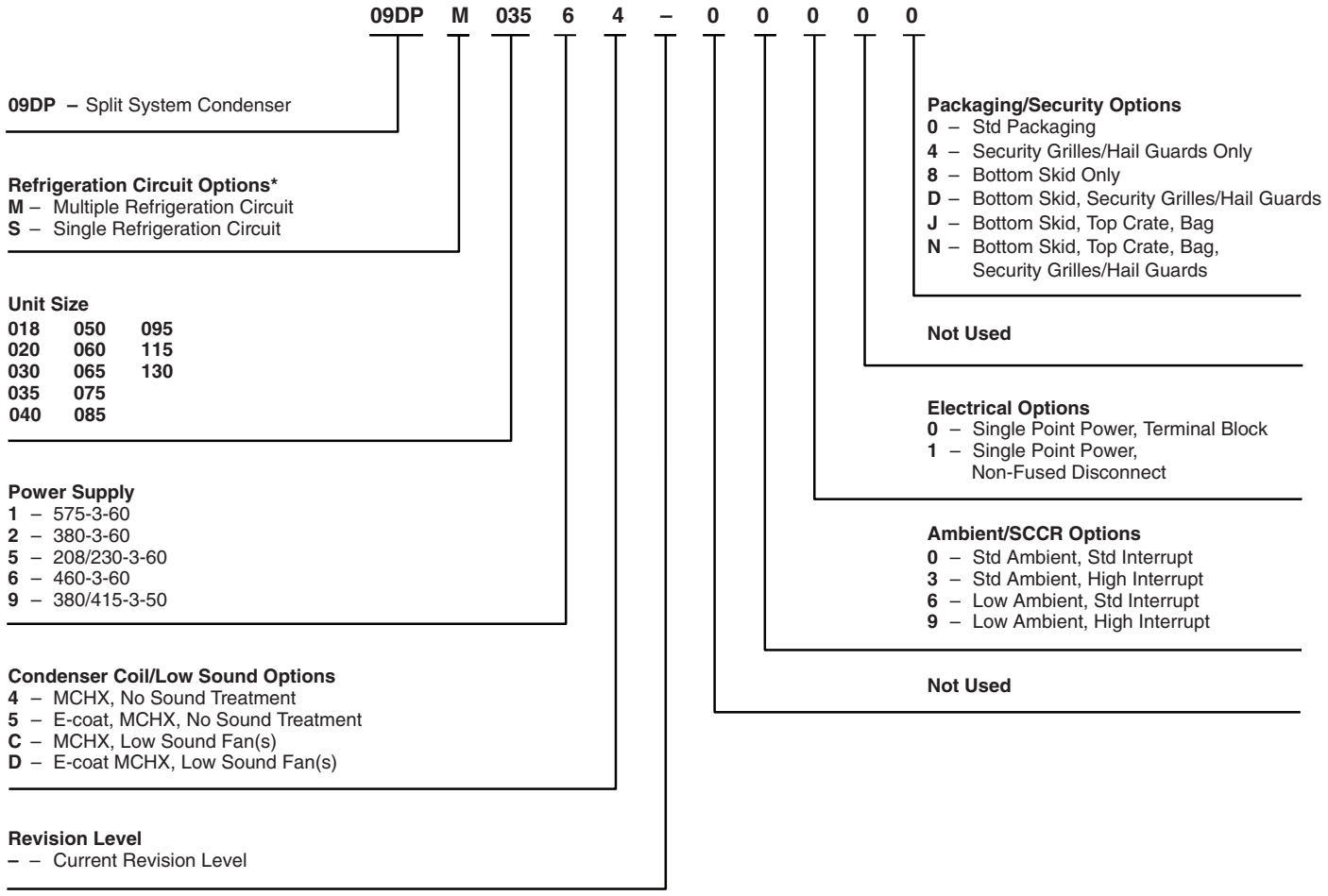

LEGEND

MCHX — Microchannel Heat Exchanger
SCCR — Short Circuit Current Rating

*09DPS units available in sizes 018-030. 09DPM units available in sizes 035-130.

Quality Assurance

Certified to ISO 9001:2000

Physical data

09DP018-040 UNITS — ENGLISH

09DP UNIT SIZE	09DPS018	09DPS020	09DPS030	09DPM035		09DPM040	
CAPACITY, 60 Hz (tons)*	20.7	33.1	37.7	43.3		55.0	
CAPACITY, 50 Hz (tons)*	17.2	27.6	31.4	36.1		45.8	
CIRCUIT	Single Circuit	Single Circuit	Single Circuit	Dual Circuit	Single Circuit	Dual Circuit	Single Circuit
OPERATING WEIGHTS (lb)							
Standard	638	719	869	1126		1204	
With Low Sound Option	656	755	905	1162		1258	
APPROXIMATE TOTAL REFRIGERANT CHARGE R-410A (lb)	9.6	12.0	12.0	24.0		24.0	
APPROXIMATE TOTAL REFRIGERANT CHARGE R-134a (lb)	11.1	13.9	13.9	27.7		27.7	
NITROGEN SHIPPING CHARGE	5 psig						
CONDENSER FANS							
Standard	Propeller Type - Direct Drive						
Quantity	1	2	2	2	2	3	3
Motor Hp (per fan)	1	1	1	1	1	1	1
RPM	1140 (60 Hz), 950 (50 Hz)						
Diameter (in.)	30						
Airflow (cfm) (60 Hz)†	11,300	18,500	20,900	22,700		32,000	
Airflow (cfm) (50 Hz)†	9420	15,420	17,420	18,920		26,670	
Total Watts (60 Hz)†	1600	3200	3200	3100		4800	
Total Watts (50 Hz)†	1333	2667	2667	2583		4000	
Low Noise	Plastic Type - Direct Drive						
Quantity	1	2	2	2	2	3	3
Motor Hp (per fan)	1	1	1	1	1	1	1
RPM	850 (60Hz), 700 (50 Hz)						
Diameter (in.)	30						
Airflow (cfm) (60 Hz)†	10,450	17,500	19,400	21,000		29,600	
Airflow (cfm) (50 Hz)†	8710	14,580	16,170	17,500		24,670	
Total Watts (60 Hz)†	1300	2600	2600	2500		3900	
Total Watts (50 Hz)†	1083	2167	2167	2083		3250	
MCHX COIL							
No. Coils per Circuit (Ckt A/Ckt B)		1		1	2	1	2
Circuit % (Ckt A/Ckt B)		100		50/50	100	50/50	100
Total Coils		1		2	2	2	2
sq ft	27.1	27.1	33.9	54.2	54.2	54.2	54.2
PIPING							
Pressure Relief	Fusible Plug on liquid lines of both circuits - 210 F						
Hot Gas Connection Line Size (in.)	$1\frac{3}{8}$	$1\frac{3}{8}$	$1\frac{3}{8}$	$1\frac{3}{8} + 1\frac{3}{8}$	$1\frac{5}{8}$	$1\frac{3}{8} + 1\frac{3}{8}$	$1\frac{5}{8}$
Liquid Connection Line Size (in.)	$\frac{5}{8}$	$\frac{5}{8}$	$\frac{5}{8}$	$\frac{5}{8} + \frac{5}{8}$	$\frac{7}{8}$	$\frac{5}{8} + \frac{5}{8}$	$\frac{7}{8}$
CHASSIS DIMENSIONS (ft-in.)							
Length	7-5	7-5	7-5	7-9	7-9	7-9	7-9
Width	3-5	3-5	3-5	7-5	7-5	7-5	7-5
Height							
Standard	5-1	5-1	6-2	5-1	5-1	5-1	5-1
Low Sound	5-7	5-7	6-7	5-7	5-7	5-7	5-7

LEGEND

MCHX — Microchannel Heat Exchanger

*Nominal heat rejection based on optimum refrigerant charge of R-410A with 15 F subcooling at 30 F temperature difference.

†Condenser fan airflow and power are for units operating at full load and 95 F ambient.

Physical data (cont)

09DP050-075 UNITS — ENGLISH

09DP UNIT SIZE	09DPM050		09DPM060		09DPM065		09DPM075	
CAPACITY, 60 Hz (tons)*	66.4		75.3		85.8		107.6	
CAPACITY, 50 Hz (tons)*	55.3		62.7		71.5		89.7	
CIRCUIT	Dual Circuit	Single Circuit	Dual Circuit	Single Circuit	Dual Circuit	Single Circuit	Dual Circuit	Single Circuit
OPERATING WEIGHTS (lb)								
Standard	1282		1524		1622		1846	
With Low Sound Option	1354		1596		1694		1936	
APPROXIMATE TOTAL REFRIGERANT CHARGE R-410A (lb)	24.0		24.0		35.2		44.0	
APPROXIMATE TOTAL REFRIGERANT CHARGE R-134a (lb)	27.7		27.7		40.7		50.8	
NITROGEN SHIPPING CHARGE	5 psig							
CONDENSER FANS								
Standard	Propeller Type - Direct Drive							
Quantity	4	4	4	4	4	4	5	5
Motor Hp (per fan)	1	1	1	1	1	1	1	1
RPM	1140 (60 Hz), 950 (50 Hz)							
Diameter (in.)	30							
Airflow (cfm) (60 Hz)†	39,250		41,800		45,000		56,250	
Airflow (cfm) (50 Hz)†	32,710		34,830		37,500		46,870	
Total Watts (60 Hz)†	6500		6400		6400		8000	
Total Watts (50 Hz)†	5417		5333		5333		6667	
Low Noise	Plastic Type - Direct Drive							
Quantity	4	4	4	4	4	4	5	5
Motor Hp (per fan)	1	1	1	1	1	1	1	1
RPM	850 (60Hz), 700 (50 Hz)							
Diameter (in.)	30							
Airflow (cfm) (60 Hz)†	36,300		38,800		41,600		52,000	
Airflow (cfm) (50 Hz)†	30,250		32,330		34,670		43,330	
Total Watts (60 Hz)†	5300		5200		5200		6500	
Total Watts (50 Hz)†	4417		4333		4333		5417	
MCHX COIL								
No. Coils per Circuit (Ckt A/Ckt B)	1	2	1	2	2	4	3/2	5
Circuit % (Ckt A/Ckt B)	50/50	100	50/50	100	50/50	100	60/40	100
Total Coils	2	2	2	2	4	4	5	5
sq ft	54.2	54.2	67.8	67.8	99.8	99.8	124.7	124.7
PIPING								
Pressure Relief	Fusible Plug on liquid lines of both circuits - 210 F							
Hot Gas Connection Line Size (in.)	$1\frac{3}{8} + 1\frac{3}{8}$	$1\frac{5}{8}$	$1\frac{3}{8} + 1\frac{3}{8}$	$1\frac{5}{8}$	$1\frac{3}{8} + 1\frac{3}{8}$	$1\frac{5}{8}$	$1\frac{5}{8} + 1\frac{3}{8}$	$2\frac{1}{8}$
Liquid Connection Line Size (in.)	$\frac{5}{8} + \frac{5}{8}$	$\frac{7}{8}$	$\frac{5}{8} + \frac{5}{8}$	$\frac{7}{8}$	$\frac{7}{8} + \frac{7}{8}$	$1\frac{1}{8}$	$\frac{7}{8} + \frac{7}{8}$	$1\frac{1}{8}$
CHASSIS DIMENSIONS (ft-in.)								
Length	7-9	7-9	7-9	7-9	9-3	9-3	12-8	12-8
Width	7-5	7-5	7-5	7-5	7-5	7-5	7-5	7-5
Height								
Standard	5-1	5-1	6-2	6-2	6-1	6-1	6-1	6-1
Low Sound	5-7	5-7	6-7	6-7	6-7	6-7	6-7	6-7

LEGEND

MCHX — Microchannel Heat Exchanger

*Nominal heat rejection based on optimum refrigerant charge of R-410A with 15 F subcooling at 30 F temperature difference.

†Condenser fan airflow and power are for units operating at full load and 95 F ambient.

09DP085-130 UNITS — ENGLISH

09DP UNIT SIZE	09DPM085		09DPM095		09DPM115		09DPM130	
CAPACITY, 60 Hz (tons)*	115.6		129.4		149.4		172.0	
CAPACITY, 50 Hz (tons)*	96.3		107.8		124.5		143.3	
CIRCUIT	Dual Circuit	Single Circuit	Dual Circuit	Single Circuit	Dual Circuit	Single Circuit	Dual Circuit	Single Circuit
OPERATING WEIGHTS (lb)								
Standard	1933		1933		2447		2533	
With Low Sound Option	2041		2041		2573		2677	
APPROXIMATE TOTAL REFRIGERANT CHARGE R-410A (lb)	52.8		52.8		61.6		70.4	
APPROXIMATE TOTAL REFRIGERANT CHARGE R-134a (lb)	61.0		61.0		71.1		81.3	
NITROGEN SHIPPING CHARGE	5 psig							
CONDENSER FANS								
Standard	Propeller Type - Direct Drive							
Quantity	6	6	6	6	7	7	8	8
Motor Hp (per fan)	1	1	1	1	1	1	1	1
RPM	1140 (60 Hz), 950 (50 Hz)							
Diameter (in.)	30							
Airflow (cfm) (60 Hz)†	67,500		67,500		78,750		90,000	
Airflow (cfm) (50 Hz)†	56,250		56,250		65,620		75,000	
Total Watts (60 Hz)†	9600		9600		11200		12800	
Total Watts (50 Hz)†	8000		8000		9333		10667	
Low Noise	Plastic Type - Direct Drive							
Quantity	6	6	6	6	7	7	8	8
Motor Hp (per fan)	1	1	1	1	1	1	1	1
RPM	850 (60Hz), 700 (50 Hz)							
Diameter (in.)	30							
Airflow (cfm) (60 Hz)†	62,400		62,400		72,800		83,200	
Airflow (cfm) (50 Hz)†	52,000		52,000		60,670		69,330	
Total Watts (60 Hz)†	7800		7800		9100		10400	
Total Watts (50 Hz)†	6500		6500		7583		8667	
MCHX COIL								
No. Coils per Circuit (Ckt A/Ckt B)	3/2	5	3/3	6	4/3	7	5/3	8
Circuit % (Ckt A/Ckt B)	60/40	100	50/50	100	57/43	100	63/37	100
Total Coils	5	5	6	6	7	7	8	8
sq ft	124.7	124.7	149.6	149.6	174.6	174.6	199.5	199.5
PIPING								
Pressure Relief	Fusible Plug on liquid lines of both circuits - 210 F							
Hot Gas Connection Line Size (in.)	$1\frac{5}{8} + 1\frac{3}{8}$	$2\frac{1}{8}$	$1\frac{5}{8} + 1\frac{5}{8}$	$2\frac{1}{8}$	$1\frac{5}{8} + 1\frac{5}{8}$	$2\frac{1}{8}$	$1\frac{5}{8} + 1\frac{5}{8}$	$2\frac{1}{8}$
Liquid Connection Line Size (in.)	$\frac{7}{8} + \frac{7}{8}$	$1\frac{1}{8}$	$\frac{7}{8} + \frac{7}{8}$	$1\frac{1}{8}$	$\frac{7}{8} + \frac{7}{8}$	$1\frac{1}{8}$	$1\frac{1}{8} + \frac{7}{8}$	$1\frac{3}{8}$
CHASSIS DIMENSIONS (ft-in.)								
Length	12-8	12-8	12-8	12-8	16-0	16-0	16-0	16-0
Width	7-5	7-5	7-5	7-5	7-5	7-5	7-5	7-5
Height								
Standard	6-1	6-1	6-1	6-1	6-1	6-1	6-1	6-1
Low Sound	6-7	6-7	6-7	6-7	6-7	6-7	6-7	6-7

LEGEND

MCHX — Microchannel Heat Exchanger

*Nominal heat rejection based on optimum refrigerant charge of R-410A with 15 F subcooling at 30 F temperature difference.

†Condenser fan airflow and power are for units operating at full load and 95 F ambient.

Physical data (cont)

09DP018-040 UNITS — SI

09DP UNIT SIZE	09DPS018	09DPS020	09DPS030	09DPM035		09DPM040	
CAPACITY, 60 Hz (kW)*	72.8	116.4	132.6	152.3		193.4	
CAPACITY, 50 Hz (kW)*	60.7	97.0	110.5	126.9		161.2	
CIRCUIT	Single Circuit	Single Circuit	Single Circuit	Dual Circuit	Single Circuit	Dual Circuit	Single Circuit
OPERATING WEIGHTS (kg)							
Standard	289	326	394	511		546	
With Low Sound Option	298	342	411	527		571	
APPROXIMATE TOTAL REFRIGERANT CHARGE R-410A (kg)	4.4	5.4	5.4	10.9		10.9	
APPROXIMATE TOTAL REFRIGERANT CHARGE R-134a (kg)	5.0	6.3	6.3	12.6		12.6	
NITROGEN SHIPPING CHARGE	0.35 bar						
CONDENSER FANS							
Standard	Propeller Type - Direct Drive						
Quantity	1	2	2	2	2	3	3
Motor kW (per fan)	0.75	0.75	0.75	0.75	0.75	0.75	0.75
r/s	19 (60 Hz), 16 (50 Hz)						
Diameter (mm)	762						
Airflow (l/sec) (60 Hz)†	5333	8731	9864	10 713		15 102	
Airflow (l/sec) (50 Hz)†	4444	7276	8220	8928		12 585	
Total Watts (60 Hz)†	1600	3200	3200	3100		4800	
Total Watts (50 Hz)†	1333	2667	2667	2583		4000	
Low Noise	Plastic Type - Direct Drive						
Quantity	1	2	2	2	2	3	3
Motor kW (per fan)	0.75	0.75	0.75	0.75	0.75	0.75	0.75
r/s	14 (60 Hz), 12 (50 Hz)						
Diameter (mm)	762						
Airflow (l/sec) (60 Hz)†	4932	8260	9156	9911		13 971	
Airflow (l/sec) (50 Hz)†	4110	6883	7630	8259		11 643	
Total Watts (60 Hz)†	1300	2600	2600	2500		3900	
Total Watts (50 Hz)†	1083	2167	2167	2083		3250	
MCHX COIL							
No. Coils per Circuit (Ckt A/Ckt B)		1		1	2	1	2
Circuit % (Ckt A/Ckt B)		100		50/50	100	50/50	100
Total Coils		1		2	2	2	2
sq m	2.5	2.5	3.1	5.0	5.0	5.0	5.0
PIPING							
Pressure Relief	Fusible Plug on liquid lines of both circuits - 99 C						
Hot Gas Connection Line Size (in.)	$1\frac{3}{8}$	$1\frac{3}{8}$	$1\frac{3}{8}$	$1\frac{3}{8} + 1\frac{3}{8}$	$1\frac{5}{8}$	$1\frac{3}{8} + 1\frac{3}{8}$	$1\frac{5}{8}$
Liquid Connection Line Size (in.)	$\frac{5}{8}$	$\frac{5}{8}$	$\frac{5}{8}$	$\frac{5}{8} + \frac{5}{8}$	$\frac{7}{8}$	$\frac{5}{8} + \frac{5}{8}$	$\frac{7}{8}$
CHASSIS DIMENSIONS (mm)							
Length	2242	2242	2242	2340	2340	2340	2340
Width	1025	1025	1025	2242	2242	2242	2242
Height							
Standard	1550	1550	1857	1550	1550	1550	1550
Low Sound	1690	1690	1997	1690	1690	1690	1690

LEGEND

MCHX — Microchannel Heat Exchanger

*Nominal heat rejection based on optimum refrigerant charge of R-410A with 8.3 C subcooling at 16.7 C temperature difference.

†Condenser fan airflow and power are for units operating at full load and 35 C ambient.

09DP050-075 UNITS — SI

09DP UNIT SIZE	09DPM050		09DPM060		09DPM065		09DPM075	
CAPACITY, 60 Hz (kW)*	233.5		264.8		301.8		378.5	
CAPACITY, 50 Hz (kW)*	194.6		220.7		251.5		315.4	
CIRCUIT	Dual Circuit	Single Circuit	Dual Circuit	Single Circuit	Dual Circuit	Single Circuit	Dual Circuit	Single Circuit
OPERATING WEIGHTS (kg)								
Standard	582		691		736		837	
With Low Sound Option	614		724		768		878	
APPROXIMATE TOTAL REFRIGERANT CHARGE R-410A (kg)	10.9		10.9		16.0		20.0	
APPROXIMATE TOTAL REFRIGERANT CHARGE R-134a (kg)	12.6		12.6		18.4		23.1	
NITROGEN SHIPPING CHARGE	0.35 bar							
CONDENSER FANS								
Standard	Propeller Type - Direct Drive							
Quantity	4	4	4	4	4	4	5	5
Motor kW (per fan)	0.75	0.75	0.75	0.75	0.75	0.75	0.75	0.75
r/s	1140 (60 Hz), 950 (50 Hz)							
Diameter (mm)	30							
Airflow (l/sec) (60 Hz)†	18 524		19 727		21 238		26 547	
Airflow (l/sec) (50 Hz)†	15 437		16 439		17 698		22 123	
Total Watts (60 Hz)†	6500		6400		6200		8000	
Total Watts (50 Hz)†	5417		5333		5167		6667	
Low Noise	Plastic Type - Direct Drive							
Quantity	4	4	4	4	4	4	5	5
Motor kW (per fan)	0.75	0.75	0.75	0.75	0.75	0.75	0.75	0.75
r/s	14 (60 Hz), 12 (50 Hz)							
Diameter (mm)	762							
Airflow (l/sec) (60 Hz)†	17 132		18 314		19 633		24 541	
Airflow (l/sec) (50 Hz)†	14 277		15 262		16 361		20 451	
Total Watts (60 Hz)†	5300		5200		5200		6500	
Total Watts (50 Hz)†	4417		4333		4333		5417	
MCHX COIL								
No. Coils per Circuit (Ckt A/Ckt B)	1	2	1	2	2	4	3/2	5
Circuit % (Ckt A/Ckt B)	50/50	100	50/50	100	50/50	100	60/40	100
Total Coils	2	2	2	2	4	4	5	5
sq m	5.0	5.0	6.3	6.3	9.3	9.3	11.6	11.6
PIPING								
Pressure Relief	Fusible Plug on liquid lines of both circuits - 99 C							
Hot Gas Connection Line Size (in.)	$1\frac{3}{8} + 1\frac{3}{8}$	$1\frac{5}{8}$	$1\frac{3}{8} + 1\frac{3}{8}$	$1\frac{5}{8}$	$1\frac{3}{8} + 1\frac{3}{8}$	$1\frac{5}{8}$	$1\frac{5}{8} + 1\frac{3}{8}$	$2\frac{1}{8}$
Liquid Connection Line Size (in.)	$\frac{5}{8} + \frac{5}{8}$	$\frac{7}{8}$	$\frac{5}{8} + \frac{5}{8}$	$\frac{7}{8}$	$\frac{7}{8} + \frac{7}{8}$	$1\frac{1}{8}$	$\frac{7}{8} + \frac{7}{8}$	$1\frac{1}{8}$
CHASSIS DIMENSIONS (mm)								
Length	2340	2340	2340	2340	2816	2816	3838	3838
Width	2242	2242	2242	2242	2242	2242	2242	2242
Height								
Standard	1550	1550	1857	1857	1855	1855	1855	1855
Low Sound	1690	1690	1997	1997	1994	1994	1994	1994

LEGEND

MCHX — Microchannel Heat Exchanger

*Nominal heat rejection based on optimum refrigerant charge of R-410A with 8.3 C subcooling at 16.7 C temperature difference.

†Condenser fan airflow and power are for units operating at full load and 35 C ambient.

Physical data (cont)

09DP085-130 UNITS — SI

09DP UNIT SIZE	09DPM085		09DPM095		09DPM115		09DPM130	
CAPACITY, 60 Hz (kW)*	406.6		455.1		525.5		605.0	
CAPACITY, 50 Hz (kW)*	338.8		379.2		437.9		504.2	
CIRCUIT	Dual Circuit	Single Circuit	Dual Circuit	Single Circuit	Dual Circuit	Single Circuit	Dual Circuit	Single Circuit
OPERATING WEIGHTS (kg)								
Standard	877		877		1110		1149	
With Low Sound Option	926		926		1167		1214	
APPROXIMATE TOTAL REFRIGERANT CHARGE R-410A (kg)	23.9		23.9		27.9		31.9	
APPROXIMATE TOTAL REFRIGERANT CHARGE R-134a (kg)	27.7		27.7		32.3		36.9	
NITROGEN SHIPPING CHARGE	0.35 bar							
CONDENSER FANS								
Standard	Propeller Type - Direct Drive							
Quantity	6	6	6	6	7	7	8	8
Motor kW (per fan)	0.75	0.75	0.75	0.75	0.75	0.75	0.75	0.75
r/s	1140 (60 Hz), 950 (50 Hz)							
Diameter (mm)	30							
Airflow (l/sec) (60 Hz)†	31 856		31 856		37 166		42 475	
Airflow (l/sec) (50 Hz)†	26 547		26 547		30 972		35 396	
Total Watts (60 Hz)†	9600		9600		11 200		12 800	
Total Watts (50 Hz)†	8000		8000		9333		10 667	
Low Noise	Plastic Type - Direct Drive							
Quantity	6	6	6	6	7	7	8	8
Motor kW (per fan)	0.75	0.75	0.75	0.75	0.75	0.75	0.75	0.75
r/s	14 (60 Hz), 12 (50 Hz)							
Diameter (mm)	762							
Airflow (l/sec) (60 Hz)†	29 450		29 450		34 358		39 266	
Airflow (l/sec) (50 Hz)†	24 541		24 541		28 632		32 722	
Total Watts (60 Hz)†	7800		7800		9100		10 400	
Total Watts (50 Hz)†	6500		6500		7583		8667	
MCHX COIL								
No. Coils per Circuit (Ckt A/Ckt B)	3/2	5	3/3	6	4/3	7	5/3	8
Circuit % (Ckt A/Ckt B)	60/40	100	50/50	100	57/43	100	63/37	100
Total Coils	5	5	6	6	7	7	8	8
sq m	11.6	11.6	13.9	13.9	16.2	16.2	18.5	18.5
PIPING								
Pressure Relief	Fusible Plug on liquid lines of both circuits - 99 C							
Hot Gas Connection Line Size (in.)	$1\frac{5}{8} + 1\frac{3}{8}$	$2\frac{1}{8}$	$1\frac{5}{8} + 1\frac{5}{8}$	$2\frac{1}{8}$	$1\frac{5}{8} + 1\frac{5}{8}$	$2\frac{1}{8}$	$1\frac{5}{8} + 1\frac{5}{8}$	$2\frac{1}{8}$
Liquid Connection Line Size (in.)	$\frac{7}{8} + \frac{7}{8}$	$1\frac{1}{8}$	$\frac{7}{8} + \frac{7}{8}$	$1\frac{1}{8}$	$\frac{7}{8} + \frac{7}{8}$	$1\frac{1}{8}$	$1\frac{1}{8} + \frac{7}{8}$	$1\frac{3}{8}$
CHASSIS DIMENSIONS (mm)								
Length	3838	3838	3838	3838	4860	4860	4860	4860
Width	2242	2242	2242	2242	2242	2242	2242	2242
Height								
Standard	1855	1855	1855	1855	1855	1855	1855	1855
Low Sound	1994	1994	1994	1994	1994	1994	1994	1994

LEGEND

MCHX — Microchannel Heat Exchanger

*Nominal heat rejection based on optimum refrigerant charge of R-410A with 8.3 C subcooling at 16.7 C temperature difference.
†Condenser fan airflow and power are for units operating at full load and 35 C ambient.

Options and accessories

ITEM	FACTORY-INSTALLED OPTION	FIELD-INSTALLED ACCESSORY
Condenser Coil/Low Sound Options		
E-Coated MCHX	X	
Low Sound Fan(s)	X	X
Vibration isolation Pads		X
Ambient/Capacity Control/Interrupt Options		
High Short Circuit Current Rating Interrupt	X	
Motormaster V Low Ambient Control	X	X
Electrical Options		
Non-Fused Disconnect	X	
Packaging/Security Options		
Bottom Skid	X	
Bottom Skid, Top Crate, Bag	X	
Security Grilles/Hail Guards	X	X
Wind Baffles		X

LEGEND

E-Coated — Epoxy Coating Applied to Entire Coil Assembly
MCHX — Microchannel Heat Exchanger

NOTES:
1. Std Interrupt - SCCR (short circuit current rating) (5K)
2. High Interrupt - SCCR 460-v and 380/415-v (65K), 208/230-v (65K), 575-v (25K)

Factory-installed options

E-coated Novation® heat exchanger technology microchannel coil (aluminum fin/aluminum tube) condenser is available for optimum durability. Novation heat exchangers with microchannel coil technology are offered coated or uncoated to match coil protection to site conditions. The Carrier Electronic Catalog (E-Cat) can be used to determine whether or not corrosion protection is recommended for particular applications in coastal/marine environments. Following the input of the requested data, the E-Cat program output will advise the appropriate coil to be used. Other factors described in "Selection Guide: Environmental Corrosion Protection, Novation Heat Exchanger with Microchannel Coil Technology" catalog number 04-581042-01 must also be considered to determine if corrosion protection is required.

Low sound AeroAcoustic™ fans provide a specially designed system of fan propellers and stacks that reduce sound by 7 to 10 dbA depending on unit size, without reducing unit performance. The factory-installed fan option is compatible with the Motormaster® V option. Low sound fans are also available as field-installed accessory.

High short circuit current rating interrupt provides a short circuit current rating protection for the unit up to 65,000 A on 460-v, 380/415-v, and 208/230-v units or 25,000 A on 575-v units.

Motormaster® V low-ambient control provides control of outdoor-fan motor operation to maintain head pressure at outdoor ambient temperatures down to –20 F (–29 C) for 50 and 60 Hz units. One factory-installed low ambient temperature kit per unit is required on sizes 018 to 060. Two factory-installed low ambient temperature kits per unit are required on sizes 065 to 130. This option also requires field-installed wind baffles. The Motormaster V low-ambient control is also available as a field-installed accessory.

Non-fused disconnect includes factory-installed non-fused disconnect capability for power and control located at the unit.

Packaging options include bottom skid with standard coil protection and bottom skid, top crate with bag. Standard coil protection is also included on all unit packaging.

Security grilles/hail guards consist of louvered, sheet metal panels which securely fasten to the unit and provide condenser coil protection against hail and physical damage. Security grilles/hail guards are also available as field-installed accessories.

Field-installed accessories

Low sound fans provide a specially designed system of fan propellers and stacks that reduce sound without reducing unit performance. The field-installed fan accessory is compatible with the Motormaster V option. Low sound fans are also available as factory-installed option.

Vibration isolation pads reduce vibration transmission from the unit through the floor and into the conditioned space. The neoprene isolator pads measure $^1/_4$ in. thick (24 in. x 3 in.).

Motormaster® V low-ambient control provides control of outdoor-fan motor operation to maintain head pressure at outdoor ambient temperatures down to –20 F (–29 C) for 50 and 60 Hz units. One field-installed low ambient temperature kit per unit is required on sizes 018 to 060. Two field-installed low ambient temperature kits per unit are required on sizes 065 to 130. This accessory also requires field-installed wind baffles. The Motormaster V low-ambient control is also available as a factory-installed option.

Security grilles/hail guards consist of louvered, sheet metal panels which securely fasten to the unit and provide condenser coil protection against hail and physical damage. Security grilles/hail guards are also available as a factory-installed option.

Wind baffles facilitate operation down to –20 F (–29 C) when used in conjunction with low ambient temperature head pressure control.

09DPS018-030 UNITS

	UNIT	STD. UNIT WT.		CENTER OF GRAVITY		UNIT HEIGHT	POWER ENTRY	PIPING CONNECTIONS	
		LBS.	KG.	X	Y	H	P	HOT GAS	LIQUID
STANDARD	09DPS018	628	285	21.3 [541]	43.5 [1105]	61.0 [1549]	24.9 [632]	1-3/8 [35]	5/8 [16]
	09DPS020	707	321	21.1 [536]					
	09DPS030	857	389	21.3 [541]	43.6 [1107]	73.1 [1857]	36.9 [937]		
LOW SOUND	09DPS018	646	293	21.3 [541]	43.5 [1105]	66.5 [1689]	24.9 [632]		
	09DPS020	743	337	21.1 [536]					
	09DPS030	893	405	21.3 [541]	43.6 [1107]	78.6 [1996]	36.9 [937]		

NOTES:
1. BE SURE TO USE A WET RAG AND REMOVE ALL VALVE CORES BEFORE BRAZING FIELD PIPING.
2. DO NOT CAP OR OTHERWISE OBSTRUCT THE LIQUID LINE TEMPERATURE RELIEF.
3. Ø7/8 [22.4] PILOT HOLE PROVIDED FOR LOCATING FIELD POWER WIRING. ACTUAL HOLE REQUIRED DEPENDS ON FIELD WIRE SIZING.
4. Ø0.437 [11.10] HOLE USED FOR MOUNTING UNIT.
5. UNIT MUST HAVE CLEARANCES AS FOLLOWS:
   TOP - DO NOT RESTRICT.
   COIL END - 42 [1067] FROM SOLID SURFACE.
   PANEL SIDE - 48 [1219] PER NEC.
6. SEE TABLE COLUMN H; DIMENSION FOR STANDARD AND LOW SOUND WITH STACK FAN OPTION.
7. CARRIER DOES NOT RECOMMEND INSTALLATION IN A PIT.
8. UNIT CAN BE HANDLED USING THE FORK TRUCK LIFT POCKETS.
9. THE LIQUID AND HOT GAS PIPING CONNECTIONS END APPROXIMATELY 9 INCHES INSIDE THE UNIT.
10. WEIGHT DOES NOT INCLUDE UNIT REFRIGERANT CHARGE.
11. **DIMENSIONS ARE IN INCHES.** DIMENSIONS IN [ ] ARE IN MILLIMETERS

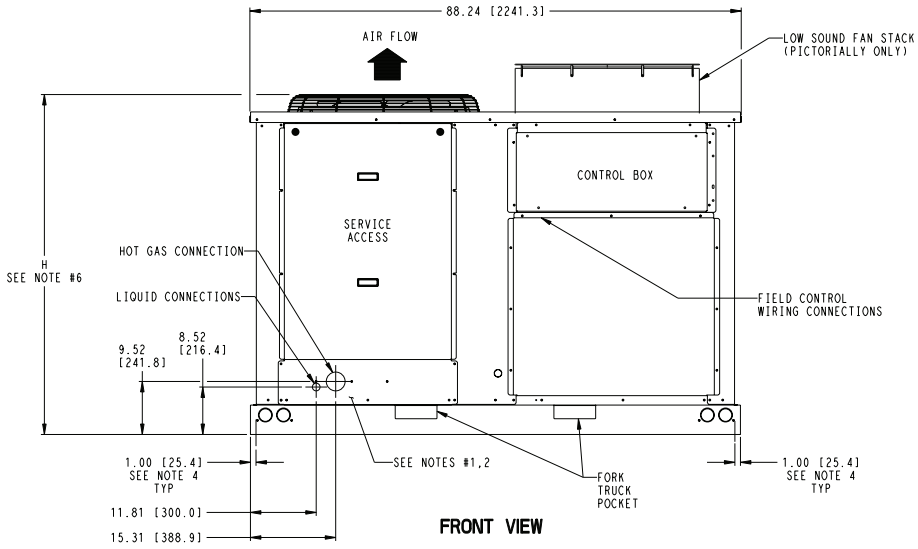

FRONT VIEW

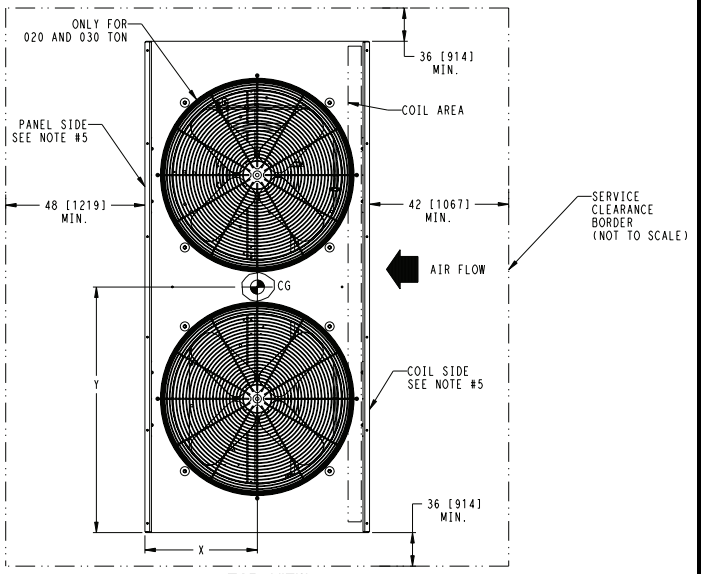

TOP VIEW

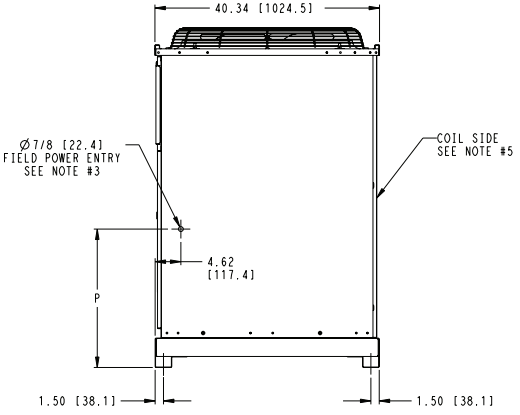

RIGHT SIDE VIEW

09DPM035-060 UNITS

	UNIT	CONFIGURATION	STD.UNIT WT		CENTER OF GRAVITY		UNIT HEIGHT	PIPING CONNECTIONS	
			LBS.	KG.	X	Y	H	HOT GAS	LIQUID
STANDARD	09DPM035	SINGLE	1102	500	44.8 [1138]	44.0 [1118]	61.0 [1549]	1-5/8 [41]	7/8 [22]
		DUAL						1-3/8 [35]	5/8 [16]
	09DPM040	SINGLE	1180	535	43.4 [1102]			1-5/8 [41]	7/8 [22]
		DUAL						1-3/8 [35]	5/8 [16]
	09DPM050	SINGLE	1258	571	44.7 [1135]			1-5/8 [41]	7/8 [22]
		DUAL						1-3/8 [35]	5/8 [16]
	09DPM060	SINGLE	1500	680	44.9 [1140]		73.1 [1857]	1-5/8 [41]	7/8 [22]
		DUAL						1-3/8 [35]	5/8 [16]
LOW SOUND	09DPM035	SINGLE	1138	516	44.8 [1138]		66.5 [1689]	1-5/8 [41]	7/8 [22]
		DUAL						1-3/8 [35]	5/8 [16]
	09DPM040	SINGLE	1234	560	43.4 [1102]			1-5/8 [41]	7/8 [22]
		DUAL						1-3/8 [35]	5/8 [16]
	09DPM050	SINGLE	1330	603	44.7 [1135]			1-5/8 [41]	7/8 [22]
		DUAL						1-3/8 [35]	5/8 [16]
	09DPM060	SINGLE	1572	713	44.9 [1140]		78.6 [1996]	1-5/8 [41]	7/8 [22]
		DUAL						1-3/8 [35]	5/8 [16]

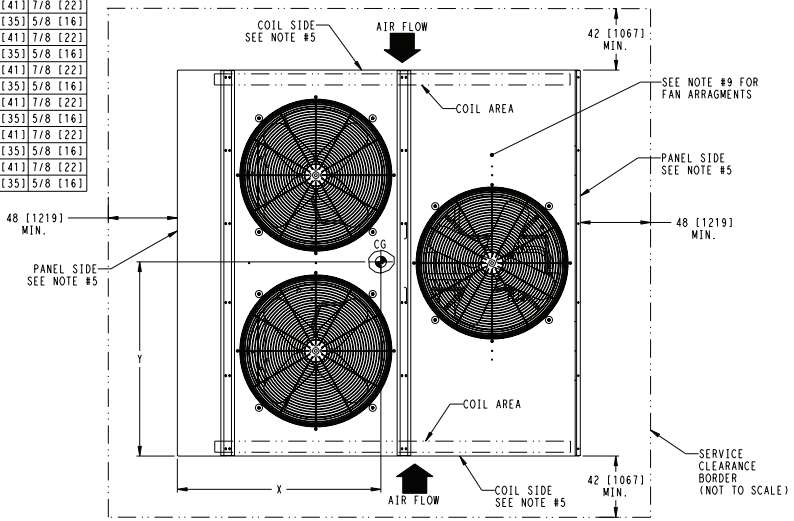

TOP VIEW

NOTES:
1. BE SURE TO USE A WET RAG AND REMOVE ALL VALVE CORES BEFORE BRAZING FIELD PIPING.
2. DO NOT CAP OR OTHERWISE OBSTRUCT THE LIQUID LINE TEMPERATURE RELIEF.
3. Ø7/8 [22.4] PILOT HOLE PROVIDED FOR LOCATING FIELD POWER WIRING. ACTUAL HOLE REQUIRED DEPENDS ON FIELD WIRE SIZING.
4. Ø0.437 [11.10] HOLE USED FOR MOUNTING UNIT.
5. UNIT MUST HAVE CLEARANCES AS FOLLOWS:
   TOP - DO NOT RESTRICT.
   COIL SIDES - 42 [1067] FROM SOLID SURFACE.
   PANEL SIDES - 48 [1219] PER NEC.
6. SEE TABLE COLUMN H; DIMENSION FOR STANDARD AND LOW SOUND WITH STACK FAN OPTION.
7. CARRIER DOES NOT RECOMMEND INSTALLATION IN A PIT.
8. UNIT CAN BE HANDLED USING THE FORK TRUCK LIFT POCKETS.
9. FAN ARRANGEMENTS FOR 035-060 TON UNITS.
   09DP035 - 2 FANS
   09DP040 - 3 FANS
   09DP050-060 - 4 FANS
10. THE LIQUID AND HOT GAS PIPING CONNECTIONS END APPROXIMATELY 12 INCHES INSIDE THE UNIT. FIELD INSTALLED SINGLE CIRCUIT MANIFOLDS END APPROXIMATELY 5 INCHES INSIDE THE UNIT.
11. WEIGHT DOES NOT INCLUDE UNIT REFRIGERANT CHARGE.
12. **DIMENSIONS ARE IN INCHES.** DIMENSIONS IN [ ] ARE IN MILLIMETERS

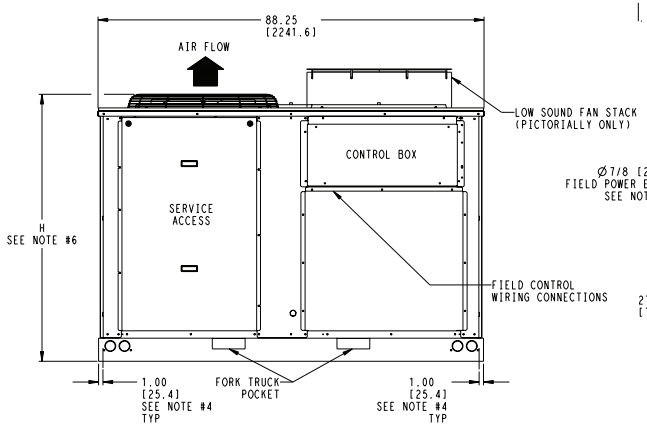

FRONT VIEW

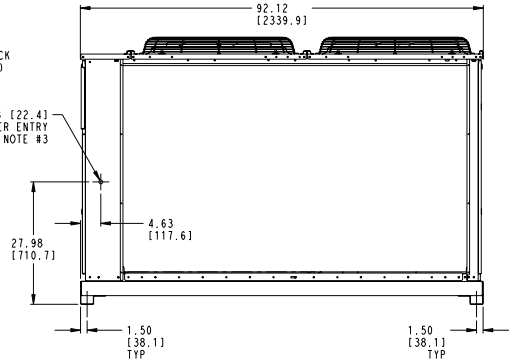

RIGHT SIDE VIEW

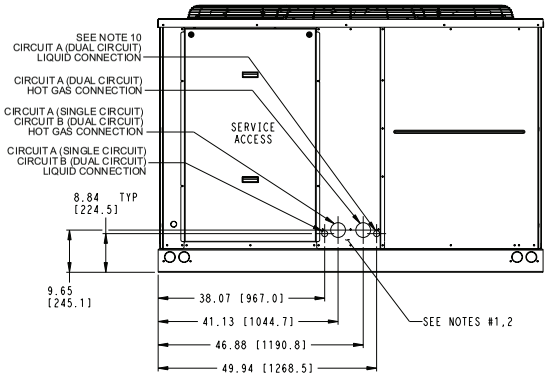

REAR VIEW

Dimensions (cont)

09DPM065 UNIT

	UNIT	CONFIGURATION	STD. UNIT WT.		CENTER OF GRAVITY		UNIT HEIGHT	PIPING CONNECTIONS				PIPING LOCATION
								HOT GAS		LIQUID		
			LBS.	KG.	X	Y	H	CIRCUIT A	CIRCUIT B	CIRCUIT A	CIRCUIT B	R
STANDARD	09DPM065	SINGLE	1587	720	54.5 [1384]	44.0 [1118]	73.0 [1854]	1-5/8 [41]	-	1-1/8 [29]	-	0.83 [21.0]
		DUAL						1-3/8 [35]	1-3/8 [35]	7/8 [22]	7/8 [22]	9.00 [228.6]
LOW SOUND		SINGLE	1659	753			78.5 [1994]	1-5/8 [41]	-	1-1/8 [29]	-	0.83 [21.0]
		DUAL						1-3/8 [35]	1-3/8 [35]	7/8 [22]	7/8 [22]	9.00 [228.6]

NOTES:
1. BE SURE TO USE A WET RAG AND REMOVE ALL VALVE CORES BEFORE BRAZING FIELD PIPING.
2. DO NOT CAP OR OTHERWISE OBSTRUCT THE LIQUID LINE TEMPERATURE RELIEF.
3. Ø7/8 [22.4] PILOT HOLE PROVIDED FOR LOCATING FIELD POWER WIRING. ACTUAL HOLE REQUIRED DEPENDS ON FIELD WIRE SIZING.
4. Ø0.437 [11.10] HOLE USED FOR MOUNTING UNIT.
5. UNIT MUST HAVE CLEARANCES AS FOLLOWS: TOP - DO NOT RESTRICT. COIL, PANEL, AND REAR SIDE'S - 42 [1067] FROM SOLID SURFACE.
6. SEE TABLE COLUMN H; DIMENSION FOR STANDARD AND LOW SOUND WITH STACK FAN OPTION.
7. CARRIER DOES NOT RECOMMEND INSTALLATION IN A PIT.
8. UNIT CAN BE HANDLED USING CRANE, REFER TO SERVICE INSTALLATION INSTRUCTION.
9. WEIGHT DOES NOT INCLUDE UNIT REFRIGERANT CHARGE.
10. **DIMENSIONS ARE IN INCHES.** DIMENSIONS IN [ ] ARE IN MILLIMETERS

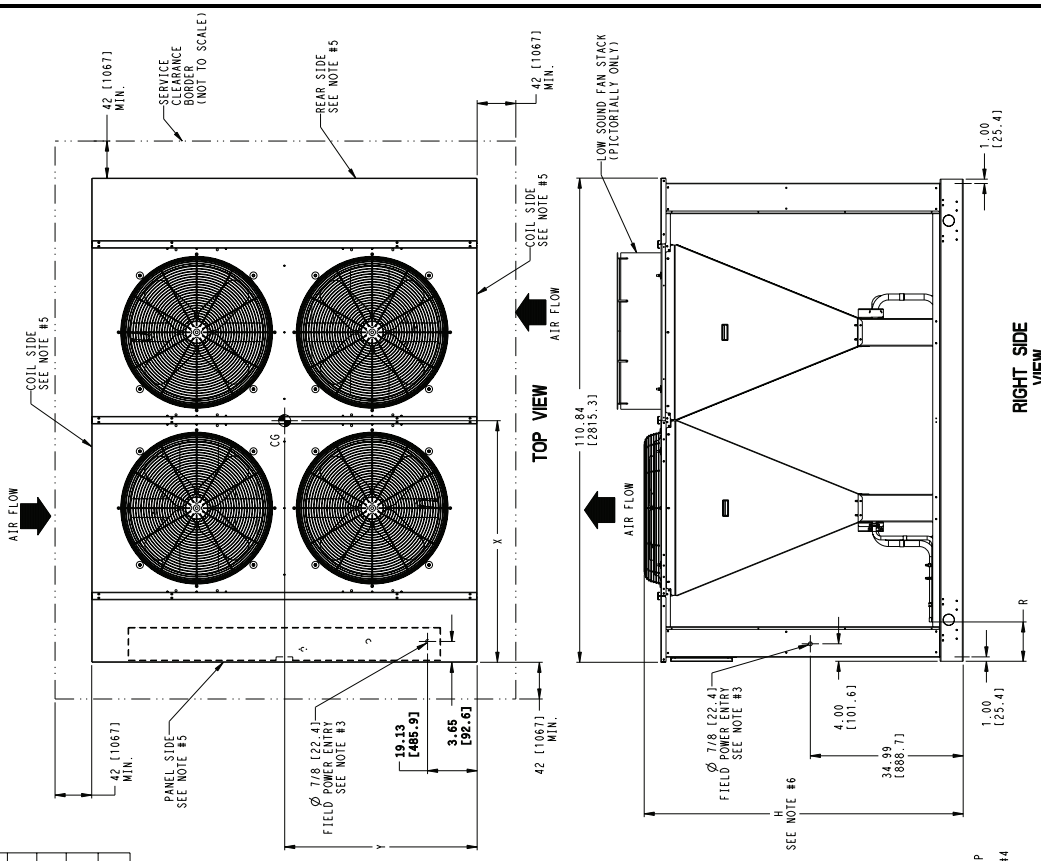

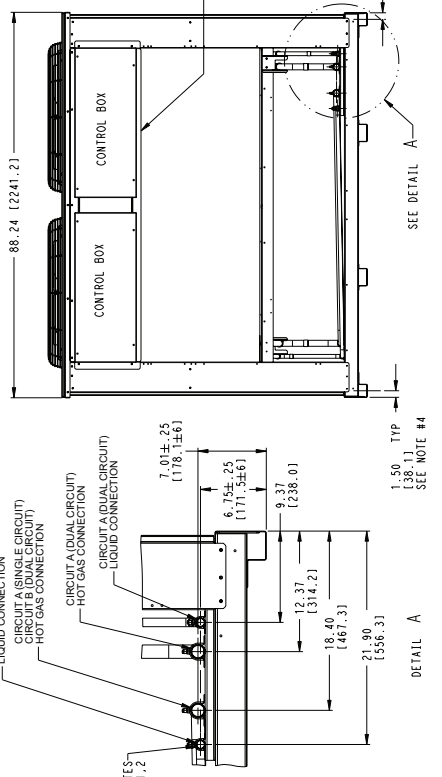

09DPM075-095 UNITS

	UNIT	CONFIGURATION	STD.UNIT WT.		CENTER OF GRAVITY		UNIT HEIGHT	PIPING CONNECTIONS				PIPING LOCATIONS
								HOT GAS		LIQUID		
			LBS.	KG.	X	Y	H	CIRCUIT A	CIRCUIT B	CIRCUIT A	CIRCUIT B	R
STANDARD	09DPM075	SINGLE	1802	817	74.4 [1890]	44.0 [1118]	73.0 [1854]	2-1/8 [54]	-	1-1/8 [29]	-	0.83 [21.0]
		DUAL						1-5/8 [41]	1-3/8 [35]	7/8 [22]	7/8 [22]	9.00 [228.6]
	09DPM085	SINGLE	1880	853				2-1/8 [54]	-	1-1/8 [29]	-	0.83 [21.0]
		DUAL						1-5/8 [41]	1-3/8 [35]	7/8 [22]	7/8 [22]	9.00 [228.6]
	09DPM095	SINGLE						2-1/8 [54]	-	1-1/8 [29]	-	0.95 [24.0]
		DUAL						1-5/8 [41]	1-5/8 [41]	7/8 [22]	7/8 [22]	9.00 [228.6]
LOW SOUND	09DPM075	SINGLE	1892	858			78.5 [1994]	2-1/8 [54]	-	1-1/8 [29]	-	0.83 [21.0]
		DUAL						1-5/8 [41]	1-3/8 [35]	7/8 [22]	7/8 [22]	9.00 [228.6]
	09DPM085	SINGLE	1988	902				2-1/8 [54]	-	1-1/8 [29]	-	0.83 [21.0]
		DUAL						1-5/8 [41]	1-3/8 [35]	7/8 [22]	7/8 [22]	9.00 [228.6]
	09DPM095	SINGLE						2-1/8 [54]	-	1-1/8 [29]	-	0.95 [24.0]
		DUAL						1-5/8 [41]	1-5/8 [41]	7/8 [22]	7/8 [22]	9.00 [228.6]

NOTES:
1. BE SURE TO USE A WET RAG AND REMOVE ALL VALVE CORES BEFORE BRAZING FIELD PIPING.
2. DO NOT CAP OR OTHERWISE OBSTRUCT THE LIQUID LINE TEMPERATURE RELIEF.
3. Ø7/8 [22.4] PILOT HOLE PROVIDED FOR LOCATING FIELD POWER WIRING. ACTUAL HOLE REQUIRED DEPENDS ON FIELD WIRE SIZING.
4. Ø0.437 [11.10] HOLE USED FOR MOUNTING UNIT.
5. UNIT MUST HAVE CLEARANCES AS FOLLOWS: TOP - DO NOT RESTRICT. COIL, PANEL, AND REAR SIDE'S - 42 [1067] FROM SOLID SURFACE.
6. SEE TABLE COLUMN H; DIMENSION FOR STANDARD AND LOW SOUND WITH STACK FAN OPTION.
7. CARRIER DOES NOT RECOMMEND INSTALLATION IN A PIT.
8. UNIT CAN BE HANDLED USING CRANE, REFER TO SERVICE INSTALLATION INSTRUCTION.
9. WEIGHT DOES NOT INCLUDE UNIT REFRIGERANT CHARGE.

DIMENSIONS IN [ ] ARE IN MILLIMETERS

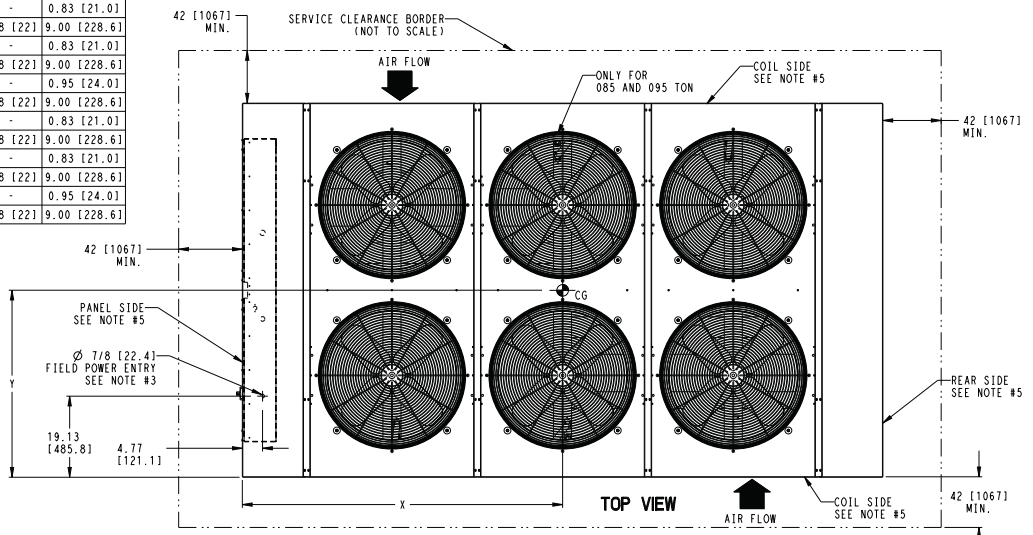

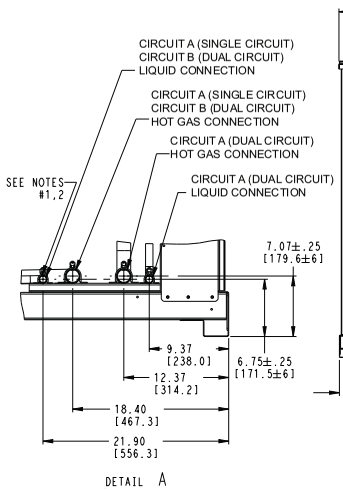

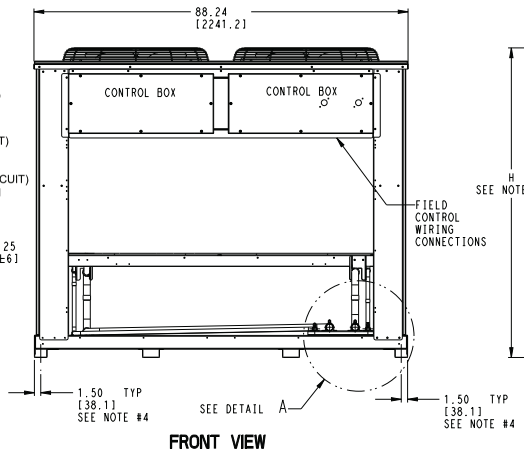

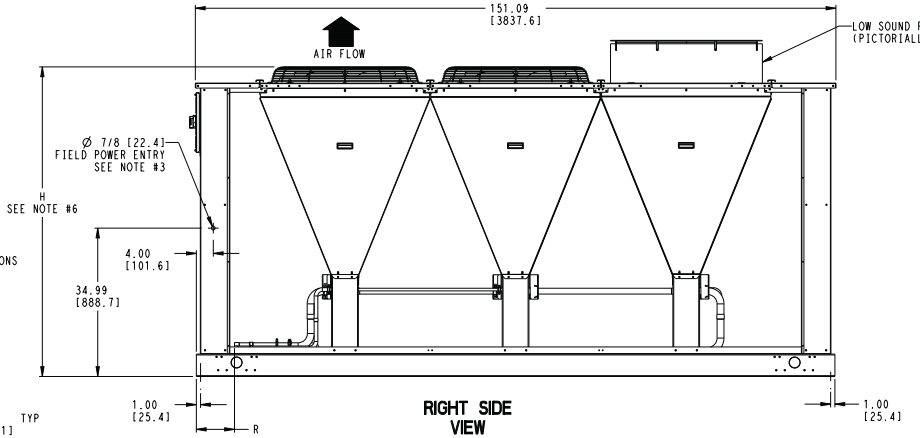

Dimensions (cont)

09DPM115,130 UNITS

	UNIT	CONFIGURATION	STD.UNIT WT.		CENTER OF GRAVITY		UNIT HEIGHT	PIPING CONNECTIONS				PIPING LOCATION
								HOT GAS		LIQUID		
			LBS.	KG.	X	Y	H	CIRCUIT A	CIRCUIT B	CIRCUIT A	CIRCUIT B	R
STANDARD	09DPM115	SINGLE	2385	1082	93.5 [2375]	44.0 [1118]	73.0 [1854]	2-1/8 [54]	-	1-1/8 [29]	-	0.95 [24.0]
								1-5/8 [41]	1-5/8 [41]	7/8 [22]	7/8 [22]	9.00 [228.6]
		DUAL						2-1/8 [54]	-	1-3/8 [35]	-	0.95 [24.0]
								1-5/8 [41]	1-5/8 [41]	1-1/8 [29]	7/8 [22]	9.00 [228.6]
	09DPM130	SINGLE	2463	1117	94.5 [2400]			2-1/8 [54]	-	1-1/8 [29]	-	0.95 [24.0]
								1-5/8 [41]	1-5/8 [41]	7/8 [22]	7/8 [22]	9.00 [228.6]
		DUAL						2-1/8 [54]	-	1-3/8 [35]	-	0.95 [24.0]
								1-5/8 [41]	1-5/8 [41]	1-1/8 [29]	7/8 [22]	9.00 [228.6]
LOW SOUND	09DPM115	SINGLE	2511	1139	93.5 [2375]		78.5 [1994]	2-1/8 [54]	-	1-1/8 [29]	-	0.95 [24.0]
								1-5/8 [41]	1-5/8 [41]	7/8 [22]	7/8 [22]	9.00 [228.6]
		DUAL						2-1/8 [54]	-	1-3/8 [35]	-	0.95 [24.0]
								1-5/8 [41]	1-5/8 [41]	1-1/8 [29]	7/8 [22]	9.00 [228.6]
	09DPM130	SINGLE	2607	1183	94.5 [2400]							
		DUAL										

NOTES:
1. BE SURE TO USE A WET RAG AND REMOVE ALL VALVE CORES BEFORE BRAZING FIELD PIPING.
2. DO NOT CAP OR OTHERWISE OBSTRUCT THE LIQUID LINE TEMPERATURE RELIEF.
3. Ø7/8 [22.4] PILOT HOLE PROVIDED FOR LOCATING FIELD POWER WIRING. ACTUAL HOLE REQUIRED DEPENDS ON FIELD WIRE SIZING.
4. Ø0.437 [11.10] HOLE USED FOR MOUNTING UNIT.
5. UNIT MUST HAVE CLEARANCES AS FOLLOWS:
   TOP - DO NOT RESTRICT.
   COIL, PANEL, AND REAR SIDE'S - 42 [1067] FROM SOLID SURFACE.
6. SEE TABLE COLUMN H: DIMENSION FOR STANDARD AND LOW SOUND WITH STACK FAN OPTION.
7. CARRIER DOES NOT RECOMMEND INSTALLATION IN A PIT.
8. UNIT CAN BE HANDLED USING CRANE, REFER TO SERVICE INSTALLATION INSTRUCTION.
9. WEIGHT DOES NOT INCLUDE UNIT REFRIGERANT CHARGE.

DIMENSIONS IN [ ] ARE IN MILLIMETERS

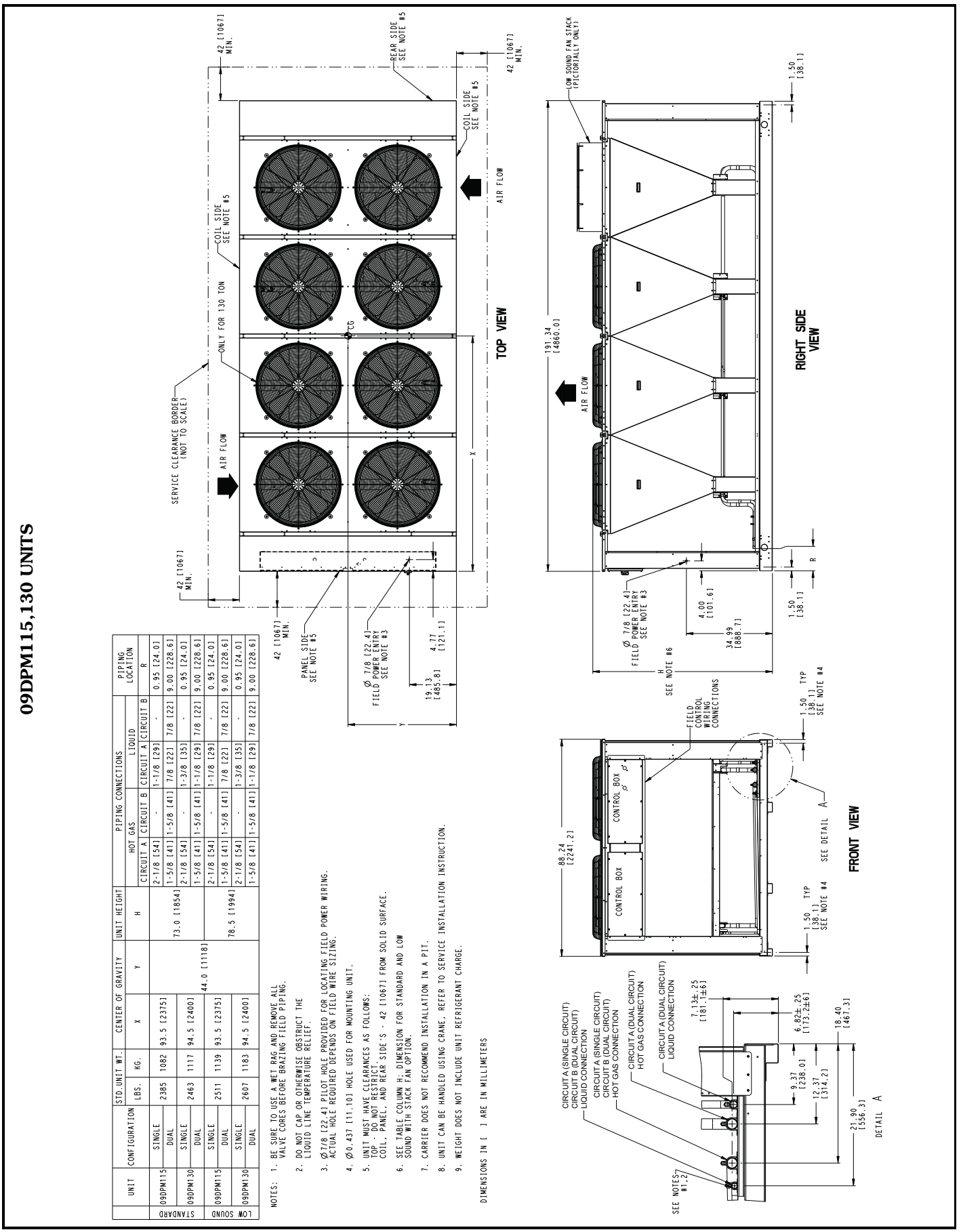

Selection procedure

I Select minimum or maximum charge ratings.

List the refrigerant, total heat rejection (THR), suction and discharge temperatures as determined from compressor data.

II Determine condensing temperature (saturated discharge temperature minus discharge line loss).

III Determine temperature difference (condensing temperature minus entering-air temperature).

IV Enter Condenser Ratings table (minimum or maximum charge as determined in Step 1) at selected refrigerant and established temperature difference (TD).

Read across to total heat rejection equal to or greater than required. Interpolate if necessary. Read unit size.

EXAMPLE: (Maximum Charge)

Given:

R-410A, Maximum Charge
THR (including subcooling). . . . . 59 Tons
Saturated Discharge Temperature. . . . . 124.2 F
Saturated Suction Temperature . . . . . .40 F
Entering-Air Temperature . . . . . .95 F
Discharge Line Loss . . . . . .2 F

Cond Temp = 124.2 F –2 F = 122.2 F

TD = 122.2 F –95 F = 27.2 F

Interpolate in Condenser Ratings table (maximum charge) and obtain capacity of 09DPM050 as 60.7 tons. Select the 09DPM050.

EXAMPLE: (Minimum Charge)

Given:

R-410A, Minimum Charge
THR . . . . . 35 Tons
Saturated Discharge Temperature. . . . . .122 F
Saturated Suction Temperature . . . . . .40 F
Entering-Air Temperature . . . . . .95 F
Discharge Line Loss . . . . . .2 F

Cond Temp = 122 F –2 F = 120 F

TD = 120 F –95 F = 25 F

Enter Condenser Ratings table (minimum charge) and select 09DPM035 at 25 F TD with 38 tons THR.

Performance data

CONDENSER RATINGS USING R-410A, 60 Hz (ENGLISH)

MINIMUM REFRIGERANT CHARGE (5 F Subcooling)

TD* (F)	TOTAL HEAT REJECTION (TONS) 09DP												
	018	020	030	035	040	050	060	065	075	085	095	115	130
10	9.1	14.6	16.2	18.8	23.3	28.9	32.4	37.1	45.7	49.3	55.3	66.1	74.2
15	12.1	19.5	21.8	25.2	31.6	38.7	43.7	49.8	61.9	66.8	74.7	87.5	98.9
20	15.2	24.4	27.6	31.7	39.9	48.8	55.1	62.6	78.1	84.5	94.1	109.1	124.8
25	18.2	29.2	33.1	38.0	48.2	58.5	66.2	75.3	94.2	101.7	113.4	131.1	150.6
30	21.2	34.0	38.7	44.4	56.4	68.3	77.4	88.0	110.4	119.2	132.8	153.2	176.5
35	24.3	38.9	44.4	50.8	64.8	78.3	88.8	100.7	126.5	136.9	152.2	175.3	202.3
40	27.3	43.8	50.1	57.3	73.2	88.3	100.3	113.5	142.7	154.5	171.6	197.6	228.3

MAXIMUM REFRIGERANT CHARGE (15 F Subcooling)

TD* (F)	TOTAL HEAT REJECTION (TONS) 09DP												
	018	020	030	035	040	050	060	065	075	085	095	115	130
20	14.4	22.8	25.8	30.1	37.3	45.4	51.6	58.9	73.3	78.4	88.3	102.6	117.1
25	17.6	28.1	31.8	36.7	46.3	56.1	63.6	72.5	90.7	97.2	109.2	126.4	145.1
30	20.7	33.1	37.7	43.3	54.9	66.4	75.3	85.8	107.6	115.6	129.4	149.4	172.0
35	23.8	38.1	43.5	49.9	63.4	76.7	86.9	98.9	124.1	133.8	149.3	172.1	198.5
40	26.9	43.1	49.2	56.6	72.0	86.8	98.5	111.9	140.7	151.8	169.2	194.8	225.0

CONDENSER RATINGS USING R-134a, 60 Hz (ENGLISH)

MINIMUM REFRIGERANT CHARGE (5 F Subcooling)

TD* (F)	TOTAL HEAT REJECTION (TONS) 09DP												
	018	020	030	035	040	050	060	065	075	085	095	115	130
10	8.0	12.9	14.3	16.6	20.5	25.4	28.5	32.7	40.3	43.4	48.6	58.2	65.3
15	10.7	17.1	19.2	22.2	27.8	34.1	38.4	43.9	54.5	58.8	65.7	77.0	87.1
20	13.4	21.5	24.3	27.9	35.1	42.9	48.5	55.1	68.7	74.4	82.8	96.0	109.8
25	16.0	25.7	29.1	33.4	42.4	51.4	58.2	66.2	82.9	89.5	99.8	115.4	132.6
30	18.7	29.9	34.1	39.1	49.7	60.1	68.1	77.4	97.1	104.9	116.9	134.8	155.3
35	21.3	34.3	39.1	44.7	57.0	68.9	78.1	88.6	111.3	120.4	133.9	154.3	178.1
40	24.0	38.6	44.1	50.4	64.4	77.7	88.2	99.9	125.6	136.0	151.1	173.9	200.9

MAXIMUM REFRIGERANT CHARGE (15 F Subcooling)

TD* (F)	TOTAL HEAT REJECTION (TONS) 09DP												
	018	020	030	035	040	050	060	065	075	085	095	115	130
20	12.3	19.5	22.1	25.7	31.9	38.8	44.1	50.3	62.7	67.0	75.5	87.7	100.2
25	15.0	24.0	27.2	31.4	39.6	48.0	54.4	62.0	77.6	83.1	93.4	108.1	124.0
30	17.7	28.3	32.2	37.1	47.0	56.8	64.4	73.3	92.0	98.8	110.7	127.7	147.1
35	20.4	32.6	37.2	42.7	54.2	65.6	74.3	84.5	106.1	114.4	127.7	147.2	169.7
40	23.0	36.9	42.1	48.4	61.6	74.2	84.2	95.7	120.3	129.8	144.6	166.5	192.4

*TD (Temperature Difference) = Saturated Condensing Temperature (entering) – Entering-Air Temperature.

NOTES:
1. Minimum charge gives higher heat rejection, since entire surface of condenser and subcooling circuit is used for condensing only. Minimum charge ratings, however, do not represent greatest potential system capacity. They are comparable to competitive ratings without subcooling.
2. Use maximum charge when compressor, condenser, and evaporator are selected as a package and the components balanced to secure maximum benefits of 15 F subcooling (for example, in selecting 09DP condensers with Carrier compressor rated at 15 F subcooling). Maximum charge activates the subcooling circuit, resulting in higher system capacity at slightly higher head pressure and corresponding condensing temperature. Liquid refrigerant leaves the system subcooled to a stable condition to allow greater length of refrigerant run or lift. See Application Data section, page 29, for available liquid lift information.
3. Condenser subcooling = Saturated condensing temperature of refrigerant – Actual temperature of refrigerant leaving the coil.

CONDENSER RATINGS USING R-410A, 50 Hz (ENGLISH)

MINIMUM REFRIGERANT CHARGE (5 F Subcooling)

TD* (F)	TOTAL HEAT REJECTION (TONS)												
	09DP												
	018	020	030	035	040	050	060	065	075	085	095	115	130
10	7.6	12.2	13.5	15.7	19.4	24.0	27.0	30.9	38.1	41.1	46.1	55.1	61.8
15	10.1	16.2	18.2	21.0	26.3	32.3	36.4	41.5	51.6	55.7	62.2	72.9	82.4
20	12.7	20.3	23.0	26.4	33.3	40.6	45.9	52.2	65.1	70.4	78.4	90.9	104.0
25	15.1	24.3	27.6	31.7	40.1	48.7	55.1	62.7	78.5	84.7	94.5	109.2	125.5
30	17.7	28.3	32.3	37.0	47.0	56.9	64.5	73.3	92.0	99.3	110.7	127.7	147.1
35	20.2	32.4	37.0	42.4	54.0	65.2	74.0	83.9	105.4	114.1	126.8	146.1	168.6
40	22.8	36.5	41.8	47.7	61.0	73.6	83.6	94.6	118.9	128.7	143.0	164.6	190.2

MAXIMUM REFRIGERANT CHARGE (15 F Subcooling)

TD* (F)	TOTAL HEAT REJECTION (TONS)												
	09DP												
	018	020	030	035	040	050	060	065	075	085	095	115	130
20	12.0	19.0	21.5	25.1	31.1	37.8	43.0	49.1	61.1	65.3	73.6	85.5	97.6
25	14.6	23.4	26.5	30.6	38.6	46.8	53.0	60.5	75.6	81.0	91.0	105.3	120.9
30	17.3	27.6	31.4	36.1	45.8	55.3	62.7	71.5	89.6	96.3	107.9	124.5	143.3
35	19.9	31.8	36.2	41.6	52.9	63.9	72.4	82.4	103.4	111.5	124.4	143.4	165.4
40	22.5	35.9	41.0	47.1	60.0	72.4	82.1	93.2	117.2	126.5	141.0	162.3	187.5

CONDENSER RATINGS USING R-134a, 50 Hz (ENGLISH)

MINIMUM REFRIGERANT CHARGE (5 F Subcooling)

TD* (F)	TOTAL HEAT REJECTION (TONS)												
	09DP												
	018	020	030	035	040	050	060	065	075	085	095	115	130
10	6.7	10.7	11.9	13.8	17.1	21.2	23.8	27.2	33.5	36.2	40.5	48.5	54.4
15	8.9	14.3	16.0	18.5	23.2	28.4	32.0	36.6	45.4	49.0	54.7	64.2	72.6
20	11.1	17.9	20.2	23.2	29.3	35.8	40.4	45.9	57.3	62.0	69.0	80.0	91.5
25	13.3	21.4	24.3	27.9	35.3	42.9	48.5	55.2	69.1	74.6	83.2	96.1	110.5
30	15.6	24.9	28.4	32.6	41.4	50.1	56.8	64.5	80.9	87.4	97.4	112.4	129.5
35	17.8	28.5	32.6	37.3	47.5	57.4	65.1	73.9	92.8	100.4	111.6	128.6	148.4
40	20.0	32.2	36.8	42.0	53.7	64.7	73.5	83.2	104.7	113.3	125.9	144.9	167.4

MAXIMUM REFRIGERANT CHARGE (15 F Subcooling)

TD* (F)	TOTAL HEAT REJECTION (TONS)												
	09DP												
	018	020	030	035	040	050	060	065	075	085	095	115	130
20	10.2	16.2	18.4	21.4	26.6	32.3	36.8	41.9	52.2	55.9	62.9	73.1	83.5
25	12.5	20.0	22.7	26.1	33.0	40.0	45.3	51.7	64.6	69.2	77.8	90.0	103.4
30	14.8	23.6	26.8	30.9	39.1	47.3	53.6	61.1	76.6	82.3	92.2	106.4	122.5
35	17.0	27.2	31.0	35.6	45.2	54.6	61.9	70.4	88.4	95.3	106.4	122.6	141.5
40	19.2	30.7	35.1	40.3	51.3	61.9	70.2	79.7	100.2	108.1	120.5	138.8	160.3

*TD (Temperature Difference) = Saturated Condensing Temperature (entering) – Entering-Air Temperature.

NOTES:
1. Minimum charge gives higher heat rejection, since entire surface of condenser and subcooling circuit is used for condensing only. Minimum charge ratings, however, do not represent greatest potential system capacity. They are comparable to competitive ratings without subcooling.
2. Use maximum charge when compressor, condenser, and evaporator are selected as a package and the components balanced to secure maximum benefits of 15 F subcooling (for example, in selecting 09DP condensers with Carrier compressor rated at 15 F subcooling). Maximum charge activates the subcooling circuit, resulting in higher system capacity at slightly higher head pressure and corresponding condensing temperature. Liquid refrigerant leaves the system subcooled to a stable condition to allow greater length of refrigerant run or lift. See Application Data section, page 29, for available liquid lift information.
3. Condenser subcooling = Saturated condensing temperature of refrigerant – Actual temperature of refrigerant leaving the coil.

Performance data (cont)

CONDENSER RATINGS USING R-410A, 60 Hz (SI)

MINIMUM REFRIGERANT CHARGE (2.8 C Subcooling)

TD* (C)	TOTAL HEAT REJECTION (kW)												
	09DP												
	018	020	030	035	040	050	060	065	075	085	095	115	130
5.6	32.0	51.4	57.0	66.2	81.8	101.5	113.9	130.5	160.8	173.4	194.3	232.4	260.8
8.3	42.7	68.5	76.8	88.7	111.0	136.2	153.6	175.3	217.7	234.9	262.5	307.7	347.9
11.1	53.4	85.8	97.0	111.4	140.4	171.4	193.9	220.1	274.5	297.2	330.8	383.4	438.9
13.9	63.9	102.6	116.3	133.6	169.4	205.5	232.6	264.6	331.2	357.5	398.8	460.9	529.7
16.7	74.6	119.5	136.1	156.2	198.5	240.1	272.2	309.4	388.1	419.0	467.0	538.7	620.7
19.4	85.3	136.9	156.1	178.8	227.8	275.3	312.2	354.1	444.8	481.2	535.1	616.4	711.4
22.2	96.0	154.2	176.3	201.4	257.3	310.4	352.5	399.0	501.8	543.2	603.5	694.6	802.7

MAXIMUM REFRIGERANT CHARGE (8.3 C Subcooling)

TD* (C)	TOTAL HEAT REJECTION (kW)												
	09DP												
	018	020	030	035	040	050	060	065	075	085	095	115	130
11.1	50.5	80.0	90.8	105.7	131.2	159.5	181.6	207.0	257.7	275.6	310.5	360.7	411.9
13.9	61.7	98.6	111.9	129.0	162.9	197.4	223.8	255.1	319.0	341.7	384.1	444.4	510.1
16.7	72.8	116.3	132.4	152.4	193.1	233.5	264.7	301.6	378.2	406.3	455.1	525.3	604.7
19.4	83.8	134.0	152.8	175.6	223.0	269.6	305.5	347.6	436.5	470.3	525.0	605.2	698.1
22.2	94.7	151.7	173.2	198.9	253.2	305.3	346.3	393.4	494.5	533.6	594.7	684.9	791.0

CONDENSER RATINGS USING R-134a, 60 Hz (SI)

MINIMUM REFRIGERANT CHARGE (2.8 C Subcooling)

TD* (C)	TOTAL HEAT REJECTION (kW)												
	09DP												
	018	020	030	035	040	050	060	065	075	085	095	115	130
5.6	28.2	45.2	50.1	58.3	72.0	89.3	100.2	114.9	141.5	152.6	171.0	204.5	229.5
8.3	37.5	60.3	67.6	78.1	97.7	119.9	135.2	154.2	191.5	206.7	231.0	270.8	306.1
11.1	47.0	75.5	85.3	98.0	123.6	150.9	170.6	193.7	241.6	261.6	291.1	337.4	386.2
13.9	56.2	90.3	102.4	117.6	149.1	180.9	204.7	232.9	291.5	314.6	350.9	405.6	466.1
16.7	65.6	105.2	119.8	137.5	174.7	211.3	239.5	272.3	341.5	368.8	411.0	474.1	546.2
19.4	75.0	120.4	137.4	157.3	200.4	242.2	274.8	311.6	391.4	423.5	470.9	542.5	626.1
22.2	84.5	135.7	155.1	177.2	226.4	273.2	310.2	351.1	441.6	478.1	531.1	611.3	706.4

MAXIMUM REFRIGERANT CHARGE (8.3 C Subcooling)

TD* (C)	TOTAL HEAT REJECTION (kW)												
	09DP												
	018	020	030	035	040	050	060	065	075	085	095	115	130
11.1	43.2	68.4	77.6	90.4	112.2	136.4	155.2	177.0	220.3	235.7	265.5	308.4	352.1
13.9	52.8	84.3	95.7	110.3	139.3	168.8	191.3	218.1	272.8	292.1	328.4	380.0	436.1
16.7	62.3	99.4	113.2	130.3	165.1	199.6	226.3	257.9	323.3	347.4	389.1	449.1	517.1
19.4	71.7	114.6	130.6	150.1	190.7	230.5	261.2	297.2	373.2	402.1	448.9	517.4	596.8
22.2	81.0	129.7	148.1	170.1	216.5	261.0	296.1	336.4	422.8	456.2	508.5	585.6	676.3

*TD (Temperature Difference) = Saturated Condensing Temperature (entering) – Entering-Air Temperature.

NOTES:
1. Minimum charge gives higher heat rejection, since entire surface of condenser and subcooling circuit is used for condensing only. Minimum charge ratings, however, do not represent greatest potential system capacity. They are comparable to competitive ratings without subcooling.
2. Use maximum charge when compressor, condenser, and evaporator are selected as a package and the components balanced to secure maximum benefits of 8.3° C subcooling (for example, in selecting 09DP condensers with Carrier compressor rated at 8.3° C subcooling). Maximum charge activates the subcooling circuit, resulting in higher system capacity at slightly higher head pressure and corresponding condensing temperature. Liquid refrigerant leaves the system subcooled to a stable condition to allow greater length of refrigerant run or lift. See Application Data section, page 30, for available liquid lift information.
3. Condenser subcooling = Saturated condensing temperature of refrigerant – Actual temperature of refrigerant leaving the coil.

CONDENSER RATINGS USING R-410A, 50 Hz (SI)

MINIMUM REFRIGERANT CHARGE (2.8 C Subcooling)

TD* (C)	TOTAL HEAT REJECTION (kW)												
	09DP												
	018	020	030	035	040	050	060	065	075	085	095	115	130
5.6	26.7	42.8	47.5	55.2	68.2	84.6	94.9	108.8	134.0	144.5	161.9	193.7	217.4
8.3	35.6	57.1	64.0	73.9	92.5	113.5	128.0	146.0	181.4	195.8	218.7	256.4	289.9
11.1	44.5	71.5	80.8	92.8	117.0	142.8	161.5	183.4	228.8	247.7	275.6	319.5	365.7
13.9	53.2	85.5	96.9	111.4	141.1	171.3	193.8	220.5	276.0	297.9	332.3	384.1	441.4
16.7	62.2	99.6	113.4	130.2	165.4	200.1	226.8	257.9	323.4	349.2	389.1	448.9	517.2
19.4	71.1	114.0	130.1	149.0	189.8	229.4	260.2	295.1	370.7	401.0	445.9	513.7	592.8
22.2	80.0	128.5	146.9	167.8	214.4	258.7	293.8	332.5	418.2	452.7	502.9	578.8	668.9

MAXIMUM REFRIGERANT CHARGE (8.3 C Subcooling)

TD* (C)	TOTAL HEAT REJECTION (kW)												
	09DP												
	018	020	030	035	040	050	060	065	075	085	095	115	130
11.1	42.1	66.7	75.7	88.1	109.3	132.9	151.3	172.5	214.7	229.7	258.8	300.6	343.2
13.9	51.4	82.2	93.3	107.5	135.8	164.5	186.5	212.6	265.8	284.7	320.1	370.3	425.1
16.7	60.7	96.9	110.3	127.0	160.9	194.5	220.6	251.3	315.1	338.6	379.2	437.7	503.9
19.4	69.8	111.7	127.3	146.3	185.9	224.6	254.6	289.6	363.7	391.9	437.5	504.3	581.7
22.2	78.9	126.4	144.3	165.8	211.0	254.4	288.6	327.8	412.1	444.6	495.6	570.7	659.1

CONDENSER RATINGS USING R-134a, 50 Hz (SI)

MINIMUM REFRIGERANT CHARGE (2.8 C Subcooling)

TD* (C)	TOTAL HEAT REJECTION (kW)												
	09DP												
	018	020	030	035	040	050	060	065	075	085	095	115	130
5.6	23.5	37.7	41.8	48.5	60.0	74.4	83.5	95.7	117.9	127.1	142.5	170.4	191.3
8.3	31.3	50.2	56.3	65.1	81.4	99.9	112.6	128.5	159.6	172.3	192.5	225.6	255.1
11.1	39.2	62.9	71.1	81.7	103.0	125.7	142.2	161.4	201.3	218.0	242.6	281.2	321.8
13.9	46.9	75.2	85.3	98.0	124.2	150.7	170.6	194.0	242.9	262.1	292.4	338.0	388.4
16.7	54.7	87.7	99.8	114.6	145.5	176.1	199.6	226.9	284.6	307.3	342.4	395.1	455.2
19.4	62.5	100.4	114.5	131.1	167.0	201.9	229.0	259.7	326.2	352.9	392.4	452.0	521.7
22.2	70.4	113.1	129.3	147.7	188.7	227.6	258.5	292.6	368.0	398.4	442.6	509.4	588.6

MAXIMUM REFRIGERANT CHARGE (8.3 C Subcooling)

TD* (C)	TOTAL HEAT REJECTION (kW)												
	09DP												
	018	020	030	035	040	050	060	065	075	085	095	115	130
11.1	36.0	57.0	64.7	75.3	93.5	113.6	129.4	147.5	183.6	196.4	221.3	257.0	293.4
13.9	44.0	70.3	79.7	91.9	116.1	140.6	159.4	181.7	227.3	243.4	273.7	316.6	363.4
16.7	51.9	82.9	94.3	108.6	137.6	166.3	188.6	214.9	269.4	289.5	324.2	374.2	430.9
19.4	59.7	95.5	108.8	125.1	158.9	192.1	217.7	247.6	311.0	335.1	374.1	431.2	497.3
22.2	67.5	108.1	123.4	141.7	180.4	217.5	246.7	280.3	352.3	380.2	423.7	488.0	563.6

*TD (Temperature Difference) = Saturated Condensing Temperature (entering) – Entering-Air Temperature.

NOTES:
1. Minimum charge gives higher heat rejection, since entire surface of condenser and subcooling circuit is used for condensing only. Minimum charge ratings, however, do not represent greatest potential system capacity. They are comparable to competitive ratings without subcooling.
2. Use maximum charge when compressor, condenser, and evaporator are selected as a package and the components balanced to secure maximum benefits of 8.3° C subcooling (for example, in selecting 09DP condensers with Carrier compressor rated at 8.3° C subcooling). Maximum charge activates the subcooling circuit, resulting in higher system capacity at slightly higher head pressure and corresponding condensing temperature. Liquid refrigerant leaves the system subcooled to a stable condition to allow greater length of refrigerant run or lift. See Application Data section, page 30, for available liquid lift information.
3. Condenser subcooling = Saturated condensing temperature of refrigerant – Actual temperature of refrigerant leaving the coil.

Electrical data

STANDARD FAN

09DP UNIT SIZE	V-Ph-Hz	SUPPLY VOLTAGE		CONDENSER FAN		MCA	MOCP
		Min	Max	TOTAL QTY	FLA		
018	208/230-3-60	187	254	1	6.6	8.3	15
	380-3-60	342	418		3.9	4.9	15
	460-3-60	414	506		3.3	4.1	15
	575-3-60	518	632		2.6	3.3	15
	380/415-3-50	342	440		3.3	4.1	15
020	208/230-3-60	187	254	2	6.6	14.9	20
	380-3-60	342	418		3.9	8.8	15
	460-3-60	414	506		3.3	7.4	15
	575-3-60	518	632		2.6	5.9	15
	380/415-3-50	342	440		3.3	7.4	15
030	208/230-3-60	187	254	2	6.6	14.9	20
	380-3-60	342	418		3.9	8.8	15
	460-3-60	414	506		3.3	7.4	15
	575-3-60	518	632		2.6	5.9	15
	380/415-3-50	342	440		3.3	7.4	15
035	208/230-3-60	187	254	2	6.6	14.9	20
	380-3-60	342	418		3.9	8.8	15
	460-3-60	414	506		3.3	7.4	15
	575-3-60	518	632		2.6	5.9	15
	380/415-3-50	342	440		3.3	7.4	15
040	208/230-3-60	187	254	3	6.6	21.5	25
	380-3-60	342	418		3.9	12.7	15
	460-3-60	414	506		3.3	10.7	15
	575-3-60	518	632		2.6	8.5	15
	380/415-3-50	342	440		3.3	10.7	15
050	208/230-3-60	187	254	4	6.6	28.1	30
	380-3-60	342	418		3.9	16.6	20
	460-3-60	414	506		3.3	14.0	15
	575-3-60	518	632		2.6	11.1	15
	380/415-3-50	342	440		3.3	14.0	15
060	208/230-3-60	187	254	4	6.6	28.1	30
	380-3-60	342	418		3.9	16.6	20
	460-3-60	414	506		3.3	14.0	15
	575-3-60	518	632		2.6	11.1	15
	380/415-3-50	342	440		3.3	14.0	15

LEGEND

AWG — American Wire Gage
FIOP — Factory-Installed Option
FLA — Full Load Amps
MCA — Minimum Circuit Amps, complies with NEC, Article 430-24
MOCP — Maximum Overcurrent Protection (Amps)
NEC — National Electrical Code

1. Units are suitable for use on electrical systems where voltage supplied to the unit terminals is not below or above the listed minimum and maximum limits. Maximum allowable phase imbalance is voltage 2% and amps 10%.
2. All units or modules have single point primary power connection. Main power must be supplied from a field-supplied disconnect.
3. All terminal block units should be capable of handling 14 AWG to 2 AWG.
4. Disconnect units with MOCP of greater than 40 require 8 AWG to 1 AWG.
5. Disconnect units with MOCP less than 40 require 14 AWG to 6 AWG.
6. For all high short circuit capable FIOP units, fuses must be used for overload protection.

STANDARD FAN (cont)

09DP UNIT SIZE	V-Ph-Hz	SUPPLY VOLTAGE		CONDENSER FAN		MCA	MOCP
		Min	Max	TOTAL QTY	FLA		
065	208/230-3-60	187	254	4	6.6	28.1	30
	380-3-60	342	418		3.9	16.6	20
	460-3-60	414	506		3.3	14.0	15
	575-3-60	518	632		2.6	11.1	15
	380/415-3-50	342	440		3.3	14.0	15
075	208/230-3-60	187	254	5	6.6	34.7	40
	380-3-60	342	418		3.9	20.5	25
	460-3-60	414	506		3.3	17.3	20
	575-3-60	518	632		2.6	13.7	15
	380/415-3-50	342	440		3.3	17.3	20
085	208/230-3-60	187	254	6	6.6	41.3	45
	380-3-60	342	418		3.9	24.4	25
	460-3-60	414	506		3.3	20.6	25
	575-3-60	518	632		2.6	16.3	15
	380/415-3-50	342	440		3.3	20.6	25
095	208/230-3-60	187	254	6	6.6	41.3	45
	380-3-60	342	418		3.9	24.4	25
	460-3-60	414	506		3.3	20.6	25
	575-3-60	518	632		2.6	16.3	15
	380/415-3-50	342	440		3.3	20.6	25
115	208/230-3-60	187	254	7	6.6	47.9	50
	380-3-60	342	418		3.9	28.3	30
	460-3-60	414	506		3.3	23.9	25
	575-3-60	518	632		2.6	18.9	20
	380/415-3-50	342	440		3.3	23.9	25
130	208/230-3-60	187	254	8	6.6	54.5	60
	380-3-60	342	418		3.9	32.2	35
	460-3-60	414	506		3.3	27.2	30
	575-3-60	518	632		2.6	21.5	25
	380/415-3-50	342	440		3.3	27.2	30

LEGEND

AWG — American Wire Gage
FIOP — Factory-Installed Option
FLA — Full Load Amps
MCA — Minimum Circuit Amps, complies with NEC, Article 430-24
MOCP — Maximum Overcurrent Protection (Amps)
NEC — National Electrical Code

1. Units are suitable for use on electrical systems where voltage supplied to the unit terminals is not below or above the listed minimum and maximum limits. Maximum allowable phase imbalance is voltage 2% and amps 10%.
2. All units or modules have single point primary power connection. Main power must be supplied from a field-supplied disconnect.
3. All terminal block units should be capable of handling 14 AWG to 2 AWG.
4. Disconnect units with MOCP of greater than 40 require 8 AWG to 1 AWG.
5. Disconnect units with MOCP less than 40 require 14 AWG to 6 AWG.
6. For all high short circuit capable FIOP units, fuses must be used for overload protection.

Electrical data (cont)

LOW SOUND FAN

09DP UNIT SIZE	V-Ph-Hz	SUPPLY VOLTAGE		CONDENSER FAN		MCA	MOCP
		Min	Max	TOTAL QTY	FLA		
018	208/230-3-60	187	254	1	6.0	7.5	15
	380-3-60	342	418		3.9	4.9	15
	460-3-60	414	506		2.9	3.6	15
	575-3-60	518	632		2.4	3.0	15
	380/415-3-50	342	440		2.9	3.6	15
020	208/230-3-60	187	254	2	6.0	13.5	15
	380-3-60	342	418		3.9	8.8	15
	460-3-60	414	506		2.9	6.5	15
	575-3-60	518	632		2.4	5.4	15
	380/415-3-50	342	440		2.9	6.5	15
030	208/230-3-60	187	254	2	6.0	13.5	15
	380-3-60	342	418		3.9	8.8	15
	460-3-60	414	506		2.9	6.5	15
	575-3-60	518	632		2.4	5.4	15
	380/415-3-50	342	440		2.9	6.5	15
035	208/230-3-60	187	254	2	6.0	13.5	15
	380-3-60	342	418		3.9	8.8	15
	460-3-60	414	506		2.9	6.5	15
	575-3-60	518	632		2.4	5.4	15
	380/415-3-50	342	440		2.9	6.5	15
040	208/230-3-60	187	254	3	6.0	19.5	25
	380-3-60	342	418		3.9	12.7	15
	460-3-60	414	506		2.9	9.4	15
	575-3-60	518	632		2.4	7.8	15
	380/415-3-50	342	440		2.9	9.4	15
050	208/230-3-60	187	254	4	6.0	25.5	30
	380-3-60	342	418		3.9	16.6	20
	460-3-60	414	506		2.9	12.3	15
	575-3-60	518	632		2.4	10.2	15
	380/415-3-50	342	440		2.9	12.3	15
060	208/230-3-60	187	254	4	6.0	25.5	30
	380-3-60	342	418		3.9	16.6	20
	460-3-60	414	506		2.9	12.3	15
	575-3-60	518	632		2.4	10.2	15
	380/415-3-50	342	440		2.9	12.3	15

LEGEND

AWG — American Wire Gage
FIOP — Factory-Installed Option
FLA — Full Load Amps
MCA — Minimum Circuit Amps, complies with NEC, Article 430-24
MOCP — Maximum Overcurrent Protection (Amps)
NEC — National Electrical Code

1. Units are suitable for use on electrical systems where voltage supplied to the unit terminals is not below or above the listed minimum and maximum limits. Maximum allowable phase imbalance is voltage 2% and amps 10%.
2. All units or modules have single point primary power connection. Main power must be supplied from a field-supplied disconnect.
3. All terminal block units should be capable of handling 14 AWG to 2 AWG.
4. Disconnect units with MOCP of greater than 40 require 8 AWG to 1 AWG.
5. Disconnect units with MOCP less than 40 require 14 AWG to 6 AWG.
6. For all high short circuit capable FIOP units, fuses must be used for overload protection.

LOW SOUND FAN (cont)

09DP UNIT SIZE	V-Ph-Hz	SUPPLY VOLTAGE		CONDENSER FAN		MCA	MOCP
		Min	Max	TOTAL QTY	FLA		
065	208/230-3-60	187	254	4	6.0	25.5	30
	380-3-60	342	418		3.9	16.6	20
	460-3-60	414	506		2.9	12.3	15
	575-3-60	518	632		2.4	10.2	15
	380/415-3-50	342	440		2.9	12.3	15
075	208/230-3-60	187	254	5	6.0	31.5	35
	380-3-60	342	418		3.9	20.5	25
	460-3-60	414	506		2.9	15.2	20
	575-3-60	518	632		2.4	12.6	15
	380/415-3-50	342	440		2.9	15.2	20
085	208/230-3-60	187	254	6	6.0	37.5	40
	380-3-60	342	418		3.9	24.4	25
	460-3-60	414	506		2.9	18.1	20
	575-3-60	518	632		2.4	15.0	15
	380/415-3-50	342	440		2.9	18.1	20
095	208/230-3-60	187	254	6	6.0	37.5	40
	380-3-60	342	418		3.9	24.4	25
	460-3-60	414	506		2.9	18.1	20
	575-3-60	518	632		2.4	15.0	15
	380/415-3-50	342	440		2.9	18.1	20
115	208/230-3-60	187	254	7	6.0	43.5	45
	380-3-60	342	418		3.9	28.3	30
	460-3-60	414	506		2.9	21.0	25
	575-3-60	518	632		2.4	17.4	20
	380/415-3-50	342	440		2.9	21.0	25
130	208/230-3-60	187	254	8	6.0	49.5	50
	380-3-60	342	418		3.9	32.2	35
	460-3-60	414	506		2.9	23.9	25
	575-3-60	518	632		2.4	19.8	20
	380/415-3-50	342	440		2.9	23.9	25

LEGEND

AWG — American Wire Gage
FIOP — Factory-Installed Option
FLA — Full Load Amps
MCA — Minimum Circuit Amps, complies with NEC, Article 430-24
MOCP — Maximum Overcurrent Protection (Amps)
NEC — National Electrical Code

1. Units are suitable for use on electrical systems where voltage supplied to the unit terminals is not below or above the listed minimum and maximum limits. Maximum allowable phase imbalance is voltage 2% and amps 10%.
2. All units or modules have single point primary power connection. Main power must be supplied from a field-supplied disconnect.
3. All terminal block units should be capable of handling 14 AWG to 2 AWG.
4. Disconnect units with MOCP of greater than 40 require 8 AWG to 1 AWG.
5. Disconnect units with MOCP less than 40 require 14 AWG to 6 AWG.
6. For all high short circuit capable FIOP units, fuses must be used for overload protection.

Typical wiring schematic

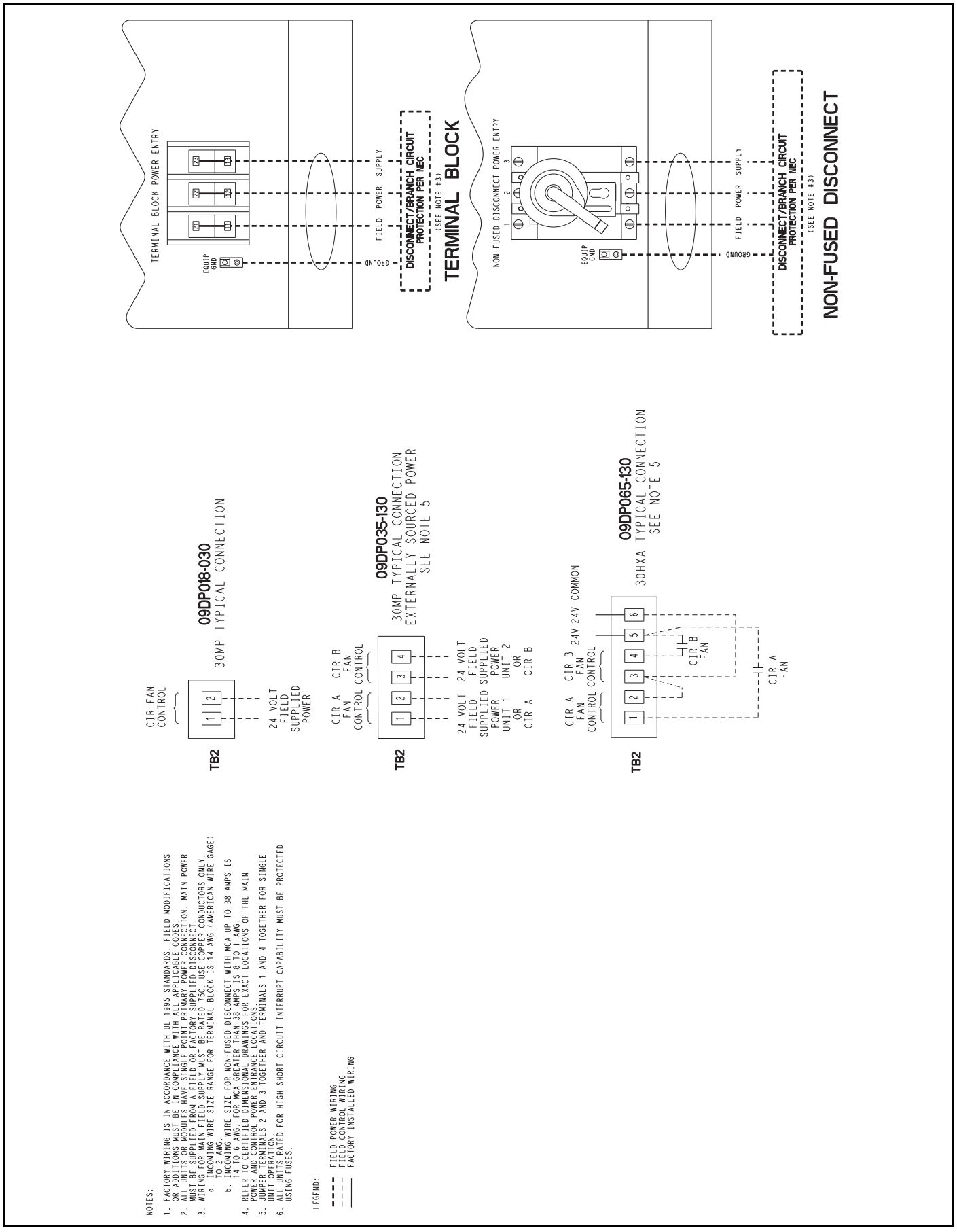

Typical piping and wiring

TYPICAL 30MPA REFRIGERANT PIPING TO 09DP REMOTE CONDENSER
(30MPA030 and 09DPS030 Units Shown)

NOTES:
1. Chiller and condenser must be installed *levelly* to maintain proper compressor oil return.
2. Wiring and piping shown are general points-of-connection guides only and are not intended for a specific installation. Wiring and piping shown are for a quick overview of system and are not in accordance with recognized standards.
3. All wiring must comply with applicable local and national codes.
4. All piping must follow standard piping techniques. Refer to Carrier System Design Manual part 3, Carrier E20-II software Refrigerant Piping program, or appropriate ASHRAE (American Society of Heating, Refrigerating, and Air Conditioning Engineers) handbook for details on proper piping sizes and design.
5. See Physical Data section for approximate refrigerant charge.
6. Hot gas lines should rise above refrigerant level in condenser circuit. Double riser may be required; check unit minimum capacity.
7. Trap should be installed on hot gas lines to prevent condenser oil and refrigerant vapor migration from accumulating in the compressor during off cycle.
8. Pitch all horizontal lines downward in the direction of refrigerant flow.
9. For piping lengths greater than 50 ft, provide support to liquid and gas lines near the connections to the condenser coil.
10. For pressure relief requirements, see latest revision of ASHRAE Standard 15, Safety Code for Mechanical Refrigeration.
11. All 09DP units have factory-installed contactors.

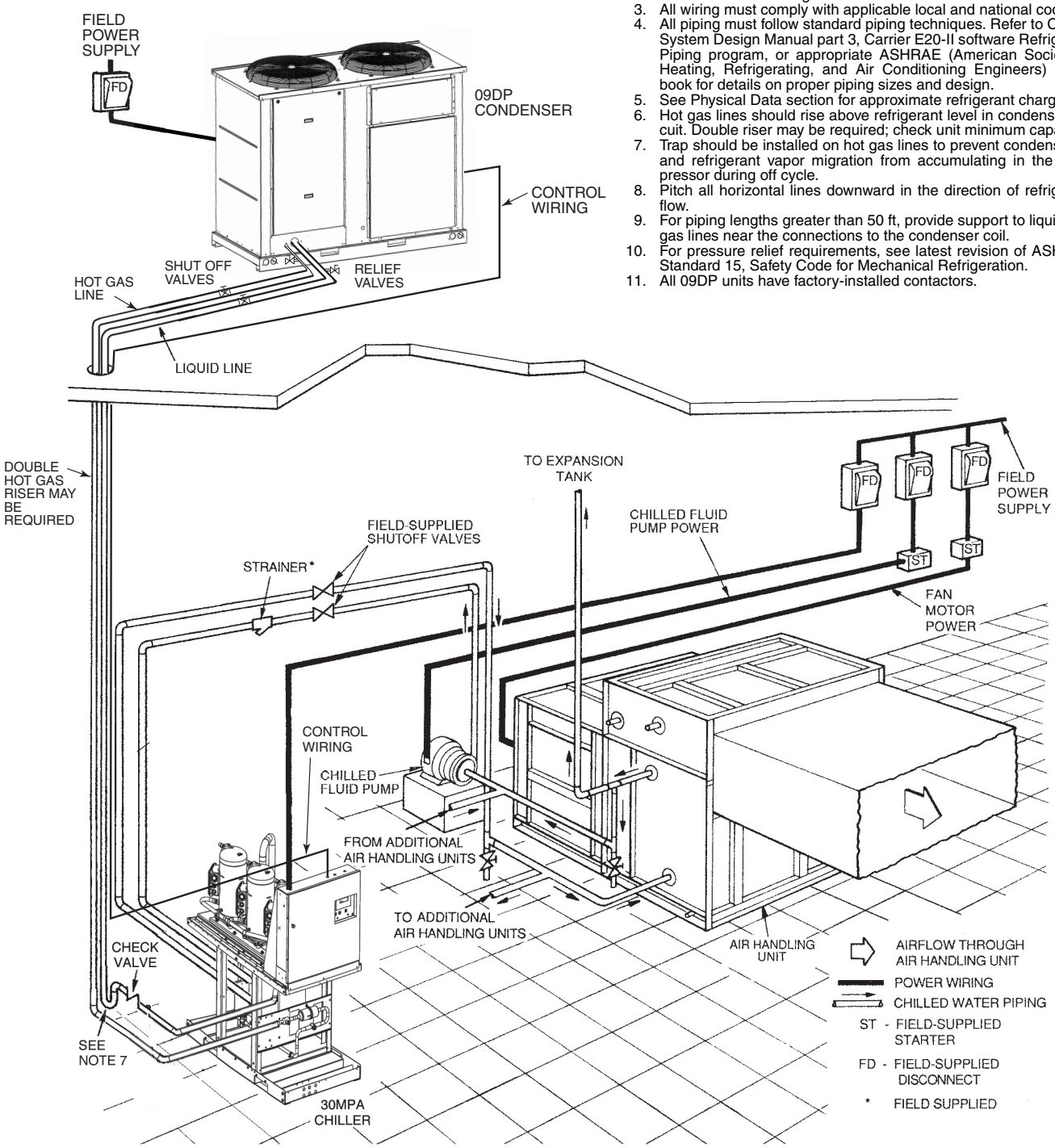

Typical piping and wiring (cont)

TYPICAL 30HXA CONDENSERLESS LIQUID CHILLER REFRIGERANT PIPING TO 09DP REMOTE CONDENSERS (30HXA076 and 09DPM050 Units Shown)

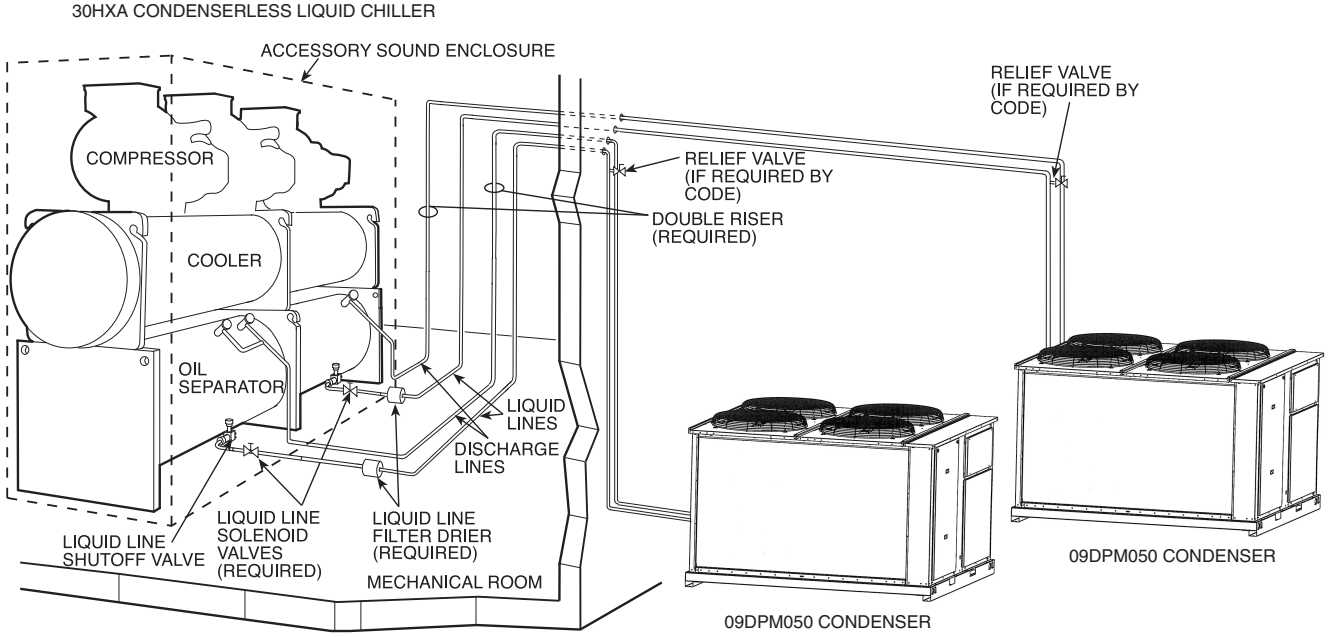

NOTES:
1. Chiller and condenser must be installed *levelly* to maintain proper compressor oil return.
2. Wiring and piping shown are general points-of-connection guides only and are not intended for a specific installation. Wiring and piping shown are for a quick overview of system and are not in accordance with recognized standards.
3. All wiring must comply with applicable local and national codes.
4. All piping must follow standard piping techniques. Refer to Carrier System Design Manual part 3, Carrier E20-II software Refrigerant Piping program, or appropriate ASHRAE (American Society of Heating, Refrigerating, and Air Conditioning Engineers) handbook for details on proper piping sizes and design.
5. See Physical Data section for approximate refrigerant charge.
6. Hot gas lines should rise above refrigerant level in condenser circuit. Double riser may be required; check unit minimum capacity.
7. Trap should be installed on hot gas lines to prevent condenser oil and refrigerant vapor migration from accumulating in the compressor during off cycle.
8. Pitch all horizontal lines downward in the direction of refrigerant flow.
9. For piping lengths greater than 50 ft (15.2 m), provide support to liquid and gas lines near the connections to the condenser coil.
10. For pressure relief requirements, see latest revision of ASHRAE Standard 15, Safety Code for Mechanical Refrigeration.
11. All 09DP units have factory-installed contactors.

Application data

Liquid lift

The amount of liquid lift available before refrigerant flashing occurs depends on the amount of liquid subcooling in the system.

All 09DP condensers have positive subcooling when applied with an optimum charge. With subcooling, it is possible to overcome an appreciable friction drop and/or static head (due to the elevation of the liquid metering device above the condenser).

When 09DP condensers are applied with a minimum charge, minimal subcooling in the condenser is realized; therefore, if subcooling is required it must be obtained by external means such as a liquid suction interchanger.

The average amount of liquid lift available from the 09DP condensers is shown in the accompanying table.

Head pressure control

A drop in entering outdoor-air temperature results in a lower saturated condensing temperature. When the outdoor-air temperature drops below the minimum temperatures listed in the Minimum Outdoor-Air Operating Temperature tables on page 31 and 32, head pressure control is required.

Fan cycling control — Fan cycling control is used primarily during intermediate seasons. One fan is cycled for 09DPS018-030 and 09DPM035 units. Two fans are cycled on 09DPM040 and 065 units. Three fans are cycled on 09DPM050,060 and 075 units. Four fans are cycled on 09DPM085 and 095 units. Five fans are cycled on 09DPM115 units. Six fans are cycled on 09DPM130 units.

Units are shipped standard with head pressure switches for use with R-410A refrigerant for field installation. Use of R-134a or R-22 refrigerants would require field-supplied and installed pressure switches. Carrier 30HXA units are shipped with head pressure switches for use with R-134a refrigerant.

Motormaster® V head pressure control — Head pressure on all 09DPS and 09DPM units may be controlled with the Motormaster V head pressure control. This head pressure control of outdoor-fan motor operation to maintain the proper liquid pressure at low outdoor ambient temperatures down to –20 F (–29 C) for 50 and 60 Hz units. One field or factory-installed low ambient temperature kit per unit is required on sizes 018-060. Two field or factory-installed low ambient temperature kits per unit are required on sizes 065-130. Motormaster controller is compatible with the standard factory-installed 3-phase motors. This control is available as a factory-installed option or field-installed accessory and requires field-installed wind baffles.

Process applications

Process applications are defined as heat rejection loads that are not related to or significantly affected by outside ambient conditions. Process applications tend to have constant heat rejection requirements throughout the year. Consequently, these applications may require switching the set points on standard accessory fan cycle controls. Consult Application Engineering for assistance in designing and selecting process systems.

AVAILABLE LIQUID LIFT (ft)* — ENGLISH

UNIT	REFRIGERANT			
	R-410A		R-134a	
	Temperature Difference (F)†			
	20	30	20	30
09DPS018	75	75	60	45
09DPS020			50	35
09DPS030			45	30
09DPM035			55	40
09DPM040			50	35
09DPM050			50	35
09DPM060			45	30
09DPM065			55	40
09DPM075			50	35
09DPM085			50	35
09DPM095			50	35
09DPM115			50	35
09DPM130			50	35

*Allows 7 psi drop for liquid line accessories with maximum charge.
†Saturated Condensing Temperature (entering) – Entering Air Temperature (dry bulb) °F.

NOTES:
1. Data based on 15 F subcooling.
2. Subcooling = Saturated condensing temperature of refrigerant – Actual temperature of refrigerant leaving the coil.

Application data (cont)

AVAILABLE LIQUID LIFT (m)* — SI

UNIT	REFRIGERANT			
	R-410A		R-134a	
	Temperature Difference (C)†			
	11.1	16.6	11.1	16.6
09DPS018	23	23	18	14
09DPS020			15	11
09DPS030			14	9
09DPM035			17	12
09DPM040			15	11
09DPM050			15	11
09DPM060			14	9
09DPM065			17	12
09DPM075			15	11
09DPM085			15	11
09DPM095			15	11
09DPM115			15	11
09DPM130			15	11

*Allows 48 kPa drop for liquid line accessories with maximum charge.
†Saturated Condensing Temperature (entering) – Entering Air Temperature (dry bulb) °C.

NOTES:
1. Data based on 8.3° C subcooling.
2. Subcooling = Saturated condensing temperature of refrigerant – Actual temperature of refrigerant leaving the coil.

Novation® heat exchanger technology microchannel coil (aluminum fin/aluminum tube) condenser

Coil is available for optimum durability. Novation heat exchangers with microchannel coil technology are offered coated or uncoated to match coil protection to site conditions. The Carrier Electronic Catalog (E-Cat) can be used to determine whether or not corrosion protection is recommended for particular applications in coastal/marine environments. Following the input of the requested data, the E-Cat program output will advise the appropriate coil to be used. Other factors described in "Selection Guide: Environmental Corrosion Protection, Novation Heat Exchanger with Microchannel Coil Technology" catalog number 04-581042-01 must also be considered to determine if corrosion protection is required.

MINIMUM OUTDOOR-AIR OPERATING TEMPERATURE — ENGLISH

UNIT 09DP	TD	MINIMUM AMBIENT (F) WITHOUT MOTORMASTER V CONTROL			
		100% Capacity	75% Capacity	50% Capacity	25% Capacity
018	30	58	62	62	64
	25	63	66	65	66
	20	67	70	68	68
020	30	44	51	54	59
	25	51	58	58	62
	20	58	63	64	66
030	30	27	38	45	54
	25	37	47	51	58
	20	47	55	58	63
035	30	41	48	50	58
	25	47	53	55	60
	20	53	59	60	63
040	30	32	41	45	55
	25	39	47	50	57
	20	46	53	56	61
050	30	20	35	45	52
	25	25	42	50	56
	20	31	50	56	60
060	30	20	30	45	50
	25	25	37	50	54
	20	31	47	56	58
065	30	19	32	41	51
	25	30	42	47	56
	20	42	51	55	62
075	30	24	36	43	53
	25	35	45	50	57
	20	45	54	57	63
085	30	16	29	39	50
	25	28	40	46	55
	20	39	49	54	61
095	30	15	26	37	49
	25	25	38	44	54
	20	37	48	53	61
115	30	15	24	35	48
	25	22	36	43	54
	20	35	46	52	60
130	30	15	25	36	49
	25	23	36	43	54
	20	36	47	52	60

LEGEND

TD — Temperature Difference (F)

NOTES:
1. Based on 80 F condensing temperature at 100% and 75% capacity and a 75 F condensing temperature at 50% and 25% capacity.
2. Units 035 to 130 are based on dual circuit operation. Dual circuit low ambient option should be based on circuit with lowest TD.
3. Operation below minimum ambient temperatures listed will require Motormaster® V control.

Application data (cont)

MINIMUM OUTDOOR-AIR OPERATING TEMPERATURE — SI

UNIT 09DP	TD	MINIMUM AMBIENT (C) WITHOUT MOTORMASTER V CONTROL			
		100% Capacity	75% Capacity	50% Capacity	25% Capacity
018	16.6	14.2	16.7	16.6	17.6
	13.9	16.9	19.1	18.2	18.7
	11.1	19.7	21.3	20.1	20.1
020	16.6	6.4	10.6	12.3	15.1
	13.9	10.5	14.2	14.7	16.8
	11.1	14.5	17.4	17.5	18.8
030	16.6	-2.8	3.3	7.2	12.2
	13.9	2.8	8.3	10.6	14.4
	11.1	8.3	12.8	14.4	17.2
035	16.6	5.0	8.9	10.2	14.2
	13.9	8.2	11.8	12.7	15.5
	11.1	11.6	14.8	15.4	17.1
040	16.6	0.1	4.9	7.2	12.5
	13.9	3.8	8.4	10.2	14.1
	11.1	7.9	11.9	13.4	16.0
050	16.6	-6.7	1.7	7.2	11.1
	13.9	-3.9	5.6	10.0	13.3
	11.1	-0.6	10.0	13.3	15.6
060	16.6	-6.7	-1.1	7.2	10.0
	13.9	-3.9	2.8	10.0	12.2
	11.1	-0.6	8.3	13.3	14.4
065	16.6	-7.3	-0.2	4.7	10.8
	13.9	-1.0	5.5	8.5	13.3
	11.1	5.3	10.5	12.9	16.5
075	16.6	-4.4	2.1	6.3	11.7
	13.9	1.4	7.3	9.8	14.0
	11.1	7.3	12.0	13.9	17.0
085	16.6	-9.0	-1.6	3.8	10.2
	13.9	-2.4	4.4	7.7	12.9
	11.1	4.2	9.6	12.4	16.2
095	16.6	-9.4	-3.1	2.7	9.6
	13.9	-4.0	3.2	6.9	12.4
	11.1	2.9	8.7	11.7	15.9
115	16.6	-9.4	-4.3	1.9	9.1
	13.9	-5.3	2.2	6.2	12.0
	11.1	1.9	7.9	11.2	15.6
130	16.6	-9.4	-3.9	2.1	9.3
	13.9	-5.0	2.5	6.4	12.1
	11.1	2.2	8.1	11.4	15.7

LEGEND

TD — Temperature Difference (C)

NOTES:

1. Based on 26.7 C condensing temperature at 100% and 75% capacity and a 23.9 C condensing temperature at 50% and 25% capacity.
2. Units 035 to 130 are based on dual circuit operation. Dual circuit low ambient option should be based on circuit with lowest TD.
3. Operation below minimum ambient temperatures listed will require Motormaster® V control.

Guide specifications

Commercial Air-Cooled Condensers with Puron® Refrigerant (R-410A) or R-134a Refrigerant, 50/60 Hz

HVAC Guide Specifications

Size Range: **18 to 130 Nominal Tons (63 to 457 Nominal kW)**

Carrier Model Number: **09DPM, 09DPS**

Part 1 — General

1.01 SYSTEM DESCRIPTION

Outdoor-mounted, air-cooled condenser suitable for refrigerant R-410A or R-134a on the ground or rooftop installation. The 09DPS unit shall have one refrigeration circuit and the 09DPM unit shall have two independent refrigeration circuits capable of field conversion to single circuit. Unit shall have air-cooled coils, propeller-type condenser fans, a control box, and shall discharge condenser air vertically upward as shown on certified drawings. Unit shall be used in refrigeration circuit with 30MPA or 30HXA air-cooled condenserless chillers.

1.02 QUALITY ASSURANCE

A. Unit construction shall comply with latest edition of ASHRAE 15 Safety Code, UL 1995, and ASME applicable codes (U.S.A. codes).

B. Unit shall be manufactured in a facility registered to ISO 9001:2000 Manufacturing Quality Standard.

C. Base unit shall be constructed in accordance with UL standards and CSA.

D. Unit cabinet shall be capable of withstanding 500-hour salt-spray exposure per ASTM B117 (scribed specimen).

E. Design pressure shall be 650 psig (4482 kPa).

F. Unit shall be functional checked at the factory.

G. Unit shall be rated using refrigerants R-410A and R-134a. Ratings shall be listed at minimum (5° F subcooling) and maximum (15° F subcooling) refrigerant charge.

1.03 DELIVERY, STORAGE, AND HANDLING

Unit shall be shipped as single package and shall be stored and handled per unit manufacturer's recommendations.

1.04 WARRANTY (FOR INCLUSION BY SPECIFYING ENGINEER)

Part 2 — Products

2.01 EQUIPMENT

A. General:

Factory assembled, single-piece, air-cooled remote condenser. Contained within the unit enclosure shall be all factory wiring, piping, controls, nitrogen holding charge, and special features required prior to field start-up.

B. Unit Cabinet:

1. Cabinet shall be galvanized steel casing with a baked enamel powder or pre-painted finish.
2. Cabinet shall be capable of withstanding 500-hr salt spray test in accordance with ASTM (U.S.A.) B-117 standard.
3. Control box access panels shall be removable for service access.
4. Lifting holes shall be provided to facilitate rigging.

C. Fans:

1. Condenser fans shall be direct-drive propeller type, discharging air vertically upward.
2. All condenser fan motors shall be totally enclosed 3-phase type with permanently lubricated ball bearings, class F insulation and internal, automatic-reset thermal overload protection.
3. Shafts shall have inherent corrosion resistance.
4. Fan blades shall be statically and dynamically balanced.
5. Condenser-fan openings shall be equipped with PVC-coated steel wire safety guards.

D. Condenser Coils:

1. Coil shall be air-cooled microchannel heat exchanger (MCHX) and shall have a series of flat tubes containing a series of multiple, parallel flow microchannels layered between the refrigerant manifolds. Microchannel coils shall consist of a two-pass arrangement. Coil construction shall consist of aluminum alloys for the fins, tubes and manifolds in combination with a corrosion-resistant coating on the tubes.
2. Tubes shall be cleaned, dehydrated, and sealed.
3. Assembled condenser coils shall be leak tested and pressure tested at 650 psig (4482 kPa).

E. Refrigeration Components:

Refrigeration circuit components shall include liquid line temperature relief device and nitrogen holding charge.

F. Controls and Safeties:

Unit controls shall include:

1. Unit shall have a temperature fusible plug for safety on each refrigerant circuit.
2. Self-contained low voltage control circuit.
3. Cycle condenser fans to maintain proper head pressure control.

G. Operating Characteristics:

1. Unit shall be capable of rejecting the required heat at the required cfm and be capable of operating down to moderate ambient temperatures with standard factory supplied fan cycling.
2. Head pressure fan cycling control utilizes temperature switches for 09DP018-035 and 065 units.
3. Head pressure fan cycling control utilizes temperature and pressure switches for 09DP040-060 and 075-130 units.

4. Operation to –20 F (–28.9 C) shall be possible with Motormaster® head pressure control.

H. Electrical Requirements:

1. A dual power supply of the correct voltage shall be required for each series unit. A 3-phase power circuit voltage and a 24 volt single-phase control circuit shall be required.
2. The number of control circuits shall depend on the unit application, whether it is matched with one unit or two units.
3. Power supplies for all units shall enter the control box through factory-punched entrance holes in the control box shelf.
4. Terminal blocks shall be supplied for field wiring connections.
5. Units shall utilize electromechanical fan cycling head pressure controls to control proper head pressure.

I. Special Features:

1. Low Ambient Control:
   a. Control shall regulate fan motor speed in response to the saturated condensing temperature of the unit. The control shall be capable of operating with outdoor temperatures at –20 F (–28.9 C).
   b. Motormaster® low ambient control shall be available as a factory-installed option or field-installed accessory for all units.
2. Optional E-Coated MCHX Condenser Coil:

   E-coated aluminum microchannel coils shall have a flexible epoxy polymer coating uniformly applied to all coil external surface areas without material bridging between fins or louvers. Coating process shall ensure complete coil encapsulation, including all exposed fin edges. E-coat thickness of 0.8 to 1.2 mil with top coat having a uniform dry film thickness from 1.0 to 2.0 mil on all external coil surface areas, including fin edges, shall be provided. E-coated coils shall have superior hardness characteristics of 2H per ASTM D3363-00 and cross-hatch adhesion of 4B-5B per ASTM D3359-02. E-coated products shall have superior impact resistance with no cracking, chipping or peeling per NSF/ANSI 51-2002 Method 10.2 (U.S.A. Standards).
3. Sound Reduction:
   a. Low sound fan for sound reduction is available as a factory-installed option or field-installed accessory for all units.
   b. Low sound fans shall be direct driven, 9-blade, airfoil cross-section type with reinforced polymer construction and shrouded axial fan. Fan shall be statically and dynamically balanced with inherent corrosion resistance.
4. Non-Fused Disconnect:

   A non-fused disconnect is available as a factory-installed option for all units having single point power connection units.
5. High Short Circuit Current Rating (SCCR):

   The optional high SCCR interrupt capability shall allow the unit to tolerate a 65 kA (208/230v, 380v and 460-v units) or 25 kA (575-v units) short circuit current for a brief period of time while protecting downstream components. The high SCCR option shall provide a higher level of protection than the standard unit (option for 60 Hz only). High interrupt shall be available as factory-installed option on all units.
6. Security Grilles/Hail Guards:

   Units shall be supplied with factory-installed or field-installed louvered, sheet metal panels which securely fasten to the unit to provide condenser coil protection against hail and physical damage.
7. Vibration Isolation Pads:

   Neoprene vibration isolation pads (24 in. x 3 in. x $^1/_4$ in.) shall be available for field installation to reduce vibration transmission from the compressor through the floor and into the conditioned space.
8. Wind Baffle Kit:

   Field-installed accessory kit shall provide wind baffles for use with low ambient temperature operation.