Geothermal/Water Source Outdoor Split Heat Pump Product Data

- R-410A Refrigerant
- 2 to 6 Tons Dual Capacity

XL Series T2GE

022-1854-02

Table of Contents

General Introduction 3
Model Nomenclature 4
AHRI Data 5
Design Features 7
Outdoor Split Features. 8
Physical Data 8
Electrical Data. 8
Model Nomenclature 10
Air Handler Compatibility 10
Physical Data - Air Handler 11
Line Set Sizes 11
Model Nomenclature - Coil 12
Refrigerant Coil Compatibility. 12
Reference Calculations 13
Legend and Notes 13
Operating Limits. 14
Pressure Drop. 14
Performance Data 15
Wiring Schematics 25
Microprocessor Control Features and Operation 29
Engineering Guide Specifications 32

T2GE Series

General Introduction

T2GE Series outdoor splits are designed for either indoor or outdoor installations, and are connected to an indoor air handler via refrigerant lines and control wiring. T2GE units utilize the ozone-safe R-410A refrigerant to meet the most stringent EPA requirements now and for many years to come. Easily accessible controls and connections for refrigerant piping and water piping make this unit simple to install in a wide variety of applications. Heavy gauge metal cabinets are coated with durable poly paint for long lasting beauty and protection. Whether the unit is installed indoors or out, the T2GE Series split will provide exceptional performance and comfort for many years. And because there is no outdoor fan like ordinary air conditioners or heat pumps, the T2GE is “whisper quiet”.

T2GE Series units are performance-certified to AHRI ISO 13256-1 standards, are ETL Safety listed, and are ENERGYSTAR® qualified.

As a leader in the industry, we are dedicated to innovation, quality and customer satisfaction. In fact, every unit built is exposed to a wide range of quality control procedures throughout the assembly process and is then subjected to a rigorous battery of computerized run tests to certify that it meets or exceeds performance standards for efficiency and safety, and will perform flawlessly at startup. As further affirmation of our quality standards, each unit carries our exclusive Quality Assurance emblem, signed by the final test technician.

Model Nomenclature

1	2	3	4	5-7	8	9	10	11	12	13	14
T	2	G	E	022	N	N	R	1	0	C	N

Brand
A = Amercian Standard
T = Trane

Compressor Type
2 = Two-Stage Compression

Product Category
G = Geothermal

Product Type
N = Premium Split System Interior Grade
E = Premium Split System Outdoor Grade

Nominal BTU's
Thousands of BTU's

Discharge Configuration
N = None

Return Air Configuration
N = None

Blower Motor Options
N = None

Coax Options
C = Copper
N = Cupronickel

Hot Water Options
0 = No Hot Water, No GeoStart
1 = How Water Generator with factory installed pump, No GeoStart
3 = No Hot Water, GeoStart
4 = How Water Generator with factory installed pump, GeoStart

Voltage/Frequency/Phases
1 = 208-230/60/1

Heating and/or Cooling
R = Heating and Cooling (Reversible)

Note: 026-049 models use FC1-GL and 060-072 models use FC2-GL.

AHRI Data

AHRI/ASHRAE/ISO 13256-1
ENGLISH (IP) UNITS

MODEL	FLOW RATE		WATER LOOP HEAT PUMP				GROUND WATER HEAT PUMP				GROUND LOOP HEAT PUMP			
			COOLING BRINE EWT 86°F		HEATING BRINE EWT 68°F		COOLING EWT 59°F		HEATING EWT 50°F		COOLING BRINE FULL LOAD 77°F PART LOAD 68°F		HEATING BRINE FULL LOAD 32°F PART LOAD 41°F	
	GPM	CFM	CAPACITY BTUH	EER BTUH/W	CAPACITY BTUH	COP	CAPACITY BTUH	EER BTUH/W	CAPACITY BTUH	COP	CAPACITY BTUH	EER BTUH/W	CAPACITY BTUH	COP
026	8	900	25,000	14.6	30,500	5.1	27,800	21.8	25,000	4.6	26,200	17.0	19,500	3.9
	7	700	18,500	16.6	22,000	5.6	21,300	28.4	17,700	4.8	21,000	24.5	16,200	4.4
038	9	1200	34,000	14.6	40,100	5.0	34,300	20.4	33,100	4.5	35,000	17.1	25,700	3.8
	8	800	25,000	16.6	30,000	5.3	25,200	27.0	24,400	4.4	27,000	25.3	22,100	4.2
049	12	1500	45,900	14.0	56,800	4.7	50,500	20.2	46,700	4.4	47,700	16.1	37,000	3.8
	11	1300	35,000	16.2	43,000	5.5	37,300	25.8	33,000	4.7	38,000	22.9	30,500	4.3
064	16	1800	56,300	14.7	67,100	4.6	63,800	19.2	55,800	4.3	59,100	15.5	43,200	3.6
	14	1500	42,900	15.7	49,500	5.1	50,000	24.9	41,000	4.3	47,900	22.2	36,800	3.9
072	18	1800	60,400	13.3	80,600	4.6	67,900	17.8	63,100	3.9	62,700	15.0	50,300	3.4
	16	1600	49,700	14.6	60,200	4.8	57,200	22.8	48,400	4.0	53,800	20.0	42,800	3.8

11/12/10

Cooling capacities based upon 80.6°F DB, 66.2°F WB entering air temperature
Heating capacities based upon 68°F DB, 59°F WB entering air temperature
All ratings based upon operation at the lower voltage of dual voltage rated models.
Refer to the air handler compatibility table for matching air handler.

ENERGY STAR COMPLIANCE TABLE

MODEL	TIER 3	
	GROUND WATER	GROUND LOOP
026	YES	YES
038	YES	YES
049	YES	YES
064	YES	YES
072	NO	YES

11/12/10

Energy Star Rating Criteria
In order for water-source heat pumps to be Energy Star rated they must meet or exceed the minimum efficiency requirements listed below. Please note there are 3 Tier levels that dictate minimum efficiency for water source heat pumps. Only one tier level is active at a given moment.

Tier 3: 1/1/2012 – No Effective End Date Published

	EER	COP
Closed loop water-to-air	17.1	3.6
Open loop water-to-air	21.1	4.1
Closed loop water-to-water	16.1	3.1
Open loop water-to-water	20.1	3.5

ENERGY STAR

AHRI CERTIFIED™ www.ahridirectory.org
Water Source HP
ANSI/AHRI/ASHRAE/ISO 13256-1

The performance standard AHRI/ASHRAE/ISO 13256-1 became effective January 1, 2000 and replaces AHRI Standards 320, 325, and 330. This new standard has three major categories: Water Loop (comparable to ARI 320), Ground Water (ARI 325), and Ground Loop (ARI 330). Although these standards are similar there are some differences:

Unit of Measure: The Cooling COP

The cooling efficiency is measured in EER (US version measured in Btuh per Watt. The Metric version is measured in a cooling COP (Watt per Watt) similar to the traditional COP measurement.

Water Conditions Differences

Entering water temperatures have changed to reflect the centigrade temperature scale. For instance the water loop heating test is performed with 68°F (20°C) water rounded down from the old 70°F (21.1°C).

Air Conditions Differences

Entering air temperatures have also changed (rounded down) to reflect the centigrade temperature scale. For instance the cooling tests are performed with 80.6°F (27°C) dry bulb and 66.2°F (19°C) wet bulb entering air instead of the traditional 80°F (26.7°C) DB and 67°F (19.4°C) WB entering air temperatures. 80.6/66.2 data may be converted to 80/67 using the entering air correction table. This represents a significantly lower relative humidity than the old 80/67 of 50% and will result in lower latent capacities.

Pump Power Correction Calculation

Within each model, only one water flow rate is specified for all three groups and pumping Watts are calculated using the following formula. This additional power is added onto the existing power consumption.

Pump power correction = (gpm x 0.0631) x (Press Drop x 2990) / 300

Where 'gpm' is waterflow in gpm and 'Press Drop' is the pressure drop through the unit heat exchanger at rated water flow in feet of head.

Blower Power Correction Calculation

Blower power is corrected to zero external static pressure using the following equation. The nominal airflow is rated at a specific external static pressure. This effectively reduces the power consumption of the unit and increases cooling capacity but decreases heating capacity. These Watts are significant enough in most cases to increase EER and COPs fairly dramatically over ARI 320, 325, and 330 ratings.

Blower Power Correction = (cfm x 0.472) x (esp x 249) / 300

Where 'cfm' is airflow in cfm and 'esp' is the external static pressure at rated airflow in inches of water gauge.

ISO Capacity and Efficiency Calculations

The following equations illustrate cooling calculations:

- ISO Cooling Capacity = Cooling Capacity (Btuh) + (Blower Power Correction (Watts) x 3.412)
- ISO EER Efficiency (W/W) = ISO Cooling Capacity (Btuh) x 3.412 / [Power Input (Watts) - Blower Power Correction (Watts) + Pump Power Correction (Watt)]

The following equations illustrate heating calculations:

- ISO Heating Capacity = Heating Capacity (Btuh) - (Blower Power Correction (Watts) x 3.412)
- ISO COP Efficiency (W/W) = ISO Heating Capacity (Btuh) x 3.412 / [Power Input (Watts) - Blower Power Correction (Watts) + Pump Power Correction (Watt)]

Comparison of Test Conditions

	ARI 320	ISO/AHRI 13256-1 WLHP	ARI 325	ISO/AHRI 13256-1 GWHP	ARI 330	ISO/AHRI 13256-1 GLHP
Cooling						
Entering Air - DB/WB °F	80/67	80.6/66.2	80/67	80.6/66.2	80/67	80.6/66.2
Entering Water - °F	85	86	50/70	59	77	77
Fluid Flow Rate	*	**	**	**	**	**
Heating						
Entering Air - DB/WB °F	70	68	70	68	70	68
Entering Water - °F	70	68	50/70	50	32	32
Fluid Flow Rate	*	**	**	**	**	**

Note *: Flow rate is set by 10°F rise in standard cooling test
Note **: Flow rate is specified by the manufacturer
Part load entering water conditions not shown.
WLHP = Water Loop Heat Pump; GWHP = Ground Water Heat Pump; GLHP = Ground Loop Heat Pump

Conversions:

Airflow (lps) = CFM x 0.472;
ESP (Pascals) = ESP (in wg) x 249;
Water Flow (lps) = GPM x 0.0631;
Press Drop (Pascals) = Press Drop (ft hd) x 2990

Design Features

Application Flexibility

- Approved for both indoor and outdoor installation.
- Safe, efficient operation in a wide range of liquid temperatures (25° F to 110° F) and flow rates (as low as 1.5 GPM/ton in open loop applications when EWT >50°F).
- Easily accessible loop pump wiring.

Operating Efficiencies

- AHRI 13256-1 rating for heating COPs, cooling EERs and low water flow requirements.
- High-stability expansion valve delivers optimum refrigerant flow over a wide range of conditions.
- Efficient dual-stage scroll compressors provide superior comfort levels.
- Accumulator is on all models for added compressor reliability.
- Oversized coaxial tube water-to-refrigerant heat exchanger operates at low liquid pressure drops.
- Convoluted cupronickel water tube functions efficiently at low flow rates, and provides freeze-damage resistance.

Service Advantages

- Easily removable top and cabinet sides. Removable panel for electrical access provides quick access to electrical components.
- Easily accessible thermal expansion valve.
- GeoLink, swivel-type water connections will connect to GeoLink loop pump(s) / 3/4 fpt for open loop application and factory installed P/T ports.
- High- and low-pressure service ports in refrigerant circuit.
-

Factory Quality

- All units are manufactured on an automated testing assembly line. This assembly line features monitoring and assembly processes that lead the industry such as:
  - Component verification through bar codes.
  - Multiple automatic leak and pressure tests.
  - Performance of a water-based run test measuring both functionality and performance of the unit.
  - Database management of all run test parameters for service analysis.
  - Integrated fail safe system that prevents packaging of a failed unit.
- Heavy-gauge steel cabinets are painted with durable powder coat paint for long lasting beauty and service.
- All refrigerant brazing is performed in a nitrogen atmosphere.
- All units are deep evacuated to less than 150 microns prior to refrigerant charging.
- All joints are helium leak-tested to insure an annual leak rate of less than 1/4 ounce.
- Refrigerant suction lines are fully insulated to reduce condensation problems in low temperature operation.
- Freeze detection switch to automatically turn on loop pump(s) during off cycle when loop temperature is below 20°F.
- Insulated cabinet using 1/2-inch coated glass fiber.
- Safety features include high- and low-pressure refrigerant controls to protect the compressor.
- Coaxial heat exchanger is coated for increased efficiency.

Options and Accessories

- Electronic auto-changeover thermostat with 3-stage heat/2-stage cool and indicator LEDs.
- Closed loop flow center and loop circulating kits.
- Additional accessory relay.
- Bramec III, 6x6 modular mounting pad.
- Decorative rock cover for outdoor use. Available in brown granite, gray granite, salt and pepper, charcoal basalt.
- GeoStart compressor soft starter
- GRAC encased and uncased coil assemblies

Outdoor Split Features

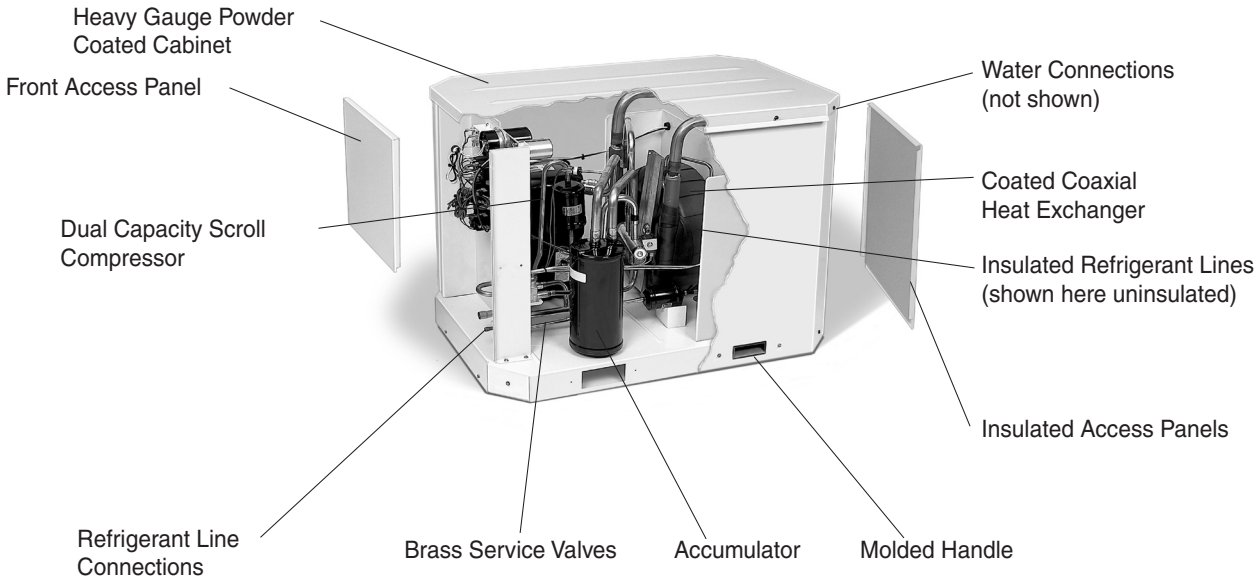

Physical Data

MODEL	026	038	049	064	072
Compressor (1 each)	Dual Capacity Scroll				
Factory Charge R-410A, oz [kg]	52 [1.47]	56 [1.59]	90 [2.55]	92 [2.61]	104 [2.95]
Coax and Water Piping					
Water Connections Size - Swivel- in [mm]	Swivel Connectors				
Brass Service Valve - Liquid Line - in [mm]	3/8 [9.525]			1/2 [12.7]	
Brass Service Valve - Suction Line - in [mm]	5/8 [15.875]	3/4 [19.05]		7/8 [22.225]	
Coax and Piping Water Volume - gal [l]	0.7 [2.6]	1.3 [4.9]	1.6 [6.1]	1.6 [6.1]	1.6 [6.1]
Weight - Operating, lb [kg]	189 [86]	236 [107]	250 [113]	271 [123]	290 [132]
Weight - Packaged, lb [kg]	209 [95]	256 [116]	270 [122]	291 [132]	310 [141]

10/29/08

All units have TXV expansion devices, and 1/2 in. [12.2 mm] and 3/4 in. [19.1 mm] electrical knockouts.
Brass service valves are sweat type valves.

Electrical Data

MODEL	RATED VOLTAGE	VOLTAGE MIN/MAX	COMPRESSOR				EXT LOOP FLA	TOTAL UNIT FLA	MIN CIRC AMP	MAX FUSE/ HACR
			MCC	RLA	LRA	LRA*				
026	208-230/60/1	197/253	16.0	10.2	52.0	18.0	5.4	15.6	17.0	25
038	208-230/60/1	197/253	26.0	16.6	82.0	29.0	5.4	22.0	23.4	40
049	208-230/60/1	197/253	33.0	21.1	96.0	34.0	5.4	26.5	27.9	50
064	208-230/60/1	197/253	40.0	25.6	118.0	41.0	5.4	31.0	32.4	60
072	208-230/60/1	197/253	42.5	27.2	150.0	53.0	5.4	32.6	34.0	60

01/17/11

Rated voltage of 208-230/60/1.
HACR circuit breaker in USA only.
Min/Max voltage of 197/253.
All fuses Class RK-5
* With optional GeoStart

Dimensional Data

Cabinet Dimensions and Refrigerant Piping Connections

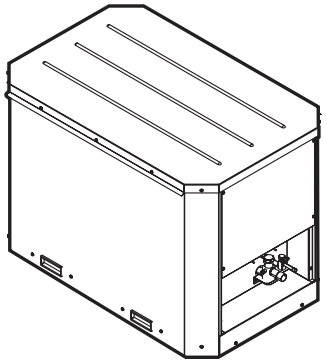

Top View

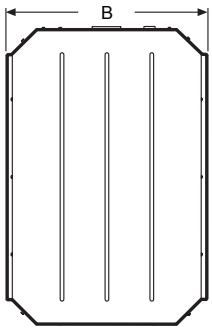

Front View

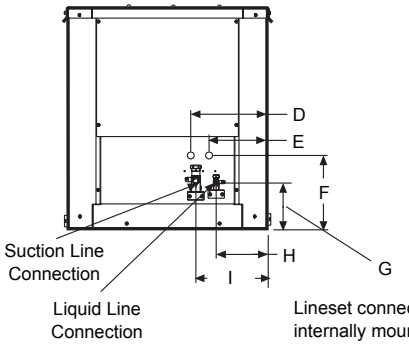

Rear View

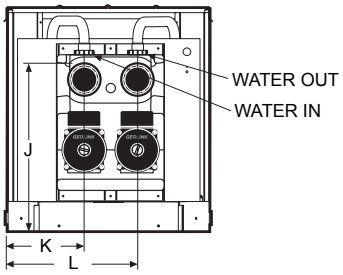

Side View

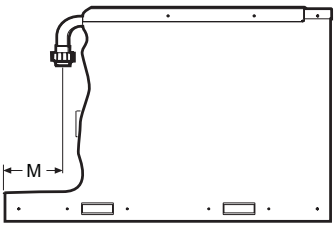

Side View

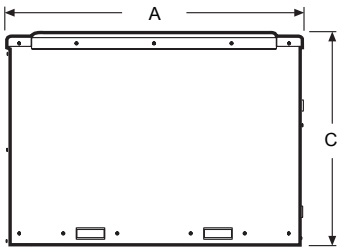

MODEL		A	B	C	D	E	F	G	H	I	J	K	L	M
026 THRU 072	IN	36.0	23.9	26.7	9.3	7.1	9.0	5.6	8.2	10.7	18.9	8.7	14.8	7.0
	[CM]	[91.4]	[60.7]	[67.8]	[23.7]	[18.0]	[22.8]	[14.2]	[20.9]	[27.2]	[48.0]	[22.1]	[37.6]	[17.8]

Notes: Refer to Physical Dimensions and Piping Connections drawings
Inches [cm]

Model Nomenclature

Position	1	2-3	4-5	6	7-8	9	10	11	12	13	14
	A	GA	22	A	00	0	1	1	M	S	A

Brand (either A or T)
A = Amercian Standard
T = Trane

Product Categoty
GA = Four Position Air Handler

Unit Capacity

Refrigerant Models	Nom. CFM
22 = 022 Mbthu	800
26 = 026 Mbtuh	925
30 = 030 Mbtuh	980
36 = 036 Mbtuh	1225
42 = 042 Mbtuh	1425
48 = 048 Mbtuh	1625
60 = 060 Mbtuh	1760

Vintage
A = Current

Series
A = Current

System Control Type
S = Standard 24 VAC

Application
M = Multi-Poise
042-060 Downflow Application Only: Requires Kit NAHBC

Air Coil Type
R = Refrigerant
H = Hydronic

Motor/Blower
1 = ECM Available only

Disconnect
0 = No Breaker Installed (5kW and 10kW heaters)
1 = Breaker Installed (15kW and 20kW Heaters)

Electric Heat
00 = No Electric Heat
05 = 5kW (Available on 22-26 only)
10 = 10kW (Available on 30-60 only)
15 = 15kW (Available on 42-60 only)
20 = 20kW (Available on 60 only)

Air Handler Compatibility

Air Handler Sizing Selection

The XL Series Air Handlers are designed for R-410A refrigerant and should be matched with the XL Series Split compressor section according to the table below.

AIR HANDLER	INDOOR SPLIT MODEL (SINGLE)	INDOOR SPLIT MODEL (DUAL CAPACITY)	OUTDOOR SPLIT MODEL (DUAL CAPACITY)	AIRFLOW (CFM)	ELECTRIC HEAT (KW)
022	T1GN022	-		800	5
026	-	T2GN026	T2GE026	925	5
030	T1GN030	-	-	980	5, 10
036	T1GN036	-	-	1225	5, 10
036	-	T2GN038	T2GE038	1225	5, 10
042	T1GN042	-	-	1425	10, 15
048	T1GN048	-	-	1625	10, 15
048	-	T2GN049	T2GE049	1625	10, 15
060	T1GN060	-	-	1760	10, 15, 20
060	-	T2GN064	T2GE064	1760	10, 15, 20
060	T1GN070	-	-	1760	10, 15, 20
060	-	T2GN072	T2GE072	1760	10, 15, 20

02/12

Physical Data - Air Handler

Air Handler Model Number (Refrigerant)		GA022	GA026	GA030	GA036	GA042	GA048	GA060
Evaporator Coil	Air Coil Total Face Area, ft2 [m2]	5.83 [0.54]						
	Tube outside diameter - in. [mm]	3/8 [9.52]						
	Number of rows	2				3		
	Fins per inch	12						
	Suction line connection - in. [mm] sweat	5/8 [15.87]				7/8 [22.22]		
	Liquid line connection - in. [mm] sweat	3/8 [9.52]						
Refrigerant		R-410a						
Nominal cooling capacity - tons [kW]		1.8 [6.44]	2.1 [7.59]	2.5 [8.79]	3 [10.55]	3.5 [12.30]	4 [14.06]	5 [17.58]
Condensate drain connection - (FPT) in. [mm]		3/4 [19.05]						
Blower Wheel Size (Dia x W), in. [mm]		11 x 10 [279 x 254]						
Blower motor type/speeds		ECM variable speed						
Blower motor output - hp [W]		1/2 [373]				1 [746]		
Filter Standard - 1" [51mm] MERV3 disposable, in. [mm]		20 x 24 [508 x 635]						
Electrical characteristics (60hz)		208/230 - 1ph						
Shipping weight - lbs. [kg]		215 [97.52]				220 [99.79]		
Operating weight - lbs. [kg]		195 [88.45]				200 [90.71]		

1/11/08

Air Handler Model Number (Hydronic)		GA022 - GA060			
Hydronic Coil	Air Coil Total Face Area, ft2 [m2]	6.94 [0.64]			
	Tube outside diameter - in. [mm]	3/8 [9.52]			
	Number of rows	3			
	Fins per inch	13			
	Water In connection - in. [mm] sweat	7/8 [22.22]			
	Water Out connection - in. [mm] sweat	7/8 [22.22]			
Nominal cooling capacity - tons [kW]		2.1 [7.59]	3 [10.55]	4 [14.06]	5 [17.58]
Condensate drain connection - (FPT) in. [mm]		3/4 [19.05]			
Blower Wheel Size (Dia x W), in. [mm]		11 x 10 [279 x 254]			
Blower motor type/speeds		ECM variable speed			
Blower motor output - hp [W]		1/2 [373]		1 [746]	
Filter Standard - 1" [51mm] MERV3 disposable, in. [mm]		20 x 24 [508 x 635]			
Electrical characteristics (60hz)		208/230 - 1ph			
Shipping weight - lbs. [kg]		220 [99.79]			
Operating weight - lbs. [kg]		200 [90.71]			

Note: Water connection dimensions are O.D.

3/11/08

Line Set Sizes

UNIT SIZE	AIR HANDLER	20 FEET		40 FEET		60 FEET		FACTORY CHARGE (OZ.)	*CHARGE AMOUNT WITH *AM7 AIR HANDLER (OZ.)
		SUCTION	LIQUID	SUCTION	LIQUID	SUCTION	LIQUID		
026	GA026	5/8" OD	3/8" OD	3/4" OD	3/8" OD	3/4" OD	1/2" OD	52	74
038	GA036	3/4" OD	3/8" OD	3/4" OD	3/8" OD	3/4" OD	1/2" OD	56	86
049	GA048	3/4" OD	3/8" OD	7/8" OD	3/8" OD	7/8" OD	1/2" OD	90	115
064	GA060	7/8" OD	1/2" OD	7/8" OD	1/2" OD	1-1/8" OD	1/2" OD	92	112
072	GA060	7/8" OD	1/2" OD	7/8" OD	1/2" OD	1-1/8" OD	1/2" OD	104	132

4/16/10

NOTES: * The "Charge Amount with *AM7 Air Handler" column is based on the charge amount for an *AM7 Air Handler + Compressor Section Split.
Additional charge will have to be added accordingly for line set length.
After charge is added, adjustments can be made to get appropriate subcooling and superheat.
Additional charge for R-410A is 0.50 oz. per ft. for 3/8 in. and 1.0 oz. per ft. for 1/2 in. tube.

Model Nomenclature - Coil

1	2	3	4	5	6	7-9	10	11	12	13	14
A	G	C	X	C	R	026	A	M	A	A	X

Brand (either A or T)
A = Amercian Standard
T = Trane

Product Categoty
G = Geothermal

Product Type
C = Split System Dual Fuel Coil

Coil Design
X = Direct Expansion
Evaporator Coil TXV Included

Coil Cabinet
C = Cabinet Encased
U = Uncased

Model Type
R = Refrigerant Coil
H = Hydronic Coil

Minor Design Change - not orderable

Vintage
A = Current

Series
A = Current

Airflow Configuration
Cased = Multi-poise
Uncased = Multi-poise

Cloil Width
A = 20.8" / 20.0"

Nominal Coil Capacity

Refrigerant Models	Recommended Airflow (CFM)
026 Mbtuh	800-980
036 Mbtuh	1225
048 Mbtuh	1425-1625
060 Mbtuh	1760
Hydronic Models	
060 Mbtuh	1760

Refrigerant Coil Compatibility

ENCASED/UNCASED COIL	INDOOR SPLIT MODEL (SINGLE)	INDOOR SPLIT MODEL (DUAL CAPACITY)	OUTDOOR SPLIT MODEL (DUAL CAPACITY)	RECOMMENDED AIRFLOW (CFM)
GCX026*	1GN022	-		800
GCX026*	-	2GN026	2GE026	925
GCX026*	1GN030	-	-	980
GCX036*	1GN036	-	-	1225
GCX036*	-	2GN038	2GE038	1225
GCX048*	1GN042	-	-	1425
GCX048*	1GN048	-	-	1625
GCX048*	-	2GN049	2GE049	1625
GCX060*	1GN060	-	-	1760
GCX060*	-	2GN064	2GE064	1760
GCX060*	1GN070	-	-	1760
GCX060*	-	2GN072	2GE072	1760

7/14/08

Reference Calculations

Heating Calculations:	Cooling Calculations:
$LWT = EWT - \frac{HE}{GPM \times 500}$	$LWT = EWT + \frac{HR}{GPM \times 500}$
$LAT = EAT + \frac{HC}{CFM \times 1.08}$	$LAT\ (DB) = EAT\ (DB) - \frac{SC}{CFM \times 1.08}$
$TH = HC + HW$	$LC = TC - SC$
	$S/T = \frac{SC}{TC}$

Legend and Notes

ABBREVIATIONS AND DEFINITIONS:

CFM = airflow, cubic feet/minute
EWT = entering water temperature, Fahrenheit
GPM = water flow in gallons/minute
WPD = water pressure drop, PSI and feet of water
EAT = entering air temperature, Fahrenheit (dry bulb/wet bulb)
HC = air heating capacity, MBTUH
TC = total cooling capacity, MBTUH
SC = sensible cooling capacity, MBTUH
KW = total power unit input, kilowatts
HR = total heat of rejection, MBTUH
HE = total heat of extraction, MBTUH
HW = desuperheater capacity, MBTUH
EER = Energy Efficient Ratio = BTU output/Watt input
COP = Coefficient of Performance = BTU output/BTU input
LWT = leaving water temperature, °F
LAT = leaving air temperature, °F
TH = total heating capacity, MBTUH
LC = latent cooling capacity, MBTUH
S/T = sensible to total cooling ratio

Performance data tables do not include water pumping watts and are based upon 15% (by volume) methanol antifreeze solution. Interpolation between EWT, GPM and CFM data is permissible. Extrapolation for heating data down to 25°F is permissible. Catalog illustrations cover the general appearance of products at time of publication. We reserve the right to make changes in design and construction at any time without notice.

Operating Limits

OPERATING LIMITS	COOLING	HEATING
Air Limits		
Minimum ambient air, DB	-10°F [-23.3°C]	-10°F [-23.3°C]
Rated ambient air, DB	80.0 [26.7°C]	70°F [21.1°C]
Maximum ambient air, DB	120 [48.8°C]	85°F [29°C]
Water Limits		
Minimum entering water	30°F [-1°C]	20°F [-6.7°C]
Normal entering water	50-110°F [10-43°C]	30-70°F [-1 to 21°C]
Maximum entering water	120°F [49°C]	90°F [32°C]
Normal water flow	1.5 to 3.0 gpm per ton [1.6 to 3.2 l/m per kW]	

NOTES: Minimum/maximum limits are only for start-up conditions, and are meant for bringing the space up to occupancy temperature. Units are not designed to operate at the minimum/maximum conditions on a regular basis. The operating limits are dependant upon three primary factors: 1) water temperature, 2) return air temperature, and 3) ambient temperature. When any of the factors are at the minimum or maximum levels, the other two factors must be at the normal level for proper and reliable unit operation.

Pressure Drop

Dual Capacity

Model	GPM	Pressure Drop (psi)				
		30°F	50°F	70°F	90°F	110°F
026 full load	4	1.4	1.3	1.2	1.1	1.0
	6	2.8	2.6	2.4	2.3	2.1
	8	4.7	4.4	4.1	3.8	3.5
	10	7.0	6.6	6.2	5.8	5.3
026 part load	3	0.8	0.7	0.7	0.7	0.6
	5	2.0	1.8	1.7	1.6	1.5
	7	3.6	3.4	3.2	3.0	2.8
	9	5.8	5.5	5.1	4.8	4.4
038 full load	5	1.2	1.2	1.1	1.0	1.0
	7	2.2	2.1	1.9	1.8	1.7
	9	3.4	3.2	3.0	2.8	2.6
	11	4.9	4.6	4.3	4	3.7
038 part load	4	0.9	0.8	0.8	0.7	0.7
	6	1.7	1.6	1.5	1.4	1.3
	8	2.8	2.6	2.5	2.3	2.1
	10	4.2	3.9	3.7	3.4	3.2
049 full load	6	1.2	1.2	1.1	1.0	1.0
	9	2.4	2.2	2.1	2.0	1.8
	12	3.9	3.6	3.4	3.2	2.9
	15	5.7	5.3	5	4.7	4.3
049 part load	5	0.9	0.9	0.8	0.8	0.7
	8	2.0	1.8	1.7	1.6	1.5
	11	3.4	3.1	2.9	2.8	2.5
	14	5.0	4.7	4.4	4.1	3.8
064 full load	8	1.8	1.7	1.6	1.4	1.3
	12	3.8	3.5	3.3	3.0	2.8
	16	6.5	6.0	5.6	5.2	4.8
	20	9.7	9.1	8.5	8.0	7.4
064 part load	6	1.0	0.9	0.9	0.8	0.8
	10	2.6	2.5	2.3	2.1	2.0
	14	5.0	4.7	4.4	4.1	3.8
	18	8.1	7.6	7.1	6.6	6.1
072 full load	12	3.2	3.0	2.8	2.6	2.4
	15	4.5	4.2	4.0	3.7	3.4
	18	6.0	5.7	5.3	4.9	4.6
	21	7.8	7.3	6.8	6.4	5.9
072 part load	10	2.3	2.1	2.0	1.9	1.7
	13	3.6	3.3	3.0	2.8	2.6
	16	5.0	4.6	4.3	4.0	3.7
	19	6.5	6.2	5.8	5.4	5.0

5/30/06

Performance Data
T2GE026 - Performance Data
Low Speed (700CFM)

EWT °F	Flow gpm	WPD		HEATING - EAT 70°F							COOLING - EAT 80/67 °F							
		PSI	FT	Airflow cfm	HC kBtuh	Power kW	HE kBtuh	LAT °F	COP	HWC kBtuh	Airflow cfm	TC kBtuh	SC kBtuh	S/T Ratio	Power kW	HR kBtuh	EER	HWC kBtuh
20	3.0	0.8	1.9	Operation not recommended							Operation not recommended							
	5.0	2.0	4.7															
	7.0	3.7	8.7	500	11.3	1.10	7.5	90.9	3.01	1.7								
				700	11.4	1.11	7.7	85.1	3.03	1.5								
30	3.0	0.8	1.8	Operation not recommended							Operation not recommended							
	5.0	2.0	4.5	500	13.0	1.11	9.2	94.0	3.42	1.7	500	19.4	12.9	0.66	0.56	21.3	34.8	-
				700	13.2	1.12	9.4	87.5	3.46	1.5	700	19.7	14.1	0.71	0.59	21.7	33.5	-
	7.0	3.6	8.4	500	13.2	1.12	9.4	94.5	3.46	1.7	500	19.5	12.9	0.66	0.54	21.3	36.0	-
				700	13.4	1.13	9.6	87.7	3.48	1.6	700	20.0	14.1	0.70	0.57	21.9	35.1	-
40	3.0	0.8	1.8	Operation not recommended							Operation not recommended							
	5.0	1.9	4.4	500	15.3	1.12	11.5	98.3	4.00	1.7	500	20.1	13.4	0.67	0.61	22.2	32.8	-
				700	15.6	1.13	11.8	90.6	4.06	1.6	700	20.5	14.6	0.71	0.64	22.7	31.9	-
	7.0	3.5	8.2	500	15.6	1.13	11.7	98.8	4.02	1.8	500	20.3	13.4	0.66	0.59	22.3	34.1	-
				700	15.9	1.13	12.0	91.0	4.10	1.6	700	20.7	14.6	0.71	0.62	22.8	33.3	-
50	3.0	0.7	1.7	500	16.5	1.12	12.7	100.6	4.34	1.8	500	20.5	13.8	0.67	0.72	23.0	28.3	0.6
				700	16.9	1.12	13.1	92.3	4.42	1.7	700	20.9	15.0	0.72	0.75	23.5	27.8	0.7
	5.0	1.8	4.3	500	17.4	1.14	13.5	102.2	4.46	1.8	500	20.7	13.9	0.67	0.69	23.1	30.1	0.6
				700	17.7	1.14	13.8	93.4	4.54	1.7	700	21.1	15.2	0.72	0.72	23.6	29.5	0.6
	7.0	3.4	7.9	500	17.6	1.16	13.7	102.6	4.46	1.9	500	20.9	13.9	0.66	0.67	23.2	31.4	0.5
				700	18.0	1.15	14.1	93.9	4.60	1.7	700	21.4	15.2	0.71	0.70	23.7	30.7	0.6
60	3.0	0.7	1.7	500	18.7	1.14	14.8	104.6	4.82	1.9	500	19.8	13.5	0.68	0.82	22.6	24.3	0.9
				700	19.1	1.12	15.3	95.3	4.98	1.8	700	20.2	14.7	0.73	0.85	23.1	23.8	0.9
	5.0	1.8	4.1	500	19.6	1.16	15.6	106.3	4.95	2.0	500	20.0	13.7	0.68	0.77	22.7	25.9	0.8
				700	20.1	1.15	16.1	96.6	5.11	1.8	700	20.5	14.9	0.73	0.81	23.2	25.4	0.9
	7.0	3.3	7.6	500	19.9	1.18	15.9	106.9	4.96	2.1	500	20.2	13.7	0.67	0.75	22.8	26.9	0.7
				700	20.4	1.16	16.5	97.0	5.16	1.9	700	20.6	14.9	0.72	0.78	23.3	26.4	0.8
70	3.0	0.7	1.6	500	21.0	1.15	17.0	108.8	5.34	2.2	500	19.8	13.7	0.69	0.93	23.0	21.3	1.2
				700	21.5	1.13	17.6	98.4	5.58	2.0	700	20.2	14.9	0.74	0.97	23.5	20.9	1.2
	5.0	1.7	4.0	500	21.9	1.17	17.9	110.5	5.47	2.2	500	20.0	13.8	0.69	0.88	23.0	22.7	1.1
				700	22.6	1.16	18.6	99.8	5.71	2.1	700	20.5	15.1	0.74	0.92	23.6	22.3	1.2
	7.0	3.2	7.4	500	22.3	1.19	18.3	111.3	5.50	2.3	500	20.2	13.8	0.68	0.86	23.2	23.5	1.0
				700	22.9	1.17	18.9	100.3	5.76	2.1	700	20.6	15.1	0.73	0.89	23.7	23.2	1.1
80	3.0	0.7	1.6	500	22.8	1.18	18.7	112.2	5.65	2.4	500	18.7	13.2	0.71	1.07	22.4	17.5	1.6
				700	23.4	1.15	19.5	101.0	5.96	2.2	700	19.1	14.3	0.75	1.10	22.9	17.3	1.7
	5.0	1.7	3.9	500	23.8	1.21	19.7	114.0	5.77	2.5	500	18.9	13.3	0.71	1.01	22.3	18.7	1.5
				700	24.6	1.18	20.5	102.5	6.11	2.3	700	19.3	14.5	0.75	1.04	22.9	18.5	1.6
	7.0	3.1	7.1	500	24.2	1.22	20.0	114.8	5.80	2.6	500	19.1	13.3	0.70	0.98	22.4	19.5	1.4
				700	25.0	1.19	20.9	103.0	6.15	2.4	700	19.5	14.5	0.75	1.01	22.9	19.2	1.6
90	3.0	0.7	1.5	500	24.7	1.21	20.6	115.7	5.99	2.7	500	17.1	12.5	0.73	1.22	21.3	14.0	2.2
				700	25.5	1.17	21.5	103.8	6.38	2.5	700	17.5	13.5	0.77	1.26	21.8	13.9	2.3
	5.0	1.6	3.7	500	25.8	1.24	21.5	117.7	6.10	2.8	500	17.3	12.6	0.73	1.16	21.2	14.9	2.0
				700	26.7	1.19	22.6	105.3	6.54	2.6	700	17.6	13.7	0.78	1.19	21.7	14.9	2.2
	7.0	3.0	6.9	500	26.2	1.25	21.9	118.5	6.12	2.9	500	17.5	12.6	0.72	1.12	21.3	15.7	1.9
				700	27.2	1.21	23.0	105.9	6.59	2.7	700	17.8	13.7	0.77	1.16	21.7	15.4	2.1
100	3.0	0.6	1.5	Operation not recommended							Operation not recommended							
	5.0	1.6	3.6								500	16.7	12.5	0.75	1.32	21.2	12.6	2.6
											700	17.0	13.6	0.80	1.36	21.6	12.5	2.8
	7.0	2.9	6.6								500	16.9	12.5	0.74	1.28	21.2	13.2	2.4
											700	17.2	13.6	0.79	1.32	21.7	13.0	2.7
110	3.0	0.6	1.4								Operation not recommended							
	5.0	1.5	3.4								500	14.6	11.5	0.79	1.50	19.7	9.7	3.3
											700	14.9	12.5	0.84	1.54	20.2	9.7	3.6
	7.0	2.8	6.4								500	14.8	11.5	0.78	1.46	19.7	10.1	3.1
											700	15.1	12.5	0.83	1.50	20.2	10.0	3.4
120	3.0	0.6	1.3								Operation not recommended							
	5.0	1.4	3.3								500	14.0	11.4	0.82	1.71	19.8	8.2	4.1
											700	14.2	12.4	0.87	1.75	20.2	8.1	4.4
	7.0	2.7	6.1								500	14.1	11.4	0.81	1.65	19.7	8.5	3.8
											700	14.4	12.4	0.86	1.70	20.2	8.5	4.2

Multiple Flow Rates (for EWT) are shown in the table above. The lowest flow rate shown is used for geothermal open loop/well water systems with a minimum 50° F. The second flow rate shown is the minimum geothermal closed loop flow rate. The third flow rate shown is optimum for geothermal closed loop and the suggested flow rate for boiler tower applications.

T2GE026 - Performance Data

High Speed (900CFM)

EWT °F	Flow gpm	WPD		HEATING - EAT 70°F							COOLING - EAT 80/67 °F							
		PSI	FT	Airflow cfm	HC kBtuh	Power kW	HE kBtuh	LAT °F	COP	HWC kBtuh	Airflow cfm	TC kBtuh	SC kBtuh	S/T Ratio	Power kW	HR kBtuh	EER	HWC kBtuh
20	4.0	1.4	3.2	Operation not recommended							Operation not recommended							
	6.0	2.9	6.6															
	8.0	4.8	11.1	700	15.7	1.42	10.9	90.8	3.25	2.0								
				900	16.0	1.43	11.1	86.4	3.27	1.8								
30	4.0	1.4	3.2	Operation not recommended							Operation not recommended							
	6.0	2.8	6.4	700	18.1	1.46	13.1	93.9	3.63	2.2	700	26.1	17.2	0.66	0.94	29.3	27.9	-
				900	18.4	1.47	13.4	89.0	3.68	2.0	900	26.5	18.8	0.71	0.99	29.9	26.9	-
	8.0	4.7	10.8	700	18.4	1.47	13.4	94.4	3.68	2.2	700	26.2	17.2	0.66	0.91	29.3	28.9	-
				900	18.7	1.48	13.6	89.2	3.69	2.0	900	26.8	18.8	0.70	0.95	30.1	28.2	-
40	4.0	1.3	3.1	Operation not recommended							Operation not recommended							
	6.0	2.7	6.2	700	21.0	1.52	15.8	97.8	4.06	2.4	700	26.4	17.7	0.67	1.02	29.9	26.0	-
				900	21.4	1.52	16.2	92.0	4.13	2.2	900	26.9	19.3	0.72	1.07	30.6	25.2	-
	8.0	4.5	10.4	700	21.4	1.53	16.1	98.3	4.08	2.5	700	26.7	17.7	0.66	0.99	30.0	27.0	-
				900	21.8	1.53	16.5	92.4	4.16	2.3	900	27.2	19.3	0.71	1.03	30.8	26.4	-
50	4.0	1.3	3.0	700	22.7	1.55	17.4	100.0	4.28	2.6	700	26.3	17.9	0.68	1.19	30.3	22.2	1.2
				900	23.1	1.55	17.8	93.8	4.36	2.4	900	26.8	19.5	0.73	1.23	31.0	21.7	1.3
	6.0	2.6	6.0	700	23.8	1.59	18.4	101.5	4.40	2.7	700	26.5	18.1	0.68	1.13	30.4	23.6	1.1
				900	24.3	1.59	18.8	95.0	4.48	2.5	900	27.1	19.7	0.73	1.17	31.1	23.1	1.2
	8.0	4.4	10.1	700	24.2	1.61	18.7	101.9	4.40	2.8	700	26.8	18.1	0.67	1.09	30.5	24.6	1.0
				900	24.7	1.60	19.3	95.4	4.53	2.6	900	27.4	19.7	0.72	1.14	31.2	24.0	1.2
60	4.0	1.2	2.9	700	25.5	1.64	19.9	103.7	4.57	3.0	700	26.0	17.8	0.68	1.29	30.4	20.2	1.4
				900	26.1	1.62	20.6	96.8	4.72	2.7	900	26.5	19.3	0.73	1.34	31.0	19.8	1.5
	6.0	2.5	5.8	700	26.7	1.67	21.0	105.3	4.69	3.1	700	26.2	17.9	0.68	1.22	30.4	21.5	1.3
				900	27.4	1.66	21.7	98.2	4.84	2.8	900	26.8	19.5	0.73	1.27	31.1	21.1	1.5
	8.0	4.2	9.8	700	27.2	1.69	21.4	105.9	4.71	3.1	700	26.5	17.9	0.68	1.19	30.5	22.3	1.3
				900	27.8	1.67	22.1	98.6	4.89	2.9	900	27.0	19.5	0.72	1.23	31.2	21.9	1.4
70	4.0	1.2	2.8	700	28.5	1.72	22.6	107.6	4.84	3.3	700	25.6	17.7	0.69	1.43	30.5	17.9	1.8
				900	29.1	1.69	23.4	100.0	5.06	3.1	900	26.1	19.2	0.74	1.49	31.2	17.6	1.9
	6.0	2.4	5.6	700	29.7	1.76	23.7	109.3	4.96	3.4	700	25.8	17.8	0.69	1.35	30.5	19.1	1.7
				900	30.6	1.73	24.7	101.5	5.17	3.2	900	26.4	19.5	0.74	1.41	31.3	18.8	1.8
	8.0	4.1	9.5	700	30.3	1.78	24.2	110.0	4.99	3.5	700	26.1	17.8	0.68	1.32	30.6	19.8	1.5
				900	31.1	1.75	25.1	102.0	5.22	3.3	900	26.6	19.5	0.73	1.36	31.3	19.5	1.7
80	4.0	1.2	2.7	700	31.0	1.83	24.8	111.1	4.98	3.7	700	24.6	17.4	0.71	1.59	30.0	15.5	2.2
				900	31.9	1.78	25.9	102.9	5.26	3.5	900	25.1	18.9	0.75	1.64	30.7	15.3	2.4
	6.0	2.4	5.4	700	32.4	1.87	26.0	112.9	5.09	3.8	700	24.8	17.5	0.71	1.50	30.0	16.5	2.1
				900	33.5	1.82	27.3	104.4	5.39	3.6	900	25.4	19.1	0.75	1.55	30.7	16.4	2.3
	8.0	4.0	9.2	700	33.0	1.89	26.5	113.6	5.11	4.0	700	25.1	17.5	0.70	1.46	30.1	17.3	1.9
				900	34.0	1.84	27.8	105.0	5.43	3.7	900	25.6	19.1	0.75	1.51	30.7	17.0	2.1
90	4.0	1.1	2.6	700	33.7	1.94	27.1	114.6	5.10	4.2	700	23.3	16.8	0.72	1.75	29.3	13.3	2.8
				900	34.9	1.88	28.5	105.9	5.44	3.9	900	23.9	18.2	0.76	1.81	30.0	13.2	3.0
	6.0	2.3	5.2	700	35.2	1.98	28.4	116.6	5.20	4.3	700	23.5	17.0	0.72	1.66	29.2	14.2	2.6
				900	36.4	1.91	29.9	107.5	5.58	4.0	900	24.1	18.5	0.77	1.71	29.9	14.1	2.8
	8.0	3.8	8.8	700	35.8	2.01	28.9	117.3	5.22	4.4	700	23.9	17.0	0.71	1.60	29.3	14.9	2.4
				900	37.1	1.94	30.5	108.2	5.61	4.1	900	24.3	18.5	0.76	1.66	29.9	14.6	2.7
100	4.0	1.1	2.5	Operation not recommended							Operation not recommended							
	6.0	2.2	5.1								700	22.4	16.5	0.74	1.86	28.7	12.0	3.2
											900	22.8	17.9	0.78	1.91	29.4	11.9	3.5
	8.0	3.7	8.5								700	22.6	16.5	0.73	1.80	28.8	12.6	3.0
											900	23.0	17.9	0.78	1.86	29.4	12.4	3.3
110	4.0	1.0	2.4								Operation not recommended							
	6.0	2.1	4.9								700	20.5	15.5	0.76	2.06	27.5	10.0	3.9
											900	20.9	16.9	0.81	2.12	28.1	9.9	4.2
	8.0	3.5	8.2								700	20.7	15.5	0.75	2.00	27.5	10.4	3.6
											900	21.1	16.9	0.80	2.06	28.1	10.3	4.0
120	4.0	1.0	2.3								Operation not recommended							
	6.0	2.0	4.7								700	19.0	14.9	0.79	2.31	26.8	8.2	4.7
											900	19.3	16.2	0.84	2.37	27.4	8.2	5.1
	8.0	3.4	7.9								700	19.1	14.9	0.78	2.23	26.7	8.6	4.4
											900	19.5	16.2	0.83	2.30	27.4	8.5	4.8

Multiple Flow Rates (for EWT) are shown in the table above. The lowest flow rate shown is used for geothermal open loop/well water systems with a minimum 50° F. The second flow rate shown is the minimum geothermal closed loop flow rate. The third flow rate shown is optimum for geothermal closed loop and the suggested flow rate for boiler tower applications.

T2GE038 - Performance Data

Low Speed (1050CFM)

EWT °F	Flow gpm	WPD		HEATING - EAT 70°F							COOLING - EAT 80/67 °F							
		PSI	FT	Airflow cfm	HC kBtuh	Power kW	HE kBtuh	LAT °F	COP	HWC kBtuh	Airflow cfm	TC kBtuh	SC kBtuh	S/T Ratio	Power kW	HR kBtuh	EER	HWC kBtuh
20	4.0	0.9	2.1	Operation not recommended							Operation not recommended							
	6.0	1.7	4.0															
	8.0	2.9	6.7	900	15.5	1.47	10.5	85.9	3.10	2.5								
				1050	16.1	1.50	11.0	84.2	3.15	2.2								
30	4.0	0.9	2.0	Operation not recommended							Operation not recommended							
	6.0	1.7	3.9	900	17.2	1.45	12.3	87.7	3.48	2.4	900	26.6	16.8	0.63	0.73	29.1	36.5	-
				1050	17.9	1.49	12.8	85.8	3.53	2.2	1050	27.3	18.6	0.68	0.74	29.8	36.8	-
	8.0	2.8	6.5	900	18.3	1.49	13.2	88.8	3.61	2.5	900	27.0	17.3	0.64	0.72	29.5	37.4	-
				1050	19.1	1.53	13.9	86.8	3.66	2.2	1050	27.8	19.1	0.69	0.74	30.3	37.7	-
40	4.0	0.8	1.9	Operation not recommended							Operation not recommended							
	6.0	1.6	3.8	900	20.3	1.48	15.3	90.9	4.03	2.5	900	27.7	18.0	0.65	0.79	30.4	35.1	-
				1050	21.0	1.51	15.9	88.6	4.09	2.3	1050	28.4	19.9	0.70	0.80	31.2	35.3	-
	8.0	2.7	6.3	900	21.4	1.51	16.3	92.0	4.15	2.6	900	28.1	18.5	0.66	0.78	30.8	35.9	-
				1050	22.2	1.54	16.9	89.5	4.21	2.3	1050	28.9	20.4	0.71	0.80	31.6	36.2	-
50	4.0	0.8	1.9	900	22.4	1.50	17.3	93.0	4.36	2.6	900	28.6	19.3	0.67	0.90	31.6	31.8	0.9
				1050	23.1	1.53	17.9	90.4	4.44	2.4	1050	29.4	21.3	0.73	0.92	32.5	32.1	1.0
	6.0	1.6	3.7	900	23.2	1.51	18.0	93.9	4.51	2.7	900	28.8	19.4	0.67	0.88	31.8	33.0	0.8
				1050	23.9	1.52	18.7	91.1	4.59	2.4	1050	29.6	21.5	0.72	0.89	32.7	33.2	0.9
	8.0	2.6	6.1	900	24.3	1.54	19.0	95.0	4.62	2.7	900	29.3	19.9	0.68	0.87	32.3	33.8	0.8
				1050	25.0	1.56	19.7	92.0	4.70	2.5	1050	30.1	22.0	0.73	0.88	33.1	34.1	0.9
60	4.0	0.8	1.8	900	25.3	1.53	20.0	96.0	4.83	2.8	900	27.4	18.6	0.68	1.00	30.9	27.3	1.2
				1050	25.9	1.54	20.6	92.8	4.91	2.6	1050	28.2	20.6	0.73	1.02	31.7	27.6	1.3
	6.0	1.5	3.6	900	26.3	1.53	21.1	97.0	5.03	2.9	900	27.7	18.7	0.67	0.98	31.0	28.3	1.1
				1050	26.9	1.54	21.6	93.7	5.12	2.7	1050	28.5	20.7	0.73	1.00	31.9	28.5	1.2
	8.0	2.5	5.9	900	27.2	1.57	21.8	98.0	5.09	3.0	900	28.1	19.2	0.68	0.97	31.5	29.0	1.1
				1050	27.8	1.57	22.4	94.5	5.18	2.7	1050	28.9	21.2	0.73	0.99	32.3	29.3	1.2
70	4.0	0.8	1.8	900	28.0	1.56	22.7	98.9	5.27	3.1	900	27.1	18.8	0.69	1.14	31.0	23.8	1.7
				1050	28.6	1.56	23.3	95.2	5.37	2.9	1050	27.8	20.8	0.75	1.16	31.8	24.0	1.8
	6.0	1.5	3.5	900	29.3	1.55	24.0	100.1	5.52	3.2	900	27.3	18.9	0.69	1.11	31.1	24.7	1.6
				1050	29.8	1.55	24.5	96.3	5.63	3.0	1050	28.1	21.0	0.75	1.13	32.0	24.9	1.7
	8.0	2.5	5.7	900	30.0	1.59	24.6	100.9	5.55	3.3	900	27.8	19.4	0.70	1.10	31.5	25.3	1.5
				1050	30.6	1.58	25.2	96.9	5.65	3.1	1050	28.6	21.5	0.75	1.12	32.4	25.5	1.6
80	4.0	0.7	1.7	900	30.7	1.59	25.3	101.6	5.66	3.5	900	26.1	18.4	0.71	1.30	30.5	20.1	2.3
				1050	31.1	1.58	25.7	97.4	5.77	3.3	1050	26.8	20.4	0.76	1.32	31.3	20.3	2.5
	6.0	1.4	3.3	900	32.2	1.58	26.8	103.1	5.97	3.6	900	26.3	18.6	0.71	1.26	30.6	20.8	2.2
				1050	32.6	1.57	27.2	98.7	6.09	3.3	1050	27.0	20.5	0.76	1.29	31.4	21.0	2.4
	8.0	2.4	5.5	900	32.6	1.61	27.1	103.6	5.93	3.7	900	26.7	19.0	0.71	1.25	31.0	21.4	2.0
				1050	33.0	1.60	27.5	99.1	6.05	3.4	1050	27.5	21.1	0.77	1.28	31.8	21.5	2.2
90	4.0	0.7	1.6	900	33.3	1.62	27.8	104.3	6.04	4.0	900	24.2	17.2	0.71	1.48	29.2	16.4	3.1
				1050	33.6	1.60	28.1	99.6	6.16	3.7	1050	24.8	19.1	0.77	1.50	30.0	16.5	3.3
	6.0	1.4	3.2	900	35.0	1.60	29.5	106.0	6.41	4.1	900	24.4	17.3	0.71	1.44	29.3	17.0	2.9
				1050	35.2	1.58	29.8	101.1	6.54	3.8	1050	25.1	19.2	0.77	1.47	30.1	17.1	3.1
	8.0	2.3	5.3	900	35.2	1.63	29.6	106.2	6.31	4.2	900	24.8	17.8	0.72	1.43	29.6	17.4	2.7
				1050	35.3	1.61	29.8	101.2	6.44	3.9	1050	25.5	19.7	0.77	1.45	30.4	17.5	3.0
100	4.0	0.7	1.6	Operation not recommended							Operation not recommended							
	6.0	1.3	3.1								900	23.5	17.6	0.75	1.64	29.1	14.3	3.8
											1050	24.2	19.5	0.81	1.67	29.9	14.4	4.1
	8.0	2.2	5.1								900	23.9	18.1	0.76	1.63	29.5	14.7	3.5
											1050	24.6	20.0	0.81	1.66	30.2	14.8	3.9
110	4.0	0.7	1.5								Operation not recommended							
	6.0	1.3	3.0								900	21.1	16.6	0.79	1.87	27.5	11.3	4.8
											1050	21.7	18.3	0.85	1.90	28.2	11.4	5.2
	8.0	2.1	4.9								900	21.4	17.0	0.79	1.85	27.8	11.6	4.4
											1050	22.0	18.8	0.85	1.89	28.5	11.7	4.9
120	4.0	0.6	1.5								Operation not recommended							
	6.0	1.2	2.9								900	20.0	16.4	0.82	2.12	27.2	9.4	5.9
											1050	20.5	18.2	0.88	2.16	27.9	9.5	6.4
	8.0	2.0	4.7								900	20.3	16.8	0.83	2.10	27.5	9.7	5.5
											1050	20.9	18.6	0.89	2.14	28.2	9.7	6.1

Multiple Flow Rates (for EWT) are shown in the table above. The lowest flow rate shown is used for geothermal open loop/well water systems with a minimum 50° F. The second flow rate shown is the minimum geothermal closed loop flow rate. The third flow rate shown is optimum for geothermal closed loop and the suggested flow rate for boiler tower applications.

T2GE038 - Performance Data

High Speed (1250CFM)

EWT °F	Flow gpm	WPD		HEATING - EAT 70°F							COOLING - EAT 80/67 °F							
		PSI	FT	Airflow cfm	HC kBtuh	Power kW	HE kBtuh	LAT °F	COP	HWC kBtuh	Airflow cfm	TC kBtuh	SC kBtuh	S/T Ratio	Power kW	HR kBtuh	EER	HWC kBtuh
20	5.0	1.3	3.0	Operation not recommended							Operation not recommended							
	7.0	2.3	5.2															
	9.0	3.5	8.1	1050	22.1	2.12	14.9	89.5	3.06	2.8								
				1250	22.9	2.18	15.4	86.9	3.07	2.5								
30	5.0	1.2	2.9	Operation not recommended							Operation not recommended							
	7.0	2.2	5.1	1050	25.5	2.16	18.1	92.5	3.46	3.0	1050	34.5	20.5	0.59	1.47	39.5	23.5	-
				1250	26.2	2.23	18.7	89.4	3.46	2.8	1250	36.5	22.8	0.63	1.55	41.8	23.5	-
	9.0	3.4	7.9	1050	25.9	2.18	18.5	92.9	3.48	3.1	1050	34.7	22.5	0.65	1.42	39.6	24.4	-
				1250	26.8	2.25	19.1	89.8	3.49	2.8	1250	36.8	25.0	0.68	1.51	42.0	24.3	-
40	5.0	1.2	2.8	Operation not recommended							Operation not recommended							
	7.0	2.1	4.9	1050	29.8	2.29	22.0	96.3	3.81	3.4	1050	35.8	21.9	0.61	1.62	41.4	22.1	-
				1250	30.7	2.34	22.7	92.7	3.85	3.1	1250	37.8	24.4	0.65	1.70	43.6	22.2	-
	9.0	3.3	7.6	1050	30.4	2.31	22.5	96.8	3.85	3.5	1050	36.1	23.8	0.66	1.57	41.5	23.0	-
				1250	31.3	2.36	23.3	93.2	3.89	3.2	1250	38.2	26.4	0.69	1.67	43.8	22.9	-
50	5.0	1.2	2.7	1050	32.3	2.35	24.3	98.5	4.03	3.6	1050	36.0	22.8	0.63	1.92	42.6	18.8	1.7
				1250	33.2	2.38	25.1	94.6	4.10	3.4	1250	37.9	25.4	0.67	2.02	44.8	18.8	1.9
	7.0	2.1	4.8	1050	33.4	2.40	25.3	99.5	4.09	3.8	1050	36.8	23.1	0.63	1.81	43.0	20.4	1.6
				1250	34.5	2.43	26.2	95.6	4.16	3.5	1250	38.7	25.7	0.66	1.90	45.2	20.4	1.8
	9.0	3.2	7.4	1050	34.2	2.42	25.9	100.2	4.14	3.9	1050	37.2	24.7	0.66	1.76	43.2	21.1	1.5
				1250	35.3	2.45	26.9	96.1	4.21	3.5	1250	39.1	27.4	0.70	1.85	45.5	21.1	1.7
60	5.0	1.1	2.6	1050	35.6	2.46	27.2	101.4	4.24	4.1	1050	35.7	23.4	0.66	2.04	42.6	17.4	2.1
				1250	36.7	2.48	28.3	97.2	4.35	3.8	1250	37.4	26.0	0.70	2.14	44.7	17.5	2.2
	7.0	2.0	4.6	1050	37.2	2.53	28.6	102.8	4.31	4.2	1050	36.5	23.6	0.65	1.94	43.1	18.8	2.0
				1250	38.4	2.55	29.7	98.4	4.42	3.9	1250	38.2	26.2	0.69	2.02	45.1	18.9	2.1
	9.0	3.1	7.2	1050	38.1	2.56	29.4	103.6	4.36	4.4	1050	36.9	24.9	0.68	1.89	43.3	19.5	1.8
				1250	39.3	2.57	30.6	99.1	4.49	4.0	1250	38.7	27.6	0.71	1.98	45.4	19.5	2.0
70	5.0	1.1	2.5	1050	39.0	2.59	30.1	104.4	4.40	4.6	1050	35.6	24.2	0.68	2.24	43.3	15.9	2.6
				1250	40.3	2.59	31.5	99.9	4.56	4.3	1250	37.2	26.9	0.72	2.33	45.1	16.0	2.8
	7.0	1.9	4.5	1050	41.0	2.68	31.8	106.1	4.48	4.7	1050	36.5	24.5	0.67	2.15	43.9	17.0	2.4
				1250	42.3	2.68	33.2	101.3	4.63	4.4	1250	38.1	27.1	0.71	2.22	45.7	17.2	2.6
	9.0	3.0	6.9	1050	42.0	2.71	32.8	107.1	4.54	4.9	1050	36.9	25.4	0.69	2.09	44.1	17.6	2.3
				1250	43.5	2.70	34.3	102.2	4.72	4.5	1250	38.6	28.2	0.73	2.18	46.0	17.7	2.5
80	5.0	1.1	2.5	1050	41.5	2.70	32.3	106.6	4.50	5.2	1050	34.4	23.8	0.69	2.44	42.7	14.1	3.2
				1250	42.9	2.68	33.8	101.8	4.70	4.8	1250	35.7	26.5	0.74	2.51	44.3	14.2	3.4
	7.0	1.9	4.3	1050	43.9	2.81	34.3	108.7	4.58	5.3	1050	35.3	24.1	0.68	2.35	43.3	15.0	3.0
				1250	45.4	2.78	35.9	103.6	4.78	4.9	1250	36.7	26.8	0.73	2.42	45.0	15.2	3.3
	9.0	2.9	6.7	1050	45.1	2.84	35.4	109.8	4.65	5.5	1050	35.7	24.7	0.69	2.31	43.6	15.5	2.8
				1250	46.7	2.80	37.1	104.6	4.88	5.1	1250	37.2	27.4	0.74	2.37	45.3	15.6	3.1
90	5.0	1.0	2.4	1050	44.0	2.82	34.4	108.8	4.57	5.8	1050	32.5	23.2	0.71	2.63	41.4	12.3	4.0
				1250	45.6	2.78	36.1	103.8	4.81	5.3	1250	33.6	25.8	0.77	2.70	42.8	12.5	4.3
	7.0	1.8	4.2	1050	46.8	2.95	36.7	111.2	4.65	6.0	1050	33.4	23.5	0.70	2.56	42.1	13.1	3.8
				1250	48.4	2.90	38.6	105.9	4.90	5.5	1250	34.7	26.1	0.75	2.62	43.6	13.2	4.1
	9.0	2.8	6.5	1050	48.2	2.99	38.0	112.5	4.73	6.1	1050	33.8	23.7	0.70	2.51	42.4	13.4	3.5
				1250	49.9	2.92	40.0	107.0	5.01	5.7	1250	35.0	26.3	0.75	2.57	43.8	13.6	3.9
100	5.0	1.0	2.3	Operation not recommended							Operation not recommended							
	7.0	1.7	4.0								1050	32.2	23.3	0.72	2.85	41.9	11.3	4.7
											1250	33.3	25.9	0.78	2.90	43.1	11.5	5.0
	9.0	2.7	6.2								1050	32.6	23.2	0.71	2.80	42.1	11.6	4.3
											1250	33.6	25.7	0.76	2.85	43.3	11.8	4.8
110	5.0	1.0	2.2								Operation not recommended							
	7.0	1.7	3.9								1050	29.5	21.9	0.74	3.12	40.1	9.5	5.7
											1250	30.3	24.3	0.80	3.14	41.0	9.6	6.1
	9.0	2.6	6.0								1050	29.8	21.6	0.73	3.06	40.2	9.7	5.3
											1250	30.6	23.8	0.78	3.09	41.1	9.9	5.8
120	5.0	0.9	2.1								Operation not recommended							
	7.0	1.6	3.7								1050	27.7	21.4	0.77	3.48	39.6	8.0	6.8
											1250	28.3	23.9	0.84	3.48	40.2	8.2	7.4
	9.0	2.5	5.8								1050	28.0	20.9	0.75	3.42	39.6	8.2	6.3
											1250	28.6	23.0	0.81	3.43	40.3	8.3	7.0

Multiple Flow Rates (for EWT) are shown in the table above. The lowest flow rate shown is used for geothermal open loop/well water systems with a minimum 50° F. The second flow rate shown is the minimum geothermal closed loop flow rate. The third flow rate shown is optimum for geothermal closed loop and the suggested flow rate for boiler tower applications.

T2GE049 - Performance Data

Low Speed (1350CFM)

EWT °F	Flow gpm	WPD		HEATING - EAT 70°F							COOLING - EAT 80/67 °F							
		PSI	FT	Airflow cfm	HC kBtuh	Power kW	HE kBtuh	LAT °F	COP	HWC kBtuh	Airflow cfm	TC kBtuh	SC kBtuh	S/T Ratio	Power kW	HR kBtuh	EER	HWC kBtuh
20	5.0	0.9	2.2	Operation not recommended							Operation not recommended							
	8.0	2.0	4.6															
	11.0	3.4	7.8	1150	22.2	2.05	15.2	87.9	3.17	4.1								
				1350	23.0	2.08	15.9	85.8	3.24	3.7								
30	5.0	0.9	2.1	Operation not recommended							Operation not recommended							
	8.0	1.9	4.4	1150	25.6	2.09	18.4	90.6	3.58	4.2	1150	35.0	20.6	0.59	1.18	39.1	29.7	-
				1350	26.3	2.10	19.2	88.1	3.67	3.8	1350	36.3	24.2	0.67	1.25	40.6	28.9	-
	11.0	3.3	7.6	1150	26.2	2.10	19.0	91.1	3.65	4.3	1150	35.1	20.5	0.58	1.10	38.9	31.9	-
				1350	27.1	2.13	19.8	88.6	3.73	3.9	1350	36.1	24.2	0.67	1.17	40.0	30.8	-
40	5.0	0.9	2.0	Operation not recommended							Operation not recommended							
	8.0	1.9	4.3	1150	29.3	2.16	21.9	93.6	3.97	4.5	1150	37.0	22.5	0.61	1.30	41.5	28.5	-
				1350	30.4	2.16	23.0	90.8	4.11	4.1	1350	38.3	26.5	0.69	1.37	42.9	27.9	-
	11.0	3.2	7.4	1150	30.3	2.18	22.9	94.4	4.07	4.6	1150	37.2	22.4	0.60	1.22	41.3	30.5	-
				1350	31.3	2.19	23.8	91.5	4.18	4.2	1350	38.2	26.4	0.69	1.29	42.6	29.7	-
50	5.0	0.9	2.0	1150	30.4	2.16	23.0	94.5	4.13	4.7	1150	37.8	24.0	0.64	1.68	43.5	22.5	1.6
				1350	31.4	2.16	24.0	91.5	4.26	4.3	1350	38.9	28.3	0.73	1.75	44.9	22.2	1.6
	8.0	1.8	4.2	1150	32.8	2.23	25.1	96.4	4.31	4.8	1150	38.6	24.1	0.62	1.45	43.5	26.5	1.4
				1350	34.0	2.21	26.4	93.3	4.50	4.4	1350	39.8	28.4	0.71	1.52	45.0	26.1	1.6
	11.0	3.1	7.2	1150	34.0	2.24	26.4	97.4	4.44	5.0	1150	38.8	24.1	0.62	1.37	43.5	28.4	1.3
				1350	35.1	2.24	27.5	94.1	4.59	4.5	1350	40.0	28.4	0.71	1.44	44.9	27.8	1.5
60	5.0	0.8	1.9	1150	33.2	2.24	25.6	96.7	4.34	5.1	1150	37.6	24.0	0.64	1.81	43.7	20.8	2.2
				1350	34.4	2.23	26.8	93.6	4.53	4.8	1350	38.8	28.2	0.73	1.89	45.2	20.5	2.3
	8.0	1.8	4.0	1150	35.9	2.30	28.1	98.9	4.58	5.3	1150	38.2	24.1	0.63	1.61	43.7	23.8	2.0
				1350	37.3	2.27	29.6	95.6	4.82	4.9	1350	39.4	28.4	0.72	1.68	45.1	23.4	2.2
	11.0	3.0	6.9	1150	37.5	2.32	29.5	100.2	4.74	5.5	1150	38.6	24.2	0.63	1.52	43.8	25.3	1.9
				1350	38.8	2.29	31.0	96.6	4.96	5.0	1350	39.8	28.5	0.72	1.59	45.2	25.0	2.1
70	5.0	0.8	1.8	1150	35.9	2.32	28.0	98.9	4.54	5.7	1150	37.8	25.2	0.67	1.99	44.6	19.0	3.1
				1350	37.3	2.29	29.5	95.6	4.77	5.3	1350	39.0	29.6	0.76	2.09	46.1	18.7	3.3
	8.0	1.7	3.9	1150	39.0	2.36	30.9	101.4	4.84	5.9	1150	38.2	25.4	0.67	1.81	44.3	21.1	2.9
				1350	40.5	2.32	32.6	97.8	5.12	5.4	1350	39.4	29.9	0.76	1.89	45.8	20.9	3.1
	11.0	2.9	6.7	1150	40.7	2.39	32.6	102.8	5.00	6.1	1150	38.8	25.6	0.66	1.73	44.7	22.5	2.7
				1350	42.3	2.33	34.3	99.0	5.31	5.6	1350	40.0	30.0	0.75	1.79	46.1	22.3	3.0
80	5.0	0.8	1.8	1150	38.1	2.38	30.0	100.7	4.70	6.4	1150	36.6	24.1	0.66	2.17	44.0	16.8	4.3
				1350	39.6	2.34	31.6	97.2	4.97	5.9	1350	37.7	28.3	0.75	2.27	45.5	16.6	4.5
	8.0	1.6	3.8	1150	41.4	2.40	33.2	103.3	5.05	6.6	1150	36.8	24.4	0.66	2.02	43.7	18.2	4.0
				1350	43.1	2.34	35.1	99.5	5.39	6.1	1350	37.9	28.7	0.76	2.10	45.0	18.0	4.3
	11.0	2.8	6.5	1150	43.5	2.43	35.2	105.0	5.25	6.8	1150	37.6	24.6	0.65	1.93	44.2	19.5	3.7
				1350	45.3	2.36	37.2	101.0	5.61	6.2	1350	38.8	28.9	0.74	2.01	45.6	19.3	4.1
90	5.0	0.7	1.7	1150	40.2	2.43	31.9	102.4	4.85	7.1	1150	34.5	22.2	0.64	2.38	42.6	14.5	5.7
				1350	41.8	2.38	33.7	98.7	5.16	6.6	1350	35.6	26.1	0.73	2.47	44.0	14.4	6.0
	8.0	1.6	3.6	1150	43.7	2.44	35.4	105.2	5.25	7.3	1150	34.5	22.5	0.65	2.25	42.2	15.3	5.3
				1350	45.5	2.36	37.5	101.2	5.65	6.8	1350	35.5	26.4	0.75	2.34	43.4	15.2	5.8
	11.0	2.7	6.2	1150	46.1	2.47	37.7	107.1	5.48	7.5	1150	35.5	22.7	0.64	2.16	42.8	16.4	4.9
				1350	48.1	2.39	39.9	103.0	5.90	7.0	1350	36.6	26.7	0.73	2.25	44.3	16.2	5.5
100	5.0	0.7	1.7	Operation not recommended							Operation not recommended							
	8.0	1.5	3.5								1150	32.9	23.1	0.70	2.53	41.5	13.0	6.9
											1350	33.9	27.2	0.80	2.63	42.9	12.9	7.5
	11.0	2.6	6.0								1150	34.1	23.5	0.69	2.44	42.4	14.0	6.4
											1350	35.1	27.6	0.79	2.55	43.8	13.8	7.1
110	5.0	0.7	1.6								Operation not recommended							
	8.0	1.5	3.4								1150	29.5	21.8	0.74	2.82	39.1	10.5	8.7
											1350	30.5	25.6	0.84	2.94	40.5	10.4	9.5
	11.0	2.5	5.8								1150	30.9	22.2	0.72	2.73	40.2	11.3	8.1
											1350	31.8	26.0	0.82	2.85	41.5	11.1	9.0
120	5.0	0.7	1.5								Operation not recommended							
	8.0	1.4	3.3								1150	27.2	21.2	0.78	3.15	38.0	8.6	10.8
											1350	28.2	24.9	0.89	3.29	39.4	8.6	11.7
	11.0	2.4	5.6								1150	28.8	21.6	0.75	3.06	39.2	9.4	10.1
											1350	29.5	25.4	0.86	3.21	40.5	9.2	11.2

Multiple Flow Rates (for EWT) are shown in the table above. The lowest flow rate shown is used for geothermal open loop/well water systems with a minimum 50° F. The second flow rate shown is the minimum geothermal closed loop flow rate. The third flow rate shown is optimum for geothermal closed loop and the suggested flow rate for boiler tower applications.

T2GE049 - Performance Data

High Speed (1550CFM)

EWT °F	Flow gpm	WPD		HEATING - EAT 70°F							COOLING - EAT 80/67 °F							
		PSI	FT	Airflow cfm	HC kBtuh	Power kW	HE kBtuh	LAT °F	COP	HWC kBtuh	Airflow cfm	TC kBtuh	SC kBtuh	S/T Ratio	Power kW	HR kBtuh	EER	HWC kBtuh
20	6.0	1.3	3.0	Operation not recommended							Operation not recommended							
	9.0	2.5	5.7															
	12.0	4.0	9.2	1350	30.7	2.74	21.3	91.0	3.28	5.2								
				1550	31.7	2.82	22.1	88.9	3.29	4.7								
30	6.0	1.2	2.9	Operation not recommended							Operation not recommended							
	9.0	2.4	5.5	1350	35.0	2.87	25.2	94.0	3.58	5.5	1350	46.3	28.5	0.62	1.90	52.8	24.4	-
				1550	36.1	2.96	26.0	91.5	3.57	5.1	1550	49.1	31.8	0.65	2.02	56.0	24.3	-
	12.0	3.9	8.9	1350	35.5	2.90	25.6	94.4	3.60	5.7	1350	46.8	28.5	0.61	1.81	53.0	25.9	-
				1550	36.7	2.99	26.5	91.9	3.60	5.2	1550	49.5	31.7	0.64	1.93	56.1	25.7	-
40	6.0	1.2	2.8	Operation not recommended							Operation not recommended							
	9.0	2.3	5.3	1350	39.9	3.00	29.7	97.4	3.90	6.1	1350	48.0	30.2	0.63	2.10	55.2	22.9	-
				1550	41.1	3.06	30.6	94.5	3.93	5.6	1550	50.8	33.6	0.66	2.22	58.4	22.9	-
	12.0	3.7	8.7	1350	40.6	3.03	30.3	97.9	3.93	6.3	1350	48.6	30.2	0.62	2.01	55.4	24.2	-
				1550	42.0	3.09	31.4	95.1	3.97	5.7	1550	51.2	33.6	0.66	2.13	58.5	24.1	-
50	6.0	1.2	2.7	1350	42.7	3.10	32.1	99.3	4.03	6.6	1350	48.6	31.0	0.64	2.50	57.2	19.4	2.9
				1550	44.1	3.14	33.3	96.3	4.11	6.1	1550	51.2	34.4	0.67	2.64	60.2	19.4	3.1
	9.0	2.2	5.2	1350	44.4	3.16	33.6	100.4	4.11	6.8	1350	49.2	31.4	0.64	2.35	57.2	21.0	2.7
				1550	45.6	3.21	34.7	97.3	4.17	6.2	1550	51.8	34.9	0.67	2.46	60.2	21.0	2.9
	12.0	3.6	8.4	1350	45.2	3.20	34.3	101.0	4.15	7.0	1350	49.7	31.5	0.63	2.26	57.4	22.0	2.5
				1550	46.7	3.24	35.7	97.9	4.23	6.4	1550	52.3	35.0	0.67	2.37	60.4	22.0	2.8
60	6.0	1.1	2.6	1350	46.6	3.23	35.6	102.0	4.23	7.4	1350	48.1	31.3	0.65	2.66	57.1	18.1	3.6
				1550	48.1	3.24	37.0	98.7	4.34	6.8	1550	50.4	34.7	0.69	2.78	59.9	18.2	3.8
	9.0	2.2	5.0	1350	48.7	3.31	37.4	103.4	4.31	7.6	1350	48.9	31.7	0.65	2.51	57.4	19.5	3.3
				1550	50.2	3.33	38.8	100.0	4.42	7.0	1550	51.2	35.2	0.69	2.62	60.2	19.6	3.6
	12.0	3.5	8.1	1350	49.8	3.35	38.4	104.2	4.36	7.8	1350	49.4	31.8	0.65	2.43	57.7	20.3	3.1
				1550	51.4	3.36	40.0	100.7	4.49	7.2	1550	51.8	35.4	0.68	2.54	60.4	20.4	3.4
70	6.0	1.1	2.5	1350	50.4	3.34	39.0	104.6	4.42	8.3	1350	47.8	31.9	0.67	2.91	57.7	16.4	4.5
				1550	52.0	3.33	40.6	101.1	4.57	7.7	1550	49.9	35.4	0.71	3.01	60.2	16.6	4.7
	9.0	2.1	4.9	1350	52.9	3.44	41.2	106.3	4.50	8.6	1350	48.8	32.3	0.66	2.77	58.3	17.7	4.2
				1550	54.6	3.43	42.8	102.6	4.66	7.9	1550	51.0	35.8	0.70	2.87	60.8	17.8	4.5
	12.0	3.4	7.9	1350	54.3	3.49	42.4	107.2	4.56	8.8	1350	49.3	32.5	0.66	2.69	58.5	18.3	3.9
				1550	56.0	3.47	44.2	103.5	4.73	8.1	1550	51.6	36.1	0.70	2.79	61.1	18.5	4.3
80	6.0	1.1	2.5	1350	53.5	3.52	41.5	106.7	4.45	9.3	1350	45.8	31.2	0.68	3.15	56.5	14.5	5.6
				1550	55.2	3.48	43.4	103.0	4.65	8.6	1550	47.7	34.6	0.73	3.24	58.7	14.7	6.0
	9.0	2.0	4.7	1350	56.5	3.65	44.0	108.7	4.54	9.6	1350	47.0	31.5	0.67	3.03	57.3	15.5	5.3
				1550	58.3	3.60	46.0	104.8	4.74	8.9	1550	48.9	34.9	0.71	3.11	59.5	15.7	5.7
	12.0	3.3	7.6	1350	58.1	3.69	45.5	109.8	4.62	9.9	1350	47.5	31.8	0.67	2.96	57.6	16.0	4.9
				1550	60.0	3.64	47.6	105.8	4.83	9.2	1550	49.4	35.3	0.71	3.04	59.8	16.2	5.4
90	6.0	1.0	2.4	1350	56.5	3.68	43.9	108.7	4.49	10.5	1350	43.0	29.9	0.70	3.38	54.6	12.7	7.1
				1550	58.4	3.61	46.1	104.9	4.74	9.7	1550	44.6	33.2	0.74	3.46	56.4	12.9	7.5
	9.0	2.0	4.5	1350	59.9	3.84	46.8	111.1	4.58	10.8	1350	44.3	30.2	0.68	3.29	55.5	13.5	6.6
				1550	61.9	3.76	49.1	107.0	4.83	10.0	1550	46.0	33.5	0.73	3.35	57.4	13.7	7.2
	12.0	3.2	7.3	1350	61.8	3.87	48.6	112.4	4.67	11.2	1350	44.8	30.5	0.68	3.22	55.8	13.9	6.1
				1550	63.9	3.80	50.9	108.2	4.92	10.3	1550	46.4	33.9	0.73	3.29	57.6	14.1	6.8
100	6.0	1.0	2.3	Operation not recommended							Operation not recommended							
	9.0	1.9	4.4								1350	42.3	29.6	0.70	3.65	54.8	11.6	8.2
											1550	43.7	32.7	0.75	3.70	56.3	11.8	8.9
	12.0	3.1	7.1								1350	42.8	29.9	0.70	3.59	55.0	11.9	7.6
											1550	44.1	33.2	0.75	3.64	56.5	12.1	8.5
110	6.0	1.0	2.2								Operation not recommended							
	9.0	1.8	4.2								1350	38.2	27.6	0.72	3.97	51.8	9.6	10.0
											1550	39.3	30.5	0.78	4.00	52.9	9.8	10.9
	12.0	2.9	6.8								1350	38.6	28.0	0.72	3.92	52.0	9.9	9.3
											1550	39.7	31.0	0.78	3.95	53.2	10.0	10.4
120	6.0	0.9	2.1								Operation not recommended							
	9.0	1.7	4.0								1350	35.5	26.4	0.74	4.42	50.6	8.0	12.1
											1550	36.3	29.2	0.80	4.42	51.4	8.2	13.2
	12.0	2.8	6.5								1350	35.8	26.9	0.75	4.37	50.8	8.2	11.3
											1550	36.6	29.7	0.81	4.37	51.6	8.4	12.5

Multiple Flow Rates (for EWT) are shown in the table above. The lowest flow rate shown is used for geothermal open loop/well water systems with a minimum 50° F. The second flow rate shown is the minimum geothermal closed loop flow rate. The third flow rate shown is optimum for geothermal closed loop and the suggested flow rate for boiler tower applications.

T2GE064 - Performance Data

Low Speed (1500CFM)

EWT °F	Flow gpm	WPD		HEATING - EAT 70°F							COOLING - EAT 80/67 °F							
		PSI	FT	Airflow cfm	HC kBtuh	Power kW	HE kBtuh	LAT °F	COP	HWC kBtuh	Airflow cfm	TC kBtuh	SC kBtuh	S/T Ratio	Power kW	HR kBtuh	EER	HWC kBtuh
20	6.0	1.0	2.4	Operation not recommended							Operation not recommended							
	10.0	2.7	6.2															
	14.0	5.1	11.8	1250	25.8	2.66	16.8	89.1	2.85	4.9								
				1500	26.7	2.69	17.5	86.5	2.91	4.4								
30	6.0	1.0	2.3	Operation not recommended							Operation not recommended							
	10.0	2.6	6.0	1250	30.0	2.74	20.6	92.2	3.21	4.9	1250	45.9	27.0	0.59	1.42	50.8	32.2	-
				1500	31.0	2.77	21.6	89.2	3.28	4.5	1500	47.3	30.8	0.65	1.49	52.4	31.7	-
	14.0	5.0	11.5	1250	31.0	2.74	21.7	93.0	3.32	5.1	1250	46.0	26.9	0.59	1.39	50.8	33.1	-
				1500	32.1	2.77	22.6	89.8	3.39	4.6	1500	47.2	30.7	0.65	1.47	52.2	32.2	-
40	6.0	1.0	2.3	Operation not recommended							Operation not recommended							
	10.0	2.5	5.9	1250	35.4	2.83	25.7	96.2	3.66	5.2	1250	47.3	27.7	0.59	1.56	52.6	30.2	-
				1500	36.3	2.84	26.6	92.4	3.75	4.8	1500	48.7	31.5	0.65	1.64	54.3	29.7	-
	14.0	4.8	11.1	1250	36.5	2.84	26.8	97.0	3.76	5.4	1250	47.4	27.6	0.58	1.53	52.6	31.0	-
				1500	37.5	2.85	27.8	93.1	3.85	4.9	1500	48.7	31.4	0.65	1.61	54.2	30.3	-
50	6.0	0.9	2.2	1250	39.8	2.88	30.0	99.5	4.05	5.5	1250	48.4	28.0	0.58	1.81	54.6	26.7	1.8
				1500	40.9	2.88	31.0	95.2	4.16	5.1	1500	49.8	31.8	0.64	1.91	56.3	26.1	1.9
	10.0	2.5	5.7	1250	40.4	2.93	30.4	99.9	4.04	5.7	1250	48.5	28.3	0.58	1.75	54.5	27.8	1.7
				1500	41.3	2.91	31.4	95.5	4.16	5.2	1500	50.0	32.1	0.64	1.83	56.2	27.3	1.8
	14.0	4.7	10.8	1250	41.6	2.95	31.6	100.8	4.14	5.8	1250	48.7	28.3	0.58	1.71	54.5	28.4	1.5
				1500	42.6	2.93	32.6	96.3	4.26	5.3	1500	50.1	32.1	0.64	1.80	56.2	27.9	1.7
60	6.0	0.9	2.1	1250	44.3	2.97	34.1	102.8	4.37	6.0	1250	46.7	27.4	0.59	2.02	53.6	23.1	2.5
				1500	45.2	2.95	35.2	97.9	4.50	5.6	1500	48.1	31.0	0.64	2.12	55.3	22.7	2.7
	10.0	2.4	5.5	1250	45.7	3.02	35.3	103.8	4.42	6.2	1250	46.9	27.7	0.59	1.96	53.6	23.9	2.4
				1500	46.4	2.98	36.2	98.6	4.56	5.7	1500	48.3	31.3	0.65	2.05	55.3	23.6	2.5
	14.0	4.5	10.4	1250	46.8	3.05	36.3	104.6	4.49	6.4	1250	47.1	27.7	0.59	1.92	53.6	24.5	2.2
				1500	47.5	3.01	37.2	99.3	4.63	5.9	1500	48.5	31.3	0.65	2.01	55.3	24.2	2.4
70	6.0	0.9	2.0	1250	48.7	3.07	38.2	106.0	4.65	6.7	1250	45.9	27.8	0.61	2.29	53.7	20.1	3.6
				1500	49.5	3.01	39.2	100.5	4.81	6.2	1500	47.3	31.1	0.66	2.38	55.4	19.9	3.8
	10.0	2.3	5.3	1250	50.7	3.12	40.1	107.6	4.77	6.9	1250	46.1	28.0	0.61	2.22	53.7	20.8	3.3
				1500	51.3	3.05	40.9	101.7	4.93	6.4	1500	47.6	31.5	0.66	2.32	55.5	20.5	3.6
	14.0	4.4	10.1	1250	51.7	3.15	40.9	108.3	4.81	7.1	1250	46.4	28.1	0.61	2.17	53.8	21.4	3.1
				1500	52.2	3.08	41.7	102.3	4.97	6.5	1500	47.8	31.6	0.66	2.27	55.6	21.1	3.4
80	6.0	0.9	2.0	1250	52.8	3.16	42.0	109.1	4.89	7.4	1250	43.9	26.8	0.61	2.58	52.7	17.0	4.9
				1500	53.2	3.09	42.7	102.9	5.05	6.9	1500	45.2	29.9	0.66	2.67	54.3	16.9	5.2
	10.0	2.2	5.1	1250	55.7	3.21	44.8	111.3	5.09	7.7	1250	44.2	27.0	0.61	2.52	52.8	17.6	4.6
				1500	56.0	3.12	45.4	104.6	5.27	7.1	1500	45.6	30.3	0.66	2.62	54.5	17.4	5.0
	14.0	4.2	9.8	1250	56.4	3.25	45.3	111.8	5.08	7.9	1250	44.5	27.2	0.61	2.48	53.0	18.0	4.3
				1500	56.6	3.16	45.8	104.9	5.25	7.3	1500	45.9	30.5	0.66	2.57	54.7	17.9	4.7
90	6.0	0.8	1.9	1250	56.7	3.25	45.6	112.0	5.11	8.3	1250	40.6	25.4	0.63	2.92	50.6	13.9	6.6
				1500	56.9	3.17	46.1	105.1	5.26	7.7	1500	41.8	28.2	0.67	3.00	52.1	13.9	7.0
	10.0	2.1	5.0	1250	60.6	3.30	49.3	114.9	5.37	8.6	1250	41.1	25.7	0.62	2.85	50.8	14.4	6.1
				1500	60.6	3.18	49.7	107.4	5.57	8.0	1500	42.3	28.6	0.68	2.95	52.4	14.3	6.6
	14.0	4.1	9.4	1250	61.0	3.36	49.5	115.2	5.32	8.8	1250	41.4	25.9	0.63	2.82	51.0	14.7	5.7
				1500	60.8	3.24	49.8	107.5	5.51	8.2	1500	42.7	28.8	0.67	2.90	52.6	14.7	6.3
100	6.0	0.8	1.8	Operation not recommended							Operation not recommended							
	10.0	2.1	4.8								1250	39.4	25.7	0.65	3.26	50.5	12.1	8.0
											1500	40.6	28.5	0.70	3.34	52.0	12.1	8.6
	14.0	3.9	9.1								1250	39.8	26.1	0.66	3.21	50.7	12.4	7.4
											1500	41.0	28.8	0.70	3.29	52.3	12.5	8.2
110	6.0	0.8	1.8	Operation not recommended							Operation not recommended							
	10.0	2.0	4.6								1250	35.4	24.3	0.69	3.69	48.0	9.6	10.1
											1500	36.6	26.7	0.73	3.77	49.4	9.7	10.9
	14.0	3.8	8.7								1250	35.9	24.7	0.69	3.64	48.3	9.9	9.4
											1500	37.0	27.1	0.73	3.71	49.7	10.0	10.4
120	6.0	0.7	1.7	Operation not recommended							Operation not recommended							
	10.0	1.9	4.4								1250	33.1	24.4	0.74	4.19	47.4	7.9	12.5
											1500	34.2	26.6	0.78	4.23	48.6	8.1	13.5
	14.0	3.6	8.4								1250	33.7	24.9	0.74	4.14	47.8	8.1	11.6
											1500	34.7	27.1	0.78	4.18	49.0	8.3	12.9

Multiple Flow Rates (for EWT) are shown in the table above. The lowest flow rate shown is used for geothermal open loop/well water systems with a minimum 50° F. The second flow rate shown is the minimum geothermal closed loop flow rate. The third flow rate shown is optimum for geothermal closed loop and the suggested flow rate for boiler tower applications.

T2GE064 - Performance Data

High Speed (1800CFM)

EWT °F	Flow gpm	WPD		HEATING - EAT 70°F							COOLING - EAT 80/67 °F							
		PSI	FT	Airflow cfm	HC kBtuh	Power kW	HE kBtuh	LAT °F	COP	HWC kBtuh	Airflow cfm	TC kBtuh	SC kBtuh	S/T Ratio	Power kW	HR kBtuh	EER	HWC kBtuh
20	8.0	1.8	4.2	Operation not recommended							Operation not recommended							
	12.0	3.8	8.8															
	16.0	6.5	15.1	1500	38.2	3.68	25.7	93.6	3.04	6.0								
				1800	39.2	3.85	26.0	90.1	2.98	5.4								
30	8.0	1.8	4.1	Operation not recommended							Operation not recommended							
	12.0	3.7	8.6	1500	44.1	3.69	31.5	97.2	3.50	6.3	1500	57.9	37.0	0.64	2.32	65.8	24.9	-
				1800	45.3	3.93	31.9	93.3	3.38	5.8	1800	58.4	40.3	0.69	2.47	66.8	23.7	-
	16.0	6.4	14.7	1500	44.7	3.79	31.8	97.6	3.46	6.5	1500	58.5	37.4	0.64	2.28	66.3	25.6	-
				1800	45.8	3.97	32.2	93.5	3.38	5.9	1800	58.9	40.6	0.69	2.43	67.2	24.3	-
40	8.0	1.7	4.0	Operation not recommended							Operation not recommended							
	12.0	3.6	8.3	1500	50.7	3.94	37.3	101.3	3.77	7.0	1500	60.2	38.0	0.63	2.67	69.3	22.5	-
				1800	51.9	4.11	37.9	96.7	3.70	6.4	1800	61.1	41.4	0.68	2.83	70.7	21.6	-
	16.0	6.2	14.2	1500	51.5	4.01	37.8	101.8	3.76	7.2	1500	60.8	38.4	0.63	2.62	69.7	23.2	-
				1800	52.7	4.15	38.5	97.1	3.72	6.5	1800	61.6	41.7	0.68	2.79	71.1	22.1	-
50	8.0	1.7	3.8	1500	54.1	4.10	40.1	103.4	3.87	7.5	1500	61.1	38.3	0.63	3.12	71.8	19.6	3.4
				1800	55.3	4.23	40.8	98.4	3.83	7.0	1800	62.4	41.7	0.67	3.32	73.7	18.8	3.6
	12.0	3.5	8.1	1500	57.2	4.18	43.0	105.3	4.01	7.8	1500	61.8	38.7	0.63	3.06	72.2	20.2	3.2
				1800	58.4	4.29	43.8	100.0	3.99	7.1	1800	63.0	42.1	0.67	3.25	74.1	19.4	3.5
	16.0	6.0	13.8	1500	58.2	4.23	43.8	105.9	4.03	8.0	1500	62.4	39.1	0.63	3.00	72.6	20.8	3.0
				1800	59.4	4.33	44.7	100.6	4.02	7.3	1800	63.6	42.4	0.67	3.19	74.5	19.9	3.3
60	8.0	1.6	3.7	1500	60.7	4.38	45.7	107.5	4.06	8.5	1500	59.7	38.0	0.64	3.37	71.2	17.7	4.2
				1800	62.0	4.46	46.8	101.9	4.08	7.8	1800	61.2	41.3	0.67	3.58	73.5	17.1	4.4
	12.0	3.4	7.8	1500	63.5	4.46	48.3	109.2	4.18	8.7	1500	60.3	38.3	0.64	3.30	71.6	18.3	3.9
				1800	64.8	4.51	49.4	103.4	4.21	8.0	1800	61.9	41.7	0.67	3.51	73.9	17.7	4.2
	16.0	5.8	13.4	1500	64.8	4.51	49.5	110.0	4.22	9.0	1500	60.9	38.7	0.64	3.24	72.0	18.8	3.6
				1800	66.3	4.56	50.8	104.1	4.27	8.2	1800	62.5	42.1	0.67	3.45	74.3	18.1	4.0
70	8.0	1.6	3.6	1500	67.3	4.69	51.3	111.6	4.20	9.5	1500	60.2	38.3	0.64	3.74	73.0	16.1	5.2
				1800	68.8	4.72	52.7	105.4	4.28	8.8	1800	62.1	41.6	0.67	3.99	75.7	15.6	5.5
	12.0	3.3	7.5	1500	69.8	4.76	53.6	113.1	4.30	9.8	1500	60.8	38.7	0.64	3.67	73.4	16.6	4.9
				1800	71.4	4.77	55.1	106.7	4.38	9.0	1800	62.8	42.0	0.67	3.90	76.1	16.1	5.3
	16.0	5.6	12.9	1500	71.6	4.82	55.1	114.2	4.36	10.1	1500	61.4	39.1	0.64	3.61	73.7	17.0	4.5
				1800	73.3	4.82	56.8	107.7	4.46	9.3	1800	63.4	42.5	0.67	3.84	76.5	16.5	5.0
80	8.0	1.5	3.5	1500	74.0	5.00	56.9	115.7	4.34	10.7	1500	56.7	37.0	0.65	4.06	70.6	14.0	6.6
				1800	75.7	4.97	58.7	108.9	4.46	9.9	1800	58.8	40.2	0.68	4.33	73.6	13.6	7.0
	12.0	3.2	7.3	1500	75.7	5.06	58.5	116.8	4.39	11.0	1500	57.3	37.3	0.65	3.98	70.9	14.4	6.2
				1800	77.5	5.01	60.4	109.9	4.54	10.2	1800	59.4	40.6	0.68	4.24	73.9	14.0	6.7
	16.0	5.4	12.5	1500	78.0	5.12	60.6	118.2	4.46	11.4	1500	57.9	37.8	0.65	3.91	71.2	14.8	5.7
				1800	80.0	5.06	62.7	111.1	4.63	10.5	1800	60.1	41.0	0.68	4.17	74.3	14.4	6.4
90	8.0	1.4	3.3	1500	80.7	5.34	62.5	119.8	4.43	12.0	1500	52.2	35.7	0.68	4.35	67.0	12.0	8.3
				1800	82.6	5.26	64.7	112.5	4.60	11.1	1800	54.5	38.7	0.71	4.64	70.3	11.8	8.8
	12.0	3.0	7.0	1500	81.8	5.40	63.3	120.5	4.44	12.4	1500	52.8	36.0	0.68	4.27	67.4	12.4	7.7
				1800	83.8	5.29	65.8	113.1	4.65	11.5	1800	55.0	39.1	0.71	4.54	70.5	12.1	8.4
	16.0	5.2	12.0	1500	84.6	5.47	65.9	122.2	4.53	12.8	1500	53.3	36.4	0.68	4.19	67.6	12.7	7.2
				1800	86.8	5.34	68.6	114.6	4.76	11.8	1800	55.6	39.5	0.71	4.47	70.9	12.4	8.0
100	8.0	1.4	3.2	Operation not recommended							Operation not recommended							
	12.0	2.9	6.8								1500	51.3	35.1	0.68	4.71	67.4	10.9	9.6
											1800	53.7	38.1	0.71	5.02	70.9	10.7	10.4
	16.0	5.0	11.6								1500	51.8	35.5	0.68	4.63	67.6	11.2	8.9
											1800	54.3	38.5	0.71	4.94	71.1	11.0	9.9
110	8.0	1.3	3.1								Operation not recommended							
	12.0	2.8	6.5								1500	45.4	32.1	0.71	5.04	62.6	9.0	11.8
											1800	47.8	34.8	0.73	5.38	66.2	8.9	12.8
	16.0	4.8	11.2								1500	45.8	32.4	0.71	4.95	62.7	9.2	10.9
											1800	48.2	35.2	0.73	5.29	66.3	9.1	12.1
120	8.0	1.3	3.0								Operation not recommended							
	12.0	2.7	6.3								1500	44.2	32.6	0.74	5.56	63.1	7.9	14.2
											1800	46.7	35.4	0.76	5.94	67.0	7.9	15.4
	16.0	4.6	10.7								1500	44.6	33.0	0.74	5.46	63.2	8.2	13.2
											1800	47.1	35.8	0.76	5.84	67.1	8.1	14.7

Multiple Flow Rates (for EWT) are shown in the table above. The lowest flow rate shown is used for geothermal open loop/well water systems with a minimum 50° F. The second flow rate shown is the minimum geothermal closed loop flow rate. The third flow rate shown is optimum for geothermal closed loop and the suggested flow rate for boiler tower applications.

T2GE072 - Performance Data

Low Speed (1700CFM)

EWT °F	Flow gpm	WPD		HEATING - EAT 70°F							COOLING - EAT 80/67 °F							
		PSI	FT	Airflow cfm	HC kBtuh	Power kW	HE kBtuh	LAT °F	COP	HWC kBtuh	Airflow cfm	TC kBtuh	SC kBtuh	S/T Ratio	Power kW	HR kBtuh	EER	HWC kBtuh
20	10.0	2.7	6.2	Operation not recommended							Operation not recommended							
	13.0	3.6	8.3															
	16.0	6.5	15.0	1400	31.5	3.37	20.0	90.8	2.74	5.8								
				1700	33.0	3.41	21.4	88.0	2.84	5.3								
30	10.0	2.6	6.0	Operation not recommended							Operation not recommended							
	13.0	3.4	7.9	1400	35.2	3.39	23.6	93.3	3.04	5.9	1400	49.5	30.2	0.61	1.79	55.6	27.6	-
				1700	36.9	3.43	25.2	90.1	3.15	5.4	1700	51.2	34.7	0.68	1.91	57.7	26.8	-
	16.0	6.4	14.8	1400	36.7	3.39	25.2	94.3	3.17	6.1	1400	49.5	30.2	0.61	1.72	55.4	28.7	-
				1700	38.5	3.43	26.7	90.9	3.28	5.5	1700	51.0	34.7	0.68	1.85	57.3	27.6	-
40	10.0	2.6	6.0	Operation not recommended							Operation not recommended							
	13.0	3.3	7.6	1400	41.4	3.49	29.5	97.4	3.47	6.3	1400	51.7	32.0	0.62	1.97	58.4	26.3	-
				1700	43.2	3.50	31.2	93.5	3.62	5.8	1700	53.4	36.6	0.68	2.08	60.5	25.6	-
	16.0	6.2	14.3	1400	42.8	3.50	30.9	98.3	3.59	6.5	1400	51.8	32.0	0.62	1.91	58.3	27.2	-
				1700	44.7	3.51	32.7	94.4	3.73	5.9	1700	53.4	36.5	0.68	2.03	60.3	26.4	-
50	10.0	2.5	5.8	1400	46.2	3.53	34.2	100.6	3.84	6.6	1400	53.6	33.4	0.62	2.27	61.3	23.6	2.0
				1700	48.3	3.49	36.4	96.3	4.05	6.1	1700	55.2	37.9	0.69	2.38	63.4	23.2	2.1
	13.0	3.2	7.4	1400	46.9	3.57	34.8	101.0	3.85	6.8	1400	53.7	33.7	0.63	2.19	61.2	24.5	1.9
				1700	48.8	3.55	36.7	96.6	4.03	6.3	1700	55.4	38.3	0.69	2.31	63.2	24.0	2.0
	16.0	6.0	13.9	1400	48.3	3.59	36.1	101.9	3.94	7.0	1400	53.9	33.7	0.63	2.13	61.1	25.3	1.8
				1700	50.4	3.57	38.2	97.4	4.13	6.4	1700	55.5	38.3	0.69	2.25	63.2	24.7	1.9
60	10.0	2.4	5.5	1400	51.4	3.64	39.0	104.0	4.13	7.3	1400	52.0	33.0	0.63	2.49	60.5	20.9	2.9
				1700	53.6	3.57	41.4	99.2	4.40	6.7	1700	53.6	37.3	0.70	2.60	62.5	20.6	3.0
	13.0	3.1	7.2	1400	52.9	3.68	40.3	105.0	4.21	7.5	1400	52.3	33.3	0.64	2.41	60.5	21.7	2.7
				1700	55.0	3.62	42.6	99.9	4.45	6.9	1700	53.8	37.7	0.70	2.52	62.4	21.3	2.9
	16.0	5.8	13.4	1400	54.1	3.72	41.4	105.8	4.26	7.7	1400	52.5	33.4	0.64	2.37	60.5	22.2	2.5
				1700	56.2	3.65	43.8	100.6	4.51	7.1	1700	54.1	37.8	0.70	2.47	62.5	21.9	2.7
70	10.0	2.3	5.3	1400	56.7	3.77	43.8	107.5	4.40	8.0	1400	51.7	33.5	0.65	2.79	61.2	18.5	4.0
				1700	59.0	3.66	46.5	102.1	4.72	7.4	1700	53.2	37.7	0.71	2.89	63.0	18.4	4.3
	13.0	3.0	7.0	1400	58.9	3.81	45.8	108.9	4.52	8.3	1400	52.0	33.9	0.65	2.70	61.2	19.3	3.8
				1700	61.2	3.70	48.5	103.3	4.84	7.7	1700	53.5	38.1	0.71	2.80	63.0	19.1	4.1
	16.0	5.6	12.9	1400	59.9	3.87	46.7	109.6	4.54	8.5	1400	52.3	34.1	0.65	2.66	61.3	19.6	3.5
				1700	62.2	3.76	49.4	103.9	4.86	7.9	1700	53.9	38.3	0.71	2.75	63.3	19.6	3.9
80	10.0	2.2	5.1	1400	61.1	3.87	47.9	110.4	4.63	9.0	1400	49.3	32.7	0.66	3.10	59.9	15.9	5.6
				1700	63.3	3.73	50.6	104.5	4.97	8.3	1700	50.8	36.6	0.72	3.19	61.7	15.9	5.9
	13.0	2.9	6.8	1400	64.3	3.92	50.9	112.5	4.81	9.2	1400	49.7	33.1	0.67	3.02	60.0	16.4	5.2
				1700	66.6	3.76	53.8	106.3	5.19	8.5	1700	51.2	37.0	0.72	3.11	61.8	16.4	5.6
	16.0	5.5	12.7	1400	65.0	3.97	51.5	113.0	4.80	9.5	1400	50.1	33.3	0.67	2.98	60.2	16.8	4.8
				1700	67.3	3.82	54.2	106.6	5.16	8.8	1700	51.6	37.3	0.72	3.06	62.1	16.9	5.3
90	10.0	2.1	4.9	1400	65.6	3.99	52.0	113.4	4.82	10.0	1400	45.5	31.1	0.68	3.45	57.3	13.2	7.4
				1700	67.8	3.82	54.7	106.9	5.20	9.3	1700	46.9	34.5	0.74	3.52	58.9	13.3	7.9
	13.0	2.7	6.2	1400	69.8	4.04	56.0	116.2	5.07	10.3	1400	46.0	31.4	0.68	3.38	57.5	13.6	6.9
				1700	72.2	3.84	59.1	109.3	5.51	9.6	1700	47.4	35.0	0.74	3.45	59.2	13.7	7.5
	16.0	5.3	12.2	1400	70.3	4.10	56.3	116.5	5.03	10.6	1400	46.5	31.7	0.68	3.32	57.8	14.0	6.4
				1700	72.5	3.91	59.1	109.5	5.43	9.9	1700	47.9	35.2	0.74	3.40	59.5	14.1	7.2
100	10.0	2.1	4.9	Operation not recommended							Operation not recommended							
	13.0	2.6	6.0								1400	44.1	31.3	0.71	3.82	57.1	11.6	9.0
											1700	45.5	34.7	0.76	3.86	58.7	11.8	9.8
	16.0	5.0	11.6								1400	44.7	31.7	0.71	3.76	57.5	11.9	8.4
											1700	46.0	35.1	0.76	3.81	59.0	12.1	9.3
110	10.0	2.0	4.6								Operation not recommended							
	13.0	2.6	6.0								1400	39.2	29.4	0.75	4.26	53.7	9.2	11.4
											1700	40.5	32.4	0.80	4.28	55.1	9.5	12.4
	16.0	4.8	11.1								1400	39.9	29.8	0.75	4.21	54.2	9.5	10.6
											1700	41.0	32.8	0.80	4.23	55.4	9.7	11.8
120	10.0	1.9	4.4								Operation not recommended							
	13.0	2.4	5.5								1400	36.6	28.6	0.78	4.81	53.0	7.6	14.1
											1700	38.0	31.4	0.83	4.79	54.3	7.9	15.3
	16.0	4.6	10.6								1400	37.4	29.1	0.78	4.73	53.5	7.9	13.1
											1700	38.4	31.9	0.83	4.72	54.5	8.1	14.6

Multiple Flow Rates (for EWT) are shown in the table above. The lowest flow rate shown is used for geothermal open loop/well water systems with a minimum 50° F. The second flow rate shown is the minimum geothermal closed loop flow rate. The third flow rate shown is optimum for geothermal closed loop and the suggested flow rate for boiler tower applications.

T2GE072 - Performance Data

High Speed (2200CFM)

EWT °F	Flow gpm	WPD		HEATING - EAT 70°F							COOLING - EAT 80/67 °F							
		PSI	FT	Airflow cfm	HC kBtuh	Power kW	HE kBtuh	LAT °F	COP	HWC kBtuh	Airflow cfm	TC kBtuh	SC kBtuh	S/T Ratio	Power kW	HR kBtuh	EER	HWC kBtuh
20	12.0	3.8	8.8	Operation not recommended							Operation not recommended							
	15.0	5.8	13.4															
	18.0	8.6	19.9	1850	44.0	4.15	29.9	92.0	3.11	7.7								
				2200	45.7	4.41	30.6	89.2	3.03	6.9								
30	12.0	3.7	8.5	Operation not recommended							Operation not recommended							
	15.0	5.7	13.2	1850	51.0	4.31	36.3	95.5	3.47	8.1	1850	63.3	38.6	0.61	2.51	71.9	25.2	-
				2200	52.8	4.58	37.2	92.2	3.38	7.4	2200	64.5	42.0	0.65	2.67	73.6	24.2	-
	18.0	8.1	18.7	1850	51.5	4.35	36.6	95.8	3.47	8.3	1850	63.9	39.3	0.61	2.47	72.4	25.9	-
				2200	53.4	4.63	37.6	92.5	3.38	7.6	2200	65.1	42.3	0.65	2.62	74.1	24.8	-
40	12.0	3.6	8.3	Operation not recommended							Operation not recommended							
	15.0	5.6	12.9	1850	59.2	4.57	43.6	99.6	3.79	8.9	1850	65.8	41.1	0.62	3.03	76.2	21.7	-
				2200	61.2	4.79	44.9	95.8	3.74	8.2	2200	67.1	44.7	0.67	3.22	78.1	20.8	-
	18.0	8.2	18.9	1850	60.0	4.63	44.2	100.0	3.80	9.2	1850	66.5	41.9	0.63	2.98	76.7	22.3	-
				2200	62.1	4.84	45.6	96.1	3.76	8.4	2200	67.8	45.1	0.66	3.17	78.6	21.4	-
50	12.0	3.5	8.1	1850	63.0	4.77	46.7	101.5	3.87	9.6	1850	67.0	42.8	0.64	3.68	79.6	18.2	3.8
				2200	65.1	4.94	48.3	97.4	3.87	8.9	2200	68.4	46.5	0.68	3.91	81.8	17.5	4.0
	15.0	5.5	12.7	1850	66.5	4.86	50.0	103.3	4.02	9.9	1850	67.7	43.2	0.64	3.61	80.0	18.8	3.5
				2200	68.7	5.02	51.6	98.9	4.02	9.1	2200	69.1	47.0	0.68	3.83	82.1	18.0	3.8
	18.0	7.7	17.8	1850	67.7	4.92	51.0	103.9	4.04	10.2	1850	68.4	44.1	0.64	3.55	80.5	19.3	3.3
				2200	70.0	5.07	52.7	99.4	4.05	9.4	2200	69.8	47.4	0.68	3.77	82.6	18.5	3.7
60	12.0	3.4	7.9	1850	70.8	5.08	53.5	105.4	4.09	10.8	1850	65.8	42.8	0.65	3.91	79.2	16.8	4.6
				2200	73.1	5.18	55.4	100.8	4.14	10.0	2200	67.2	46.3	0.69	4.16	81.4	16.2	4.9
	15.0	5.2	12.0	1850	74.0	5.17	56.3	107.0	4.20	11.2	1850	66.5	43.3	0.65	3.83	79.6	17.4	4.3
				2200	76.4	5.25	58.4	102.1	4.26	10.3	2200	67.8	46.8	0.69	4.07	81.7	16.7	4.7
	18.0	7.5	17.3	1850	75.6	5.23	57.8	107.8	4.24	11.5	1850	67.2	43.9	0.65	3.77	80.1	17.9	4.0
				2200	78.1	5.30	60.0	102.9	4.32	10.5	2200	68.6	47.3	0.69	4.01	82.2	17.1	4.5
70	12.0	3.3	7.6	1850	78.7	5.39	60.3	109.4	4.28	12.2	1850	65.8	43.7	0.66	4.35	80.7	15.1	5.8
				2200	81.2	5.43	62.7	104.2	4.38	11.2	2200	67.2	47.0	0.70	4.63	83.0	14.5	6.2
	15.0	5.0	11.6	1850	81.5	5.48	62.8	110.8	4.36	12.5	1850	66.4	44.1	0.66	4.26	81.0	15.6	5.4
				2200	84.1	5.49	65.4	105.4	4.49	11.6	2200	67.8	47.4	0.70	4.53	83.3	15.0	5.9
	18.0	7.0	16.2	1850	83.6	5.55	64.7	111.8	4.42	12.9	1850	67.2	44.6	0.66	4.19	81.5	16.0	5.0
				2200	86.4	5.55	67.5	106.4	4.56	11.9	2200	68.5	48.0	0.70	4.46	83.8	15.4	5.6
80	12.0	3.2	7.4	1850	85.7	5.75	66.1	112.9	4.36	13.7	1850	62.9	42.5	0.68	4.68	78.9	13.5	7.3
				2200	88.5	5.71	69.0	107.2	4.54	12.7	2200	64.3	45.9	0.72	4.98	81.2	12.9	7.8
	15.0	4.8	11.1	1850	87.7	5.83	67.8	113.9	4.41	14.1	1850	63.6	42.9	0.68	4.58	79.2	13.9	6.9
				2200	90.5	5.75	70.9	108.1	4.61	13.0	2200	64.9	46.4	0.71	4.87	81.5	13.3	7.4
	18.0	6.7	15.5	1850	90.4	5.91	70.2	115.2	4.48	14.5	1850	64.3	43.6	0.68	4.50	79.6	14.3	6.4
				2200	93.4	5.82	73.5	109.3	4.71	13.4	2200	65.6	46.9	0.71	4.79	81.9	13.7	7.1
90	12.0	3.0	6.9	1850	92.8	6.12	71.9	116.4	4.44	15.4	1850	58.8	40.4	0.69	4.89	75.5	12.0	9.2
				2200	95.8	6.00	75.4	110.3	4.68	14.2	2200	60.1	43.9	0.73	5.21	77.8	11.5	9.8
	15.0	4.5	10.4	1850	94.1	6.19	73.0	117.1	4.45	15.8	1850	59.4	40.8	0.69	4.79	75.7	12.4	8.6
				2200	97.1	6.03	76.6	110.9	4.72	14.7	2200	60.6	44.3	0.73	5.10	78.0	11.9	9.3
	18.0	6.5	15.0	1850	97.3	6.27	75.9	118.7	4.54	16.3	1850	60.1	41.6	0.69	4.71	76.1	12.8	8.0
				2200	100.5	6.09	79.7	112.3	4.84	15.1	2200	61.3	44.7	0.73	5.02	78.4	12.2	8.9
100	12.0	2.9	6.7	Operation not recommended							Operation not recommended							
	15.0	4.4	10.2								1850	57.0	40.2	0.71	5.28	75.0	10.8	10.7
											2200	58.1	43.4	0.75	5.62	77.3	10.3	11.6
	18.0	6.3	14.6								1850	57.6	40.8	0.71	5.19	75.3	11.1	9.9
											2200	58.8	43.9	0.75	5.52	77.6	10.6	11.0
110	12.0	2.8	6.5								Operation not recommended							
	15.0	4.3	9.9								1850	50.8	37.2	0.73	5.52	69.7	9.2	13.1
											2200	51.9	40.0	0.77	5.87	71.9	8.8	14.2
	18.0	6.1	14.1								1850	51.4	37.6	0.73	5.43	69.9	9.5	12.2
											2200	52.5	40.4	0.77	5.77	72.2	9.1	13.5
120	12.0	2.7	6.2								Operation not recommended							
	15.0	4.1	9.5								1850	48.2	36.1	0.75	6.06	68.8	8.0	15.8
											2200	49.1	39.0	0.79	6.45	71.1	7.6	17.2
	18.0	5.8	13.4								1850	48.7	36.5	0.75	5.96	69.0	8.2	14.7
											2200	49.7	39.2	0.79	6.32	71.2	7.9	16.3

Multiple Flow Rates (for EWT) are shown in the table above. The lowest flow rate shown is used for geothermal open loop/well water systems with a minimum 50° F. The second flow rate shown is the minimum geothermal closed loop flow rate. The third flow rate shown is optimum for geothermal closed loop and the suggested flow rate for boiler tower applications.

Wiring Schematics

Dual Capacity Split - 208-230/60/1

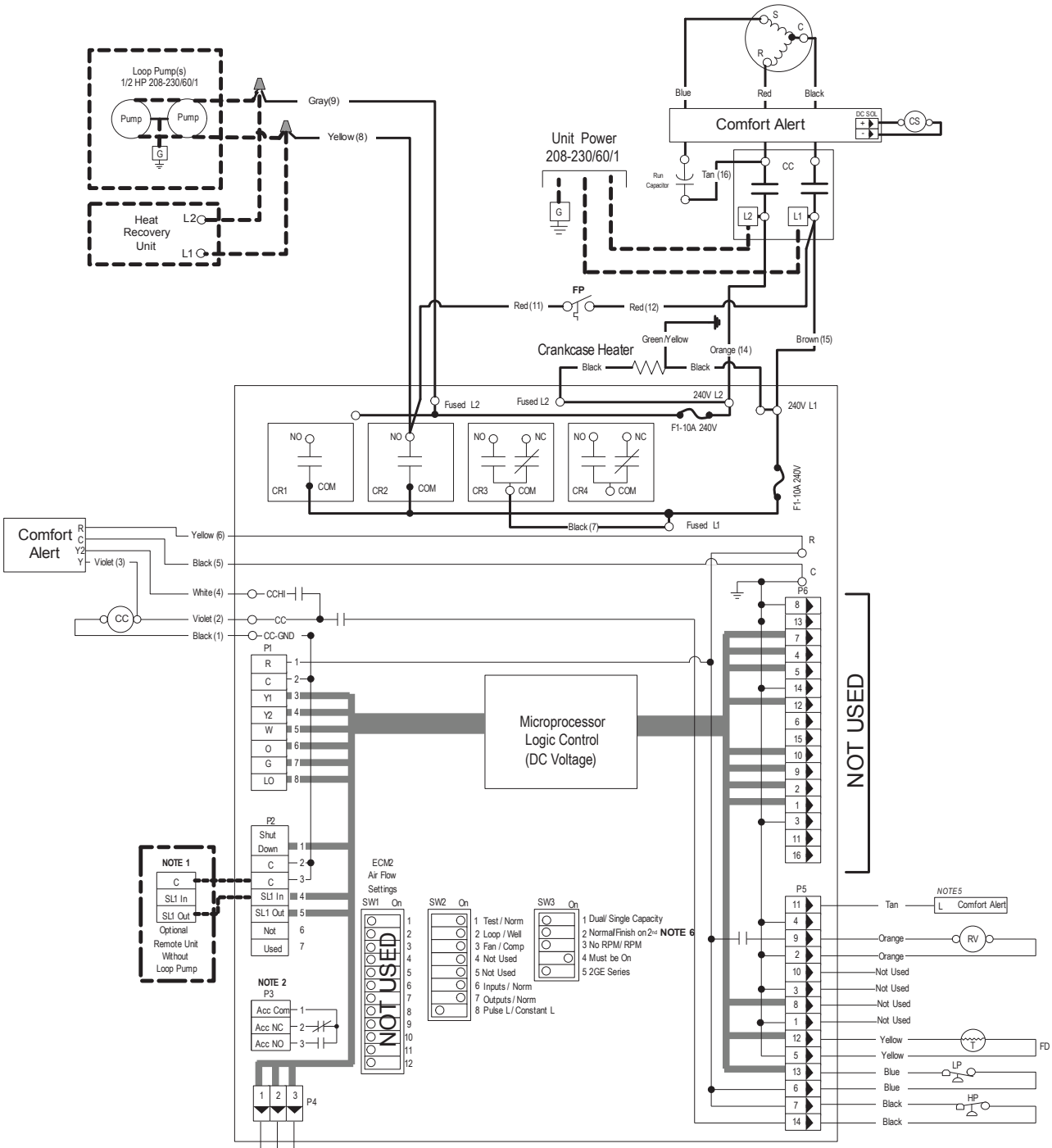

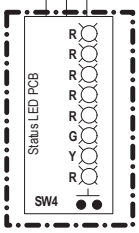

LED	Normal Display Mode	Diagnostic Modes			
		Current Fault Status	Inputs	Outputs	Outputs2
	Field Selection Dips - #1 On, #6 On, #7 On	#1 Off, #6 On, #7 On	#6 Off, #7 On	#6 On, #7 Off	#6 Off, #7 Off
Drain	Not Used	Not Used	Y1	Lo Capacity Compressor	Not Used
Water Flow	FD thermistor(loop<15°F,well<30°F) Lockout	FD thermistor(loop<15°F, well<30°F)	Y2	Hi Capacity Compressor	Not Used
High Press	High Pressure	High Pressure	O	RV	Not Used
Low Press/CA	Low Pressure / Comfort Alert	Low Pressure / Comfort Alert	Not Used	FAN	Not Used
Air Flow	Not Used	Not Used	Not Used	Not Used	Not Used
Status	Microprocessor malfunction*	Not Used	SL1	Loop Pump1	Not Used
DHW Limit	Not Used	Not Used	SL2	Loop Pump2	Not Used
DHW off	Not Used	Not Used	Not Used	Not Used	Not Used

*Green LED not flashing

Wiring Schematics cont.

Dual Capacity Split - 208-230/60/1 cont.

Notes

1 - Connection of remote unit that does not have a loop pump for slave operation.
2 - 24V Accessory relay (see SW2 -3 for description of operation)
3 - Field installed DPDT dual fuel relay. (Required for dual fuel installation)
4 - DHW pump only in models with hot water generation option.
5 - Comfort Alert fault output to Premier Control Board
6 - This Switch allows the unit to down stage with the t-stat when OFF and finish on second stage when ON. Finish second stage reduces stage changing in recip dual capacity compressors and should be ON for unzoned Dual Cap T2GE Series 2 speed units.

Legend

Factory Low voltage wiring
Factory Line voltage wiring
Field low voltage wiring
Field line voltage wiring
Optional block
DC Voltage PCB traces
Internal junction
Quick connect terminal
Wire nut
Field wire lug
Ground
Relay Contacts - N.O., N.C.
Fuse

CA -	Comfort Alert
CS -	Compressor Solenoid
CC -	Compressor Contactor
CR1 -	Not Used
CR2-	Loop Pump Relay1
CR3 -	Loop Pump Relay2
CR4 -	Not Used
F1 and F2 -	Fuses
FD -	Freeze Detection sensor
HP -	High Pressure Switch
LP -	Low Pressure Switch
RV -	Reversing Valve Coil
SW1 -	Not Used
SW2 -	DIP Package 8 Position
SW3 -	DIP Package 5 Position

Crankcase Heater
Thermistor
Light Emitting Diode - Green
Relay Coil
Capacitor w/ Bleed Resistor
Switch-High Pressure
Switch-Low Pressure
Polarized Connector

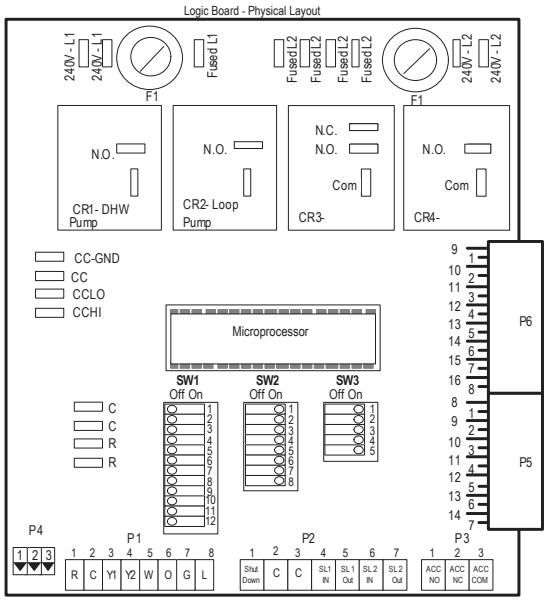

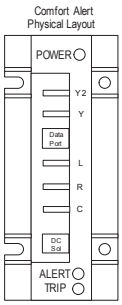

Comfort Alert Status		
LED	Flash Code	Description
Green	Solid	Module Has Power
Red	Solid	Y1 Present But Compressor Not Running
Yellow	Code 1	Long Run Time
	Code 2	System Pressure Trip
	Code 3	Short Cycling
	Code 4	Locked Rotor
	Code 5	Open Circuit
	Code 6	Open Start Circuit
	Code 7	Open Run Circuit
	Code 8	Welded Contactor
	Code 9	Low Voltage

Wiring Schematics cont.

Dual Capacity Split with GeoStart - 208-230/60/1

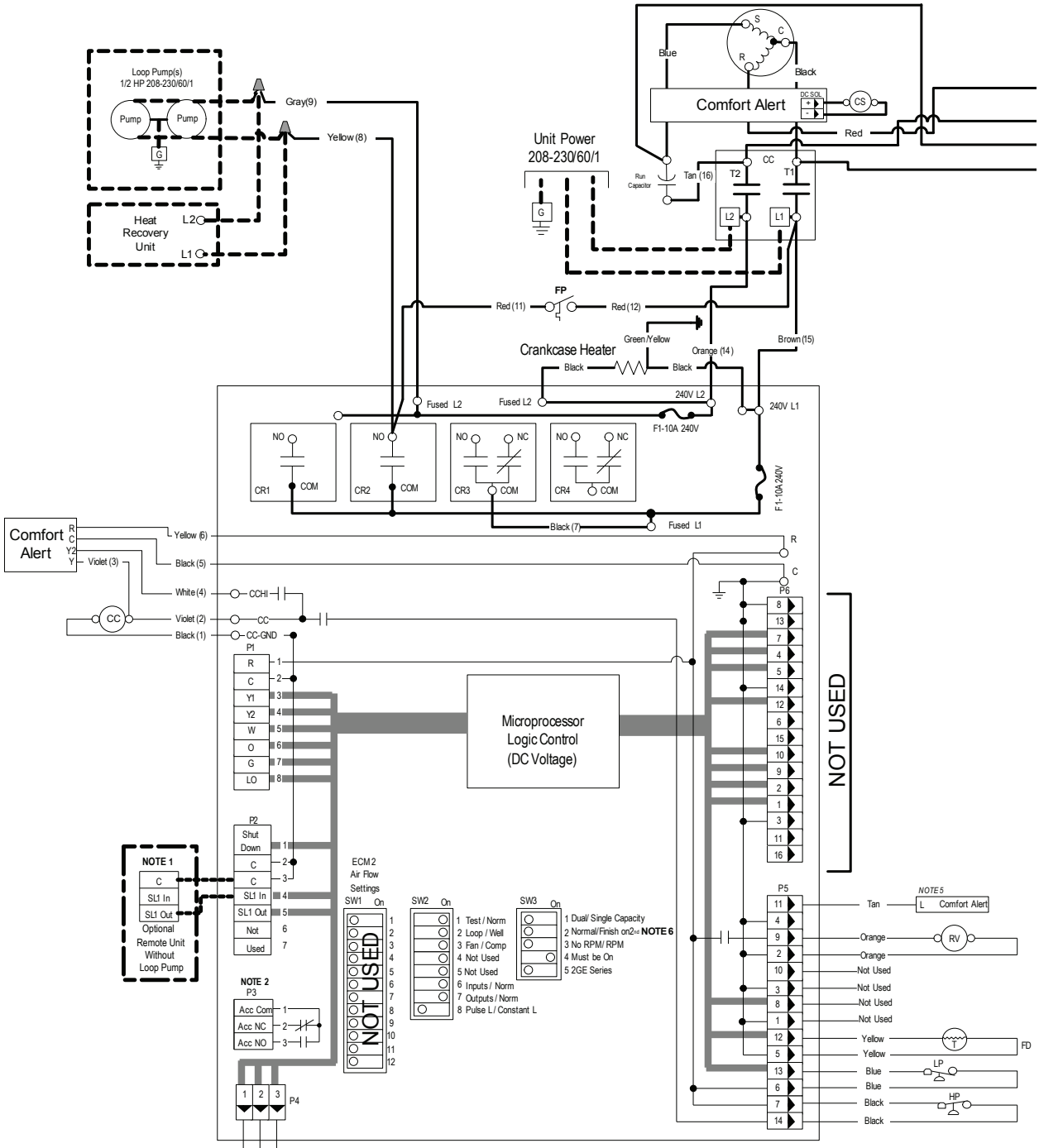

LED	Normal Display Mode	Diagnostic Modes			
		Current Fault Status	Inputs	Outputs	Outputs2
	Field Selection Dips - #1 On, #6 On, #7 On	#1 Off, #6 On, #7 On	#6 Off, #7 On	#6 On, #7 Off	#6 Off, #7 Off
Drain	Not Used	Not Used	Y1	Lo Capacity Compressor	Not Used
Water Flow	FD thermistor(loop<15°F,well<30°F) Lockout	FD thermistor (loop<15°F, well<30°F)	Y2	Hi Capacity Compressor	Not Used
High Press	High Pressure	High Pressure	O	RV	Not Used
Low Press/CA	Low Pressure / Comfort Alert	Low Pressure / Comfort Alert	Not Used	FAN	Not Used
Air Flow	Not Used	Not Used	Not Used	Not Used	Not Used
Status	Microprocessor malfunction*	Not Used	SL1	Loop Pump1	Not Used
DHW Limit	Not Used	Not Used	Sl2	Loop Pump2	Not Used
DHW off	Not Used	Not Used	Not Used	Not Used	Not Used

* Green LED not flashing

Wiring Schematics cont.

Dual Capacity Split with GeoStart - 208-230/60/1 cont.

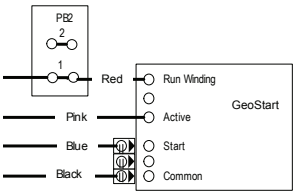

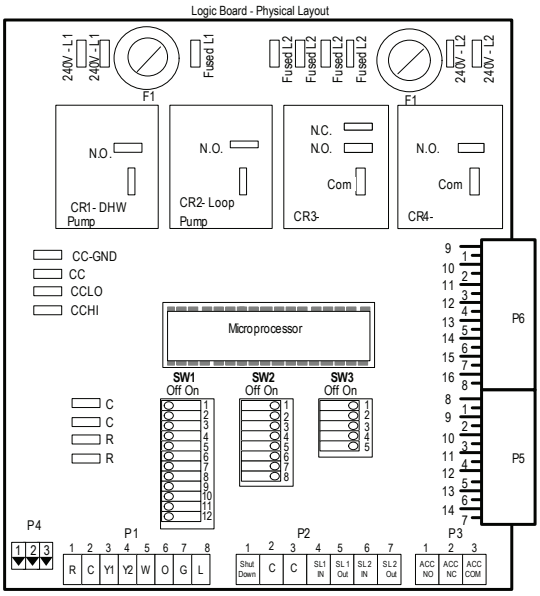

Legend

- Factory Low voltage wiring
- Factory Line voltage wiring
- Field low voltage wiring
- Field line voltage wiring
- Optional block
- DC Voltage PCB traces
- Internal junction
- Quick connect terminal
- Wire nut
- L1 Field wire lug
- Ground
- Relay Contacts - N.O., N.C.
- Fuse

CA-	Comfort Alert
CS-	Compressor Solenoid
CC-	Compressor Contactor
CR1-	Not Used
CR2-	Loop Pump Relay1
CR3-	Loop Pump Relay2
CR4-	Not Used
F1 and F2-	Fuses
FP-	Freeze Detection sensor
HP-	High Pressure Switch
LP-	Low Pressure Switch
RV-	Reversing Valve Coil
SW1-	Not Used
SW2-	DIP Package 8 Position
SW3-	DIP Package 5 Position

- Crankcase Heater
- Thermistor
- G Light Emitting Diode-Green
- Relay Coil
- Capacitor w/ Bleed Resistor
- Switch- High Pressure
- Switch- Low Pressure
- P 2 3 1 Polarized Connector

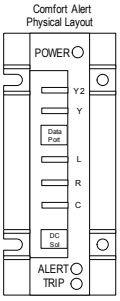

Comfort Alert Status		
LED	Flash Code	Description
Green	Solid	Module Has Power
Red	Solid	Y1 Present But Compressor Not Running
Yellow	Code 1	Long Run Time
	Code 2	System Pressure Trip
	Code 3	Short Cycling
	Code 4	Locked Rotor
	Code 5	Open Circuit
	Code 6	Open Start Circuit
	Code 7	Open Run Circuit
	Code 8	Welded Contactor
	Code 9	Low Voltage

Notes

1 - Connection of remote unit that does not have a loop pump for slave operation.
2 - 24V Accessory relay (see SW2 -3 for description of operation)
3 - Field installed DPDT dual fuel relay. (Required for dual fuel installation)
4 - DHW pump only in models with hot water generation option.
5 - Comfort Alert fault output to Premier Control Board
6 - This Switch allows the unit to down stage with the t-stat when OFF and finish on second stage when ON. Finish second stage reduces stage changing in recip dual capacity compressors and should be ON for unzoned Dual Cap T2GE Series speed units.

Microprocessor Control Features and Operation

The T2GE control system is a microprocessor-based printed circuit board conveniently located in the unit control box for easy accessibility. The microprocessor control is specifically designed for the T2GE Series heat pumps. The microprocessor provides control of the entire unit as well as outputs for status modes, faults, and diagnostics. Low voltage terminal strips provide all necessary terminals for field connections. An LED board is installed for quick diagnostics. The control offers optimal space conditioning. The board accepts traditional 24VAC thermostat inputs.

Startup
The unit will not operate until all the inputs and safety controls are checked for normal conditions. At first power-up, a four-minute delay is employed before the compressor is energized.

Component Sequencing Delays
Components are sequenced and delayed for optimum space conditioning performance.

Accessory Relay
An accessory relay on the control board allows for field connection of solenoid valves, electronic air cleaners, etc. The accessory relay has a normally open output and a normally closed output. The accessory relay is factory set to control the optional electronic air-cleaner.

Short Cycle Protection
The control employs a minimum “off” time of four minutes and a minimum “on” time of two minutes to provide for short cycle protection of the compressor.

Loop Pump Slaving Signals
A signal between multiple T2GE Series control boards at the slave inputs and outputs (SL1 In and Out) will provide for remote control of the loop pump on any unit.

Shutdown Input
A 24VAC common signal to the “shutdown” input on the control board puts the unit into shutdown mode. Compressor, hot water pump and fan operation are suspended.

Safety Controls
The T2GE control receives separate signals for a high pressure switch for safety, a low pressure switch to prevent loss of charge damage, and a low suction temperature thermistor for freeze sensing. Upon a continuous 30-second measurement of the fault (immediate for high pressure), compressor operation is suspended (see Fault Retry), the appropriate lockout LED begins flashing, and an output signal (LO) is made available for connection to a "fault" LED at the thermostat.

Testing
The T2GE control allows service personnel to shorten most timing delays for faster diagnostics.

Fault Retry
All faults are retried twice before finally locking the unit out. The "fault retry" feature is designed to prevent nuisance service calls.

Diagnostics
The T2GE control board allows all inputs and outputs to be displayed on the LEDs for fast and simple control board diagnosis.

Heating Operation

Note: At first power up, a four-minute time delay is employed before the compressor is energized.

Heat, 1st Stage (Y1)
The compressor and loop pumps are energized 10 seconds after the Y1 input.

Heat, 2nd Stage (Y1,Y2) Dual Capacity Units
The second stage compressor will be activated 5 seconds after receiving a "Y2" input as long as the minimum first stage compressor run time of 1 minute has expired.

The Comfort Alert will delay the second stage compressor until 5 seconds after it receives "Y2" from the board.

Cooling Operation

In all cooling operations, the reversing valve directly tracks the “O” input. Thus, anytime the “O” input is present, the reversing valve will be energized.

Cool, 1st Stage (Y1, O)
The compressor and loop pumps are energized 10 seconds after the Y1 input.

Cool, 2nd Stage (Y1, Y2, O) Dual Capacity Units
The second stage compressor will be activated 5 seconds after receiving a "Y2" input as long as the minimum first stage compressor run time of 1 minute has expired.
The Comfort Alert will delay the second stage compressor until 5 seconds after it receives a "Y2" from the board.

Fan Only Operation
The Fan Only mode is controlled directly from the unit thermostat to the unit air handler. No input is given to the microprocessor to operate the fan function.

Microprocessor Control Features cont.

Lockout Conditions

During lockout mode, the appropriate thermostat lockout LEDs (if available) will illuminate. The compressor and loop pumps are de-energized and if the thermostat calls for third stage heating, emergency heat operation will occur. Lockout modes of any kind can be reset at the thermostat after a 5-second waiting period, which restores normal operation.

High Pressure

This lockout mode occurs immediately when the normally closed safety switch is momentarily opened.

Low Pressure

This lockout mode occurs when the normally closed switch is opened for 30 continuous seconds.

Freeze Detection (Water Flow)

This lockout mode occurs when the freeze detection thermistor temperature (located between the TXV and coax) is at or below the selected freeze sensing point (well 30°F or loop 15°F) for 30 continuous seconds.

The unit also contains a secondary freeze detection sensor located on the entering water line of the unit. If the loop reaches a temperature of 20°F the secondary freeze detection sensor will cycle the loop pumps "on" until the loop temperature rises to or above 25°F.

Logic Board - Dual Capacity

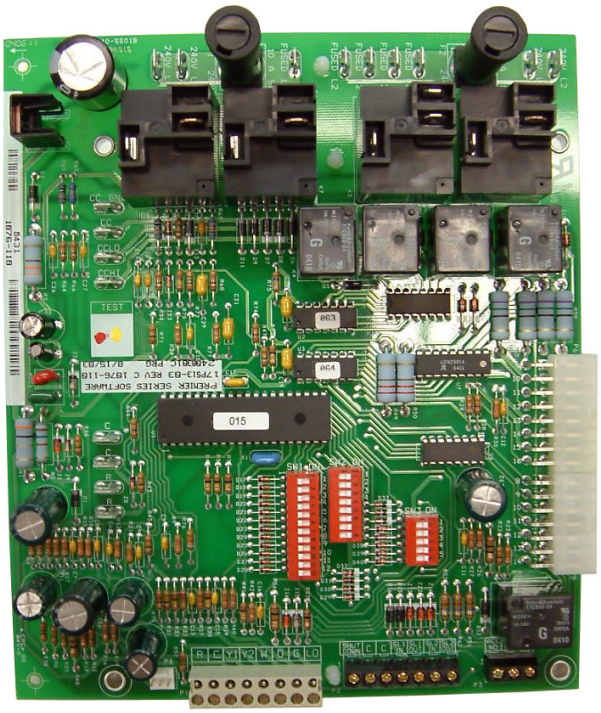

Dual Capacity Operation Logic

OPERATION	HEATING			COOLING	
	STG1	STG2	STG3	STG1	STG2*
COMPRESSOR-LOW	ON	OFF	OFF	ON	OFF
COMPRESSOR-HI	OFF	ON	OFF	OFF	ON
FAN	ON	ON	ON	ON	ON
LOOP PUMP	ON	ON	OFF	ON	ON
REVERSING VALVE	OFF	OFF	OFF	ON	ON
T-STAT SIGNAL	Y1	Y1, Y2	W	Y1, O	Y1, Y2, O

Thermostat Displays

When using a fault monitor thermostat and SW2-8 is in the pulsing “L” position (off), the system monitor will enable a user to view the thermostat and count the fault indicator flashes to determine the lockout condition the unit is experiencing.

When using an A/TCONT802 or 803 thermostat and SW2-8 is in the pulsing “L” position (off), the system monitor will enable the user to view the thermostat and determine the fault. SW2-8 in the "on" position will send a constant signal to the fault indicator in the event of a system lockout condition. The LED board on the front of the unit will display all lockouts. The Low Pressure LED will flash for a low pressure condition or a Comfort Alert fault. If the low pressure lockout was caused by Comfort Alert codes 4, 6 or 7, then the Comfort Alert will be flashing. If no Comfort Alert code is visible, then it is a low pressure lockout.

The following table shows the codes that will be displayed when the System Monitor (L) is connected to the F terminal of an A/TCONT802 or 803 Comfort Control.

A/TCONT802 or 803 Thermostats	
Thermostat Display Lockout Code	Lockout Description
2 Flashes	High Pressure Fault
3 Flashes	Low Pressure Fault
4 Flashes	Not Applicable
5 Flashes	Water Flow Fault
6 Flashes	Not Applicable
7 Flashes	Condensate Fault
8 Flashes	Voltage out of Range
9 Flashes	RPM Fault
10 Flashes	Comfort Alert Compressor Module Fault

Lockout code 10 - see Comfort Alert module to determine the specific flash code for compressor abnormalities.

Engineering Guide Specifications

General

The geothermal heating/cooling units shall be reverse cycle split system configuration designed for use with DX heating and cooling coils. Units shall be AHRI/ISO Standard 13256-1 performance certified and listed by a nationally recognized safety-testing laboratory or agency, such as ETL Testing Laboratory. Each unit shall be computer run-tested at the factory. Each unit shall be mounted on a pallet and stretch-wrapped.

The geothermal units shall be designed to operate with entering liquid temperature between 25°F and 110°F as manufactured by the supplier.

Casing and Cabinet

The cabinet shall be fabricated from heavy-gauge steel and finished with corrosion-resistant powder coating. The interior shall be insulated with 1/2-inch thick, multi-density, coated glass fiber.

Refrigerant Circuit

All units shall contain a sealed refrigerant circuit including a hermetic motor-compressor, thermostatic expansion valve, reversing valve, coaxial tube water-to-refrigerant heat exchanger, and service ports.

Compressors shall be high-efficiency Ultratech Scroll dual capacity type designed for heat pump duty and mounted on rubber vibration isolators. Compressor motors shall be single-phase PSC with overload protection.

The coaxial water-to-refrigerant heat exchanger shall be designed for low water pressure drop and constructed of a convoluted cupronickel inner tube and a steel outer tube. The thermostatic expansion valve shall provide proper superheat over the entire liquid temperature range with minimal "hunting".

The water-to-refrigerant heat exchanger shall be coated and refrigerant suction lines shall be insulated to prevent condensation at low liquid temperatures.

Electrical

The control shall provide operational sequencing, high- and low-pressure switch monitoring, lockout mode control, and loop pump control.

A terminal block with screw terminals will be provided for field control wiring. All units shall have knockouts for entrance of low and line voltage wiring.

Piping

Supply and return water connections shall be GeoLink swivel fittings which will connect to optional GeoLink loop pump assembly or 3-way valves. All water piping shall be insulated to prevent condensation at low liquid temperatures.

GeoStart™

GeoStart is a single phase soft starter which reduces the normal start current (LRA) by 60%. This allows the heat pump to more easily go "off grid." Using GeoStart will also provide a substantial reduction in light flicker, reduce start-up noise, and improve the compressor's start behavior. GeoStart is available as a factory option or field retrofit kit for all XL Series split units.

Options & Accessories

Thermostat (field-installed)

A multi-stage auto-changeover electronic digital thermostat shall be provided. The thermostat shall offer three heating and two cooling stages with precise temperature control. An OFF-HEAT-AUTO-COOL-EMERG system switch, OFF-AUTO fan switch, and indicating LEDs shall be provided. The thermostat shall display in °F or °C. An optional remote outdoor sensor shall be available.

Accessory Relay (field-installed)

An additional low-voltage accessory control relay shall be provided. This SPDT relay shall be capable of operation with any thermostat signal (Y1, O, L). The relay shall be located on a factory-provided mount in the unit low-voltage control wiring compartment.

Internally Mounted GeoLink Flow Center

1 or 2 pump flow center to connect to internally supplied fittings shall be available. Flush and fill fittings shall be available separately.

AHRI CERTIFIED™ www.ahridirectory.org Water Source HP ANSI/AHRI/ASHRAE/ISO13256-1

ENERGY STAR

Intertek

TRANE®

04/12

Trane
www.trane.com