22-1808-03

Product Data

4YCZ6036A through 4YCZ6060A

Single Packaged Convertible Gas/Electric
16 SEER
3, 4 & 5 Ton, 75 - 120 KBTU
R-410A

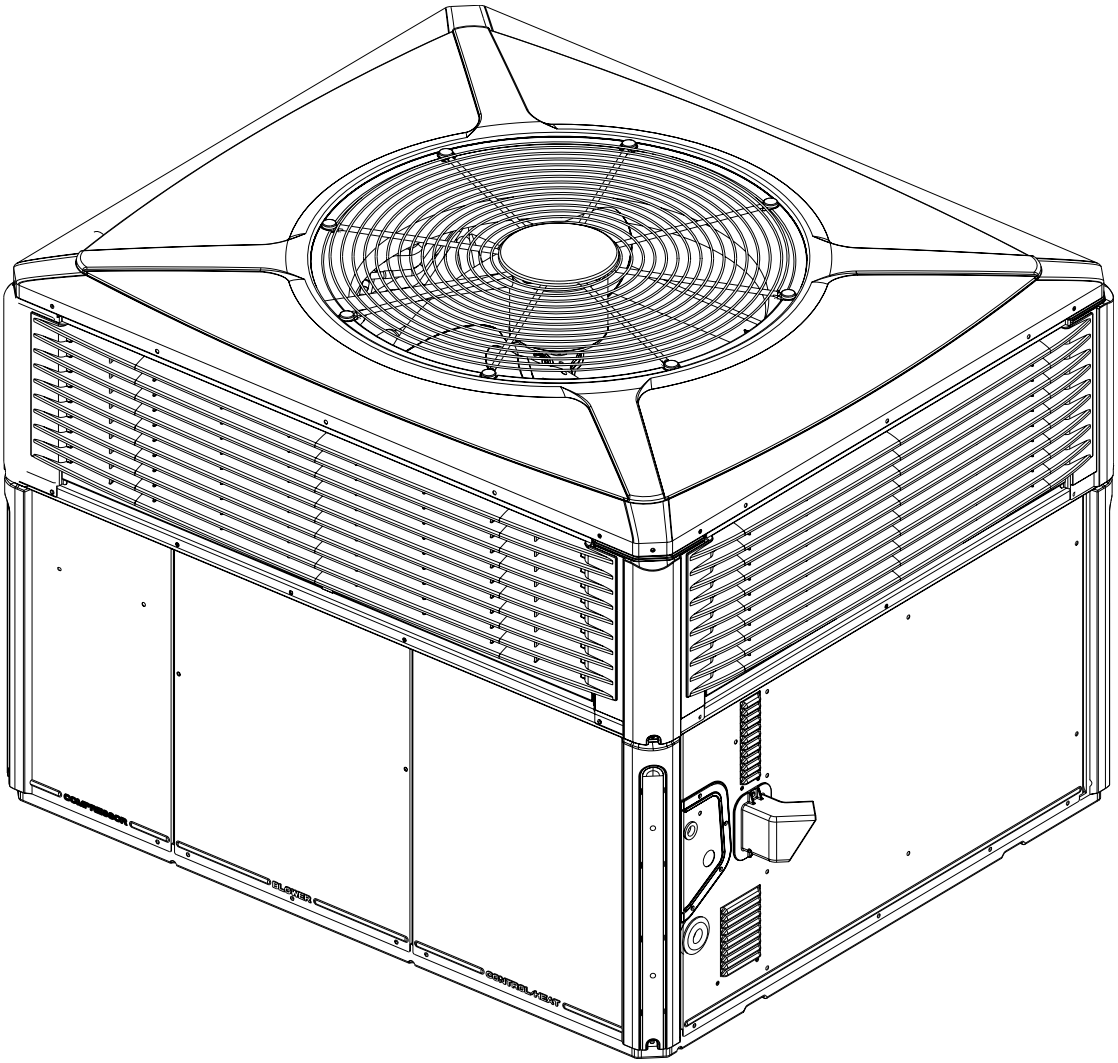

Pub. No. 22-1808-03

It's Hard to Stop a Trane.

Single Packaged Convertible Gas/Electric System

Trane offers a complete family of packaged gas/electric heating and cooling systems, designed to give you the unbeatable combination of energy efficiency and lower operating costs. In warm weather, the package gas/electric system functions as an all-electric, high efficiency air conditioner. In cold weather, it operates as a natural gas or propane gas furnace, offering you the best of both energy worlds.

Introducing the new TRANE Single Packaged Convertible Gas/Electric System.

Single Packaged Convertible Gas/ Electric Systems are easy and versatile to install. Because cooling and heating functions are all contained in a single cabinet, a Trane single package convertible gas/electric system is easy to install and service. It can be flush mounted beside your home at ground level or placed on the roof for horizontal or downflow installation. When connected to an optional Trane thermostat control and air distribution ducts, you have a highly efficient, total home comfort system.

Single Packaged Convertible Gas/ Electric Systems are unmatched in quality and reliability. All major components on these products, including the compressor, have been designed and manufactured for maximum service. Every Climatuff® two stage compressor is designed and manufactured to exacting specifications. Each design is life tested in extreme environments to ensure reliable and long lasting operation in normal applications. Each compressor has internal motor protection for added reliability.

Contents

Optional Equipment Listing

OPTIONAL EQUIPMENT FOR PACKAGED UNITS (check mark [✓] indicates accessories included)

Hinged Filter Access Door (4YCZ6036)	BAYACCDOR1A[ ]
Hinged Filter Access Door (4YCZ6048-060)	BAYACCDOR2A[ ]
Roof Curb Full Perimeter (4YCZ6036A) ③	BAYCURB050A[ ]
Roof Curb Full Perimeter (4YCZ6048-60A) ③	BAYCURB051A[ ]
Roof Curb Utility Extension Kit (BAYCURB050A)	BAYUTIL101B[ ]
Roof Curb Utility Extension Kit (BAYCURB051A)	BAYUTIL102B[ ]
Outside Air Control for V.S. Economizer (4YCZ6036A)	BAYOSAC001B[ ]
Outside Air Control for V.S. Economizer (4YCZ6048-060)	BAYOSAC002B[ ]
0-25% Motorized Outside Air Damper (4YCZ6036)	BAYDMPR101A[ ]
0-25% Motorized Outside Air Damper (4YCZ6048-060)	BAYDMPR102A[ ]
0-25% Manual Fresh Air Damper (4YCZ6036A) ①.	BAYOSAH001A[ ]
0-25% Manual Fresh Air Damper (4YCZ6048-60A) ①.	BAYOSAH002A[ ]
16" Round Duct Adapter (2 per box) (4YCZ6036A) ⑥	BAYSQRD001A[ ]
18" Round Duct Adapter (2 per box) (4YCZ6036-60A) ⑥	BAYSQRD002A[ ]
0-100% Mod Economizer w/Baro. Relief (4YCZ6036A) ①②④	BAYECON103A[ ]
0-100% Mod. Economizer w/Baro. Relief (4YCZ6048-60A) ①②④.	BAYECON104A[ ]
0-100% Horizontal Economizer (4YCZ6036A) ①② .	BAYECON203A[ ]
0-100% Horizontal Economizer (4YCZ6048-60A) ①② .	BAYECON204A[ ]
Enthalpy Control for Economizer (solid state).	BAYENTH001A[ ]
Remote Potentiometer (All-BAYECON***A)	BAYSTAT023[ ]
1"-2" Filter Frame (4YCZ6036A) (20 x 25 filter not included) ①.	BAYFLTR101B[ ]
1"-2" Filter Frame (4YCZ6048-60A) (20 x 20,20X18 filter not included) ①.	BAYFLTR201B[ ]
LP Conversion Kit (All 40K, 120K Models)	BAYLPKT100A[ ]
LP Conversion Kit (All 64K, 96K Models)	BAYLPKT101A[ ]
LP Conversion Kit (All 75K Models)	BAYLPKT102A[ ]
Evaporator Defrost Control (Low Ambient Cooling) Kit ⑤.	BAYLOAM011A[ ]
Head Pressure Control (Low Ambient Cool) (208/240v) Kit ⑤.	BAYLOAM105A[ ]
Crankcase Heater Scroll(4YCZ6036,48,60A1/3)(230v) ⑤.	BAYCCHT102A[ ]
Adapter Curb 4YCZ6036A to BAYCURB030,38	BAYADAP050A[ ]
Adapter Curb 4YCZ6036A to BAYCURB033	BAYADAP051A[ ]
Adapter Curb 4YCZ6048-060A to BAYCURB030,38	BAYADAP052A[ ]
Adapter Curb 4YCZ6048-060A to BAYCURB033	BAYADAP053A[ ]
Adapter Curb 4YCZ6048-060A to BAYCURB034	BAYADAP054A[ ]
12" Duct Shroud Covers Horizontal 4YCZ6036-060A⑦.	BAYCOVR112A[ ]
18" Duct Shroud Covers Horizontal 4YCZ6036-060A ⑦.	BAYCOVR118A[ ]
Extreme Condition Mounting Kit - All BAYCURB & BAYADAP	BAYEXMK001A[ ]
Extreme Condition Mounting Kit - All BAYUTIL	BAYEXMK002B[ ]
Extreme Condition Mounting Kit - All Slab Mounts	BAYEXMK003A[ ]
Lifting Lug Kit - All models	BAYLIFT002B[ ]

NOTES:
① Must use filter frame when economizer/fresh air kit is used.
② Dry bulb control standard with economizer.
③ Ships knocked down.
④ Downflow only.
⑤ Low Ambient cooling requires crankcase heater (BAYCCHT----A).
⑥ It is the responsibility of the installing dealer to properly size the ductwork for each specific application.
⑦ BAYCOVR112,118A will not cover BAYSQRD002A applications

General Data

MODEL	4YCZ6036A1075A	4YCZ6036A1096A	4YCZ6036A3075A
RATED Volts/PH/Hz	208-230/1/60	208-230/1/60	208-230/3/60
Performance Cooling BTUH①			
BTUH (High)	35600	35600	35600
Indoor Airflow (CFM)	1175	1175	1175
Power Input (KW)	2.93	2.93	2.93
BTUH (Low)	25200	25200	25200
Indoor Airflow (CFM)	830	830	830
Power Input (KW)	1.85	1.85	1.85
EER - HI / LOW / SEER	12.0 / 13.6 / 16.60	12.0 / 13.6 / 16.60	12 / 13.6 / 16.6
Sound Power Rating [dB(A)]⑦	70	70	70
Performance Heating②			
Input BTUH - 1st Stage (Natural Gas)	56250	72000	56250
Input BTUH - 2nd Stage (Natural Gas)	75000	96000	75000
AFUE	79.5	80.0	79.5
Temp. Rise — Min/Max (°F)	30 / 60	40 / 70	30 / 60
Orifice Qty / Drill Size (Natural Gas)③	2 / #33	3 / #37	2 / #33
POWER CONN.—V/PH/HZ	208-230/1/60	208-230/1/60	208-230/3/60
Min. Brch. Cir. Ampacity④	26.0	26.0	19.1
Fuse Size — Max./Recmd. (amps)	40 / 40	40 / 40	30 / 30
COMPRESSOR	2-STAGE SCROLL	2-STAGE SCROLL	2-STAGE SCROLL
Volts/Ph/Hz	208-230/1/60	208-230/1/60	208-230/3/60
R.L. Amps — L.R. Amps	16.7 / 82.0	16.7 / 82.0	11.2 / 58
OUTDOOR COIL — TYPE	SPINE-FIN	SPINE-FIN	SPINE-FIN
Rows/F.P.I.	2 / 24	2 / 24	2 / 24
Face Area (sq.ft.)	15.49	15.49	15.49
Tube Size (in.)	3/8	3/8	3/8
INDOOR COIL — TYPE	PLATE FIN	PLATE FIN	PLATE FIN
Rows/F.P.I.	4 / 15	4 / 15	4 / 15
Face Area (sq.ft.)	3.54	3.54	3.54
Tube Size (in.)	3/8	3/8	3/8
Refrigerant Control	EXPANSION VALVE	EXPANSION VALVE	EXPANSION VALVE
Drain Conn. Size (in.)	3/4 FEMALE NPT	3/4 FEMALE NPT	3/4 FEMALE NPT
OUTDOOR FAN — TYPE	PROPELLER	PROPELLER	PROPELLER
Dia. (in.)	23.4	23.4	23.4
Drive/No. Speeds	DIRECT / 1	DIRECT / 1	DIRECT / 1
Motor — HP/R.P.M.	1/6 / 830	1/6 / 830	1/6 / 830
Volts/Ph/Hz	208-230/1/60	208-230/1/60	208-230/1/60
F.L. Amps/L.R. Amps	0.9 / 1.65	0.9 / 1.65	0.9 / 1.65
INDOOR FAN — TYPE	CENTRIFUGAL	CENTRIFUGAL	CENTRIFUGAL
Dia x Width (in.)	10 X 10	10 X 10	10 X 10
Drive/No. Speeds	DIRECT / VARIABLE	DIRECT / VARIABLE	DIRECT / VARIABLE
CFM @ 0.0 in. w.g.⑤	SEE FAN PERFORMANCE TABLE	SEE FAN PERFORMANCE TABLE	SEE FAN PERFORMANCE TABLE
Motor — HP/R.P.M.	1/2 / VARIABLE	1/2 / VARIABLE	1/2 / VARIABLE
Volts/Ph/Hz	208-230/1/60	208-230/1/60	208-230/1/60
F.L. Amps/L.R. Amps	4.3 / 4.3	4.3 / 4.3	4.3 / 4.3
COMBUSTION FAN — TYPE	CENTRIFUGAL	CENTRIFUGAL	CENTRIFUGAL
Drive/No. Speeds	DIRECT / 2	DIRECT / 2	DIRECT / 2
Motor — HP/R.P.M.	1/45 / 2800/1500	1/45 / 2800/1500	1/45 / 2800/1500
Volts/Ph/Hz	208-230/1/60	208-230/1/60	208-230/1/60
FLA	0.34	0.34	0.34
FILTER / FURNISHED	NO	NO	NO
Type Recommended	THROWAWAY	THROWAWAY	THROWAWAY
Recmd. Face Area (sq. ft.)⑥	4.0	4.0	4.0
REFRIGERANT — Charge (lbs.)④	R410A / 6.94	R410A / 6.94	R410A / 6.94
GAS PIPE SIZE (in.)	1/2	1/2	1/2
DIMENSIONS	H X W X L	H X W X L	H X W X L
Crated (in.)	48.0 / 44.5 / 52.0	48.0 / 44.5 / 52.0	47.86 / 44.5 / 52.03
WEIGHT— Shipping (lbs.) / Net (lbs.)	488 / 392	493 / 397	488/394

① Certified in accordance with the Unitary Air-Conditioner Equipment certification program, which is based on ARI Standard 210/240.

② All models are U L Listed. Ratings shown are for elevations up to 2000 ft. For higher elevations reduce ratings at a rate of 4% per 1000 ft. elevation.

③ Convertible to LPG.

④ This value is approximate. For more precise value, see Unit Nameplate.

⑤ Based on U.S. Government Standard Tests.

⑥ Filters must be installed in return air stream. Square footages listed are based on 300 f.p.m. face velocity. If permanent filters are used size per manufacturer's recommendation with a clean resistance of 0.05" W.C.

⑦ Sound Power values are not adjusted for ARI 270-95 tonal corrections.

General Data

MODEL	4YCZ6036A3096A	4YCZ6036A4075A	4YCZ6036A4096A
RATED Volts/PH/Hz	208-230/3/60	460/3/60	460/3/60
Performance Cooling BTUH①			
BTUH (High)	35600	35600	35600
Indoor Airflow (CFM)	1175	1175	1175
Power Input (KW)	2.93	2.93	2.93
BTUH (Low)	25200	25200	25200
Indoor Airflow (CFM)	830	830	830
Power Input (KW)	1.85	1.85	1.85
EER - HI / LOW / SEER	12 / 13.6 / 16.6	12.0 / 13.6 / 16.60	12.0 / 13.6 / 16.60
Sound Power Rating [dB(A)]⑦	70	70	70
Performance Heating②			
Input BTUH - 1st Stage (Natural Gas)	72000	56250	72000
Input BTUH - 2nd Stage (Natural Gas)	96000	75000	96000
AFUE	80	79.0	80.0
Temp. Rise — Min/Max (°F)	40 / 70	30 / 60	40 / 70
Orifice Qty / Drill Size (Natural Gas)③	3 / #37	2 / #33	3 / #37
POWER CONN.—V/PH/HZ	208-230/3/60	460/3/60	460/3/60
Min. Brch. Cir. Ampacity④	19.1	10.4	10.4
Fuse Size — Max./Recmd. (amps)	30 / 30	15 / 15	15 / 15
COMPRESSOR	2-STAGE SCROLL	2-STAGE SCROLL	2-STAGE SCROLL
Volts/Ph/Hz	208-230/3/60	460/3/60	460/3/60
R.L. Amps — L.R. Amps	11.2 / 58	4.49 / 29.0	4.49 / 29.0
OUTDOOR COIL — TYPE	SPINE-FIN	SPINE-FIN	SPINE-FIN
Rows/F.P.I.	2 / 24	2 / 24	2 / 24
Face Area (sq.ft.)	15.49	15.49	15.49
Tube Size (in.)	3/8	3/8	3/8
INDOOR COIL — TYPE	PLATE FIN	PLATE FIN	PLATE FIN
Rows/F.P.I.	4 / 15	4 / 15	4 / 15
Face Area (sq.ft.)	3.54	3.54	3.54
Tube Size (in.)	3/8	3/8	3/8
Refrigerant Control	EXPANSION VALVE	EXPANSION VALVE	EXPANSION VALVE
Drain Conn. Size (in.)	3/4 FEMALE NPT	3/4 FEMALE NPT	3/4 FEMALE NPT
OUTDOOR FAN — TYPE	PROPELLER	PROPELLER	PROPELLER
Dia. (in.)	28.2	28.2	28.2
Drive/No. Speeds	DIRECT / 1	DIRECT / 1	DIRECT / 1
Motor — HP/R.P.M.	1/6 / 830	1/6 / 830	1/6 / 830
Volts/Ph/Hz	208-230/1/60	460/1/60	460/1/60
F.L. Amps/L.R. Amps	0.9 / 1.7	0.5 / 0.84	0.5 / 0.84
INDOOR FAN — TYPE	CENTRIFUGAL	CENTRIFUGAL	CENTRIFUGAL
Dia x Width (in.)	10 X 3/8	10 X 10	10 X 10
Drive/No. Speeds	DIRECT / 15	DIRECT / VARIABLE	DIRECT / VARIABLE
CFM @ 0.0 in. w.g.⑤	SEE FAN PERFORMANCE TABLE	SEE FAN PERFORMANCE TABLE	SEE FAN PERFORMANCE TABLE
Motor — HP/R.P.M.	1/2 / VARIABLE	1/2 / VARIABLE	1/2 / VARIABLE
Volts/Ph/Hz	208-230/1/60	208-230/1/60	208-230/1/60
F.L. Amps/L.R. Amps	4.3 / 4.3	4.3 / 4.3	4.3 / 4.3
COMBUSTION FAN — TYPE	CENTRIFUGAL	CENTRIFUGAL	CENTRIFUGAL
Drive/No. Speeds	DIRECT / 2	DIRECT / 2	DIRECT / 2
Motor — HP/R.P.M.	1/45 / 2800/1500	1/45 / 3460/3412	1/45 / 3460/3412
Volts/Ph/Hz	208-230/1/60	460/1/60	460/1/60
FLA	0.34	0.4	0.4
FILTER / FURNISHED	NO	NO	NO
Type Recommended	THROWAWAY	THROWAWAY	THROWAWAY
Recmd. Face Area (sq. ft.)⑥	4.0	4.0	4.0
REFRIGERANT — Charge (lbs.)④	R410A / 6.94	R410A / 6.94	R410A / 6.94
GAS PIPE SIZE (in.)	1/2	1/2	1/2
DIMENSIONS	H X W X L	H X W X L	H X W X L
Crated (in.)	47.86 / 44.5 / 52.03	48.0 / 44.5 / 52.0	48.0 / 44.5 / 52.0
WEIGHT— Shipping (lbs.) / Net (lbs.)	493 / 397	488 / 392	493 / 397

① Certified in accordance with the Unitary Air-Conditioner Equipment certification program, which is based on ARI Standard 210/240.

② All models are U L Listed. Ratings shown are for elevations up to 2000 ft. For higher elevations reduce ratings at a rate of 4% per 1000 ft. elevation.

③ Convertible to LPG.

④ This value is approximate. For more precise value, see Unit Nameplate.

⑤ Based on U.S. Government Standard Tests.

⑥ Filters must be installed in return air stream. Square footages listed are based on 300 f.p.m. face velocity. If permanent filters are used size per manufacturer's recommendation with a clean resistance of 0.05" W.C.

⑦ Sound Power values are not adjusted for ARI 270-95 tonal corrections.

General Data

MODEL	4YCZ6048A1096A	4YCZ6048A1120A	4YCZ6048A3096A
RATED Volts/PH/Hz	208-230/1/60	208-230/1/60	208-230/3/60
Performance Cooling BTUH①			
BTUH (High)	48000	48000	48000
Indoor Airflow (CFM)	1520	1520	1520
Power Input (KW)	4.0	4.0	4.0
BTUH (Low)	34800	34800	34800
Indoor Airflow (CFM)	1120	1120	1120
Power Input (KW)	2.58	2.58	2.58
EER - HI / LOW / SEER	12.0 / 13.48 / 16.00	12.0 / 13.48 / 16.00	12.0 / 13.48 / 16.00
Sound Power Rating [dB(A)]⑦	71	71	71
Performance Heating②			
Input BTUH - 1st Stage (Natural Gas)	72000	90000	72000
Input BTUH - 2nd Stage (Natural Gas)	96000	120000	96000
AFUE	80.0	80.0	80.0
Temp. Rise — Min/Max (°F)	30 / 60	40 / 70	30 / 60
Orifice Qty / Drill Size (Natural Gas)③	3 / #37	3 / #32	3 / #37
POWER CONN.—V/PH/HZ	208-230/1/60	208-230/1/60	208-230/3/60
Min. Brch. Cir. Ampacity④	34.1	34.1	24.5
Fuse Size — Max./Recmd. (amps)	50 / 50	50 / 50	35 / 35
COMPRESSOR	2-STAGE SCROLL	2-STAGE SCROLL	2-STAGE SCROLL
Volts/Ph/Hz	208-230/1/60	208-230/1/60	208-230/3/60
R.L. Amps — L.R. Amps	21.2 / 96.0	21.2 / 96.0	13.5 / 88.0
OUTDOOR COIL — TYPE	SPINE-FIN	SPINE-FIN	SPINE-FIN
Rows/F.P.I.	2 / 24	2 / 24	2 / 24
Face Area (sq.ft.)	23.57	23.57	23.57
Tube Size (in.)	3/8	3/8	3/8
INDOOR COIL — TYPE	PLATE FIN	PLATE FIN	PLATE FIN
Rows/F.P.I.	4 / 15	4 / 15	4 / 15
Face Area (sq.ft.)	5.0	5.0	5.0
Tube Size (in.)	3/8	3/8	3/8
Refrigerant Control	EXPANSION VALVE	EXPANSION VALVE	EXPANSION VALVE
Drain Conn. Size (in.)	3/4 FEMALE NPT	3/4 FEMALE NPT	3/4 FEMALE NPT
OUTDOOR FAN — TYPE	PROPELLER	PROPELLER	PROPELLER
Dia. (in.)	28.2	28.2	28.2
Drive/No. Speeds	DIRECT / 1	DIRECT / 1	DIRECT / 1
Motor — HP/R.P.M.	1/6 / 830	1/6 / 830	1/6 / 830
Volts/Ph/Hz	208-230/1/60	208-230/1/60	208-230/1/60
F.L. Amps/L.R. Amps	0.9 / 1.65	0.9 / 1.65	0.9 / 1.65
INDOOR FAN — TYPE	CENTRIFUGAL	CENTRIFUGAL	CENTRIFUGAL
Dia x Width (in.)	11 X 10	11 X 10	11 X 10
Drive/No. Speeds	DIRECT / VARIABLE	DIRECT / VARIABLE	DIRECT / VARIABLE
CFM @ 0.0 in. w.g.⑤	SEE FAN PERFORMANCE TABLE	SEE FAN PERFORMANCE TABLE	SEE FAN PERFORMANCE TABLE
Motor — HP/R.P.M.	3/4 / VARIABLE	3/4 / VARIABLE	3/4 / VARIABLE
Volts/Ph/Hz	208-230/1/60	208-230/1/60	208-230/1/60
F.L. Amps/L.R. Amps	6.8 / 6.8	6.8 / 6.8	6.8 / 6.8
COMBUSTION FAN — TYPE	CENTRIFUGAL	CENTRIFUGAL	CENTRIFUGAL
Drive/No. Speeds	DIRECT / 2	DIRECT / 2	DIRECT / 2
Motor — HP/R.P.M.	1/45 / 2800/1500	1/45 / 2800/1500	1/45 / 2800/1500
Volts/Ph/Hz	208-230/1/60	208-230/1/60	208-230/1/60
FLA	0.34	0.34	0.34
FILTER / FURNISHED	NO	NO	NO
Type Recommended	THROWAWAY	THROWAWAY	THROWAWAY
Recmd. Face Area (sq. ft.)⑥	5.3	5.3	5.3
REFRIGERANT — Charge (lbs.)④	R410A / 8.5	R410A / 8.5	R410A / 8.5
GAS PIPE SIZE (in.)	1/2	1/2	1/2
DIMENSIONS	H X W X L	H X W X L	H X W X L
Crated (in.)	52.00 / 47.0 / 62.0	52.00 / 47.0 / 62.0	52.00 / 47.0 / 62.0
WEIGHT— Shipping (lbs.) / Net (lbs.)	659 / 531	665 / 537	659 / 531

① Certified in accordance with the Unitary Air-Conditioner Equipment certification program, which is based on ARI Standard 210/240.

② All models are U L Listed. Ratings shown are for elevations up to 2000 ft. For higher elevations reduce ratings at a rate of 4% per 1000 ft. elevation.

③ Convertible to LPG.

④ This value is approximate. For more precise value, see Unit Nameplate.

⑤ Based on U.S. Government Standard Tests.

⑥ Filters must be installed in return air stream. Square footages listed are based on 300 f.p.m. face velocity. If permanent filters are used size per manufacturer's recommendation with a clean resistance of 0.05" W.C.

⑦ Sound Power values are not adjusted for ARI 270-95 tonal corrections.

General Data

MODEL	4YCZ6048A3120A	4YCZ6048A4096A	4YCZ6048A4120A
RATED Volts/PH/Hz	208-230/3/60	460/3/60	460/3/60
Performance Cooling BTUH①			
BTUH (High)	48000	48000	48000
Indoor Airflow (CFM)	1520	1520	1520
Power Input (KW)	4.0	4.0	4.0
BTUH (Low)	34800	34800	34800
Indoor Airflow (CFM)	1120	1120	1120
Power Input (KW)	2.58	2.58	2.58
EER - HI / LOW / SEER	12.0 / 13.48 / 16.00	12.0 / 13.48 / 16.00	12.0 / 13.48 / 16.00
Sound Rating No.①	71	71	71
Performance Heating②			
Input BTUH - 1st Stage (Natural Gas)⑦	90000	72000	90000
Input BTUH - 2nd Stage (Natural Gas)⑦	120000	96000	120000
AFUE	80.0	80.0	80.0
Temp. Rise — Min/Max (°F)	40 / 70	30 / 60	40 / 70
Orifice Qty / Drill Size (Natural Gas)③	3 / #32	3 / #37	3 / #32
POWER CONN.—V/PH/HZ	208-230/3/60	460/3/60	460/3/60
Min. Brch. Cir. Ampacity④	24.5	15.3	15.3
Fuse Size — Max./Recmd. (amps)	35 / 35	20 / 20	20 / 20
COMPRESSOR	2-STAGE SCROLL	2-STAGE SCROLL	2-STAGE SCROLL
Volts/Ph/Hz	208-230/3/60	460/3/60	460/3/60
R.L. Amps — L.R. Amps	13.5 / 88.0	6.41 / 41.0	6.41 / 41.0
OUTDOOR COIL — TYPE	SPINE-FIN	SPINE-FIN	SPINE-FIN
Rows/F.P.I.	2 / 24	2 / 24	2 / 24
Face Area (sq.ft.)	23.57	23.57	23.57
Tube Size (in.)	3/8	3/8	3/8
INDOOR COIL — TYPE	PLATE FIN	PLATE FIN	PLATE FIN
Rows/F.P.I.	4 / 15	4 / 15	4 / 15
Face Area (sq.ft.)	5.0	5.0	5.0
Tube Size (in.)	3/8	3/8	3/8
Refrigerant Control	EXPANSION VALVE	EXPANSION VALVE	EXPANSION VALVE
Drain Conn. Size (in.)	3/4 FEMALE NPT	3/4 FEMALE NPT	3/4 FEMALE NPT
OUTDOOR FAN — TYPE	PROPELLER	PROPELLER	PROPELLER
Dia. (in.)	28.2	28.2	28.2
Drive/No. Speeds	DIRECT / 1	DIRECT / 1	DIRECT / 1
Motor — HP/R.P.M.	1/6 / 830	1/6 / 830	1/6 / 830
Volts/Ph/Hz	208-230/1/60	460/1/60	460/1/60
F.L. Amps/L.R. Amps	0.9 / 1.65	0.5 / 0.84	0.5 / 0.84
INDOOR FAN — TYPE	CENTRIFUGAL	CENTRIFUGAL	CENTRIFUGAL
Dia x Width (in.)	11 X 10	11 X 10	11 X 10
Drive/No. Speeds	DIRECT / VARIABLE	DIRECT / VARIABLE	DIRECT / VARIABLE
CFM @ 0.0 in. w.g.⑤	SEE FAN PERFORMANCE TABLE	SEE FAN PERFORMANCE TABLE	SEE FAN PERFORMANCE TABLE
Motor — HP/R.P.M.	3/4 / VARIABLE	3/4 / VARIABLE	3/4 / VARIABLE
Volts/Ph/Hz	208-230/1/60	208-230/1/60	208-230/1/60
F.L. Amps/L.R. Amps	6.8 / 6.8	6.8 / 6.8	6.8 / 6.8
COMBUSTION FAN — TYPE	CENTRIFUGAL	CENTRIFUGAL	CENTRIFUGAL
Drive/No. Speeds	DIRECT / 2	DIRECT / 2	DIRECT / 2
Motor — HP/R.P.M.	1/45 / 2800/1500	1/45 / 3460/3412	1/45 / 3460/3412
Volts/Ph/Hz	208-230/1/60	460/1/60	460/1/60
FLA	0.34	0.4	0.4
FILTER / FURNISHED	NO	NO	NO
Type Recommended	THROWAWAY	THROWAWAY	THROWAWAY
Recmd. Face Area (sq. ft.)⑥	5.3	5.3	5.3
REFRIGERANT — Charge (lbs.)④	R410A / 8.5	R410A / 8.5	R410A / 8.5
GAS PIPE SIZE (in.)	1/2	1/2	1/2
DIMENSIONS	H X W X L	H X W X L	H X W X L
Crated (in.)	52.00 / 47.0 / 62.0	52.00 / 47.0 / 62.0	52.00 / 47.0 / 62.0
WEIGHT— Shipping (lbs.) / Net (lbs.)	665 / 537	659 / 531	665 / 537

① Certified in accordance with the Unitary Air-Conditioner Equipment certification program, which is based on ARI Standard 210/240. Noise calculated in accordance with A.R.I. Standard 270.

② All models are U L Listed. Ratings shown are for elevations up to 2000 ft. For higher elevations reduce ratings at a rate of 4% per 1000 ft. elevation.

③ Convertible to LPG.

④ This value is approximate. For more precise value, see Unit Nameplate.

⑤ Based on U.S. Government Standard Tests.

⑥ Filters must be installed in return air stream. Square footages listed are based on 300 f.p.m. face velocity. If permanent filters are used size per manufacturer's recommendation with a clean resistance of 0.05" W.C.

General Data

MODEL	4YCZ6060A1120A	4YCZ6060A3120A	4YCZ6060A4120A
RATED Volts/PH/Hz	208-230/1/60	208-230/3/60	460/3/60
Performance Cooling BTUH①			
BTUH (High)	57500	57500	57500
Indoor Airflow (CFM)	1950	1950	1950
Power Input (KW)	5.0	5.0	5.0
BTUH (Low)	40500	40500	40500
Indoor Airflow (CFM)	1325	1325	1325
Power Input (KW)	3.2	3.2	3.2
EER - HI / LOW / SEER	11.4 / 12.65 / 15.10	11.4 / 12.65 / 15.10	11.4 / 12.65 / 15.10
Sound Rating No.①	73	73	73
Performance Heating②			
Input BTUH - 1st Stage (Natural Gas)⑦	90000	90000	90000
Input BTUH - 2nd Stage (Natural Gas)⑦	120000	120000	120000
AFUE	80.0	80.0	80.0
Temp. Rise — Min/Max (°F)	30 / 60	30 / 60	30 / 60
Orifice Qty / Drill Size (Natural Gas)③	3 / #32	3 / #32	3 / #32
POWER CONN.—V/PH/HZ	208-230/1/60	208-230/3/60	460/3/60
Min. Brch. Cir. Ampacity④	37.1	30.3	19.2
Fuse Size — Max./Recmd. (amps)	60 / 60	45 / 45	25 / 25
COMPRESSOR	2-STAGE SCROLL	2-STAGE SCROLL	2-STAGE SCROLL
Volts/Ph/Hz	208-230/1/60	208-230/3/60	460/3/60
R.L. Amps — L.R. Amps	23.0 / 118.0	17.6 / 123.0	9.23 / 62.0
OUTDOOR COIL — TYPE	SPINE-FIN	SPINE-FIN	SPINE-FIN
Rows/F.P.I.	2 / 24	2 / 24	2 / 24
Face Area (sq.ft.)	23.57	23.57	23.57
Tube Size (in.)	3/8	3/8	3/8
INDOOR COIL — TYPE	PLATE FIN	PLATE FIN	PLATE FIN
Rows/F.P.I.	4 / 15	4 / 15	4 / 15
Face Area (sq.ft.)	5.0	5.0	5.0
Tube Size (in.)	3/8	3/8	3/8
Refrigerant Control	EXPANSION VALVE	EXPANSION VALVE	EXPANSION VALVE
Drain Conn. Size (in.)	3/4 FEMALE NPT	3/4 FEMALE NPT	3/4 FEMALE NPT
OUTDOOR FAN — TYPE	PROPELLER	PROPELLER	PROPELLER
Dia. (in.)	28.2	28.2	28.2
Drive/No. Speeds	DIRECT / 1	DIRECT / 1	DIRECT / 1
Motor — HP/R.P.M.	1/4 / 830	1/4 / 830	1/4 / 830
Volts/Ph/Hz	208-230/1/60	208-230/1/60	460/1/60
F.L. Amps/L.R. Amps	1.4 / 3.37	1.4 / 3.37	0.7 / 1.68
INDOOR FAN — TYPE	CENTRIFUGAL	CENTRIFUGAL	CENTRIFUGAL
Dia x Width (in.)	11 X 10	11 X 10	11 X 10
Drive/No. Speeds	DIRECT / VARIABLE	DIRECT / VARIABLE	DIRECT / VARIABLE
CFM @ 0.0 in. w.g.⑤	SEE FAN PERFORMANCE TABLE	SEE FAN PERFORMANCE TABLE	SEE FAN PERFORMANCE TABLE
Motor — HP/R.P.M.	1 / VARIABLE	1 / VARIABLE	1 / VARIABLE
Volts/Ph/Hz	208-230/1/60	208-230/1/60	208-230/1/60
F.L. Amps/L.R. Amps	6.9 / 6.9	6.9 / 6.9	6.9 / 6.9
COMBUSTION FAN — TYPE	CENTRIFUGAL	CENTRIFUGAL	CENTRIFUGAL
Drive/No. Speeds	DIRECT / 2	DIRECT / 2	DIRECT / 2
Motor — HP/R.P.M.	1/45 / 2800/1500	1/45 / 2800/1500	1/45 / 3460/3412
Volts/Ph/Hz	208-230/1/60	208-230/1/60	460/1/60
FLA	0.34	0.34	0.4
FILTER / FURNISHED	NO	NO	NO
Type Recommended	THROWAWAY	THROWAWAY	THROWAWAY
Recmd. Face Area (sq. ft.)⑥	6.7	6.7	6.7
REFRIGERANT — Charge (lbs.)④	R410A / 9.0	R410A / 9.0	R410A / 9.0
GAS PIPE SIZE (in.)	1/2	1/2	1/2
DIMENSIONS	H X W X L	H X W X L	H X W X L
Crated (in.)	52.00 / 47.0 / 62.0	52.00 / 47.0 / 62.0	52.00 / 47.0 / 62.0
WEIGHT— Shipping (lbs.) / Net (lbs.)	676 / 548	676 / 548	676 / 548

① Certified in accordance with the Unitary Air-Conditioner Equipment certification program, which is based on ARI Standard 210/240. Noise calculated in accordance with A.R.I. Standard 270.

② All models are U L Listed. Ratings shown are for elevations up to 2000 ft. For higher elevations reduce ratings at a rate of 4% per 1000 ft. elevation.

③ Convertible to LPG.

④ This value is approximate. For more precise value, see Unit Nameplate.

⑤ Based on U.S. Government Standard Tests.

⑥ Filters must be installed in return air stream. Square footages listed are based on 300 f.p.m. face velocity. If permanent filters are used size per manufacturer's recommendation with a clean resistance of 0.05" W.C.

Performance Data Cooling

HIGH STAGE: 4YCZ6036A AT 1200 NOM CFM (COOLING PERFORMANCE AT INDOOR DRY BULB TEMPERATURES)

OD AMB	ID WB	TOT CAP	SENS CAP AT ENTERING DB TEMP 72	75	78	80	TOTAL KW
85	59	33.9	28.7	32.4	33.9	33.9	2.7
	63	35.3	23.2	26.9	30.5	33.0	2.7
	67	38.1	18.2	21.9	25.5	27.9	2.7
	71	41.1	13.2	16.8	20.4	22.9	2.7
95	59	31.8	27.8	31.4	31.8	31.8	2.9
	63	33.2	22.4	26.0	29.6	32.0	2.9
	67	35.7	17.3	21.0	24.6	27.0	3.0
	71	38.6	12.3	15.9	19.6	22.0	3.0
105	59	29.7	26.9	29.7	29.7	29.7	3.2
	63	31.0	21.5	25.1	28.7	31.0	3.2
	67	33.4	16.5	20.1	23.8	26.2	3.2
	71	36.1	11.4	15.1	18.7	21.1	3.2
115	59	27.7	26.0	27.7	27.7	27.7	3.4
	63	28.8	20.6	24.3	27.9	28.8	3.4
	67	31.1	15.6	19.2	22.9	25.3	3.5
	71	33.6	10.6	14.2	17.9	20.3	3.5

USE THE FOLLOWING FACTORS TO COMPENSATE FOR DIFFERENT AIR FLOW

	AIR FLOW RATE, CFM	CAPACITY MULTIPLIER	TOTAL POWER MULTIPLIER
LOW	1050	0.97	0.98
HIGH	1350	1.03	1.02

ARI RATING FOR COOLING

CFM	CAPACITY (A) TEST	SEER	EER
1175	35600	16.60	12.00

ARI Standard Capacity Rating Conditions

ARI STANDARD 210/240 RATING CONDITIONS — (A) Cooling 80°F DB, 67°F WB air entering indoor coil, 95°F DB air entering outdoor coil. (B) High Temperature Heating 47°F DB, 43°F WB air entering outdoor coil, 70°F DB air entering indoor coil. (C) Low Temperature Heating 17°F DB, 15°F WB air entering outdoor coil, 70°F DB air entering indoor coil. (D) Rated indoor airflow for heating is the same as for cooling.

LOW STAGE: 4YCZ6036A AT 900 NOM CFM (COOLING PERFORMANCE AT INDOOR DRY BULB TEMPERATURES)

OD AMB	ID WB	TOT CAP	SENS CAP AT ENTERING DB TEMP 72	75	78	80	TOTAL KW
75	59	25.3	21.5	24.1	25.3	25.3	1.3
	63	26.3	17.4	20.1	22.8	24.6	1.3
	67	28.4	13.7	16.4	19.1	20.9	1.3
	71	30.6	10.0	12.7	15.4	17.2	1.3
85	59	23.4	20.6	23.3	23.4	23.4	1.5
	63	24.4	16.6	19.3	22.0	23.8	1.5
	67	26.3	13.0	15.7	18.3	20.1	1.5
	71	28.4	9.3	12.0	14.6	16.4	1.5
90	59	22.5	20.2	22.5	22.5	22.5	1.6
	63	23.4	16.3	19.0	21.6	23.4	1.6
	67	25.3	12.6	15.3	17.9	19.7	1.7
	71	27.3	8.9	11.6	14.2	16.0	1.7
95	59	21.6	19.8	21.6	21.6	21.6	1.7
	63	22.5	15.9	18.6	21.2	22.5	1.7
	67	24.2	12.2	14.9	17.6	19.3	1.8
	71	26.1	8.5	11.2	13.9	15.6	1.8

USE THE FOLLOWING FACTORS TO COMPENSATE FOR DIFFERENT AIR FLOW

	AIR FLOW RATE, CFM	CAPACITY MULTIPLIER	TOTAL POWER MULTIPLIER
LOW	790	0.97	0.98
HIGH	1010	1.03	1.02

ARI RATING FOR COOLING

CFM	CAPACITY (A) TEST	SEER	EER
830	25286	16.60	13.62

ARI Standard Capacity Rating Conditions

ARI STANDARD 210/240 RATING CONDITIONS — (A) Cooling 80°F DB, 67°F WB air entering indoor coil, 95°F DB air entering outdoor coil. (B) High Temperature Heating 47°F DB, 43°F WB air entering outdoor coil, 70°F DB air entering indoor coil. (C) Low Temperature Heating 17°F DB, 15°F WB air entering outdoor coil, 70°F DB air entering indoor coil. (D) Rated indoor airflow for heating is the same as for cooling.

HIGH STAGE: 4YCZ6048A AT 1600 NOM CFM (COOLING PERFORMANCE AT INDOOR DRY BULB TEMPERATURES)

OD AMB	ID WB	TOT CAP	SENS CAP AT ENTERING DB TEMP 72	75	78	80	TOTAL KW
85	59	45.8	38.6	43.4	45.8	45.8	3.6
	63	47.7	31.3	36.1	41.0	44.2	3.6
	67	51.4	24.6	29.4	34.2	37.5	3.7
	71	55.5	17.8	22.7	27.5	30.8	3.7
95	59	43.0	37.3	42.2	43.0	43.0	3.9
	63	44.9	30.1	35.0	39.8	43.0	3.9
	67	48.3	23.4	28.3	33.1	36.3	4.0
	71	52.2	16.7	21.5	26.4	29.6	4.0
105	59	40.3	36.1	40.3	40.3	40.3	4.2
	63	42.0	28.9	33.8	38.6	41.9	4.3
	67	45.3	22.2	27.1	31.9	35.2	4.3
	71	48.9	15.6	20.4	25.3	28.5	4.3
115	59	37.5	34.9	37.5	37.5	37.5	4.6
	63	39.1	27.8	32.6	37.5	39.1	4.6
	67	42.2	21.1	26.0	30.8	34.0	4.7
	71	45.5	14.4	19.3	24.1	27.4	4.7

USE THE FOLLOWING FACTORS TO COMPENSATE FOR DIFFERENT AIR FLOW

	AIR FLOW RATE, CFM	CAPACITY MULTIPLIER	TOTAL POWER MULTIPLIER
LOW	1400	0.97	0.98
HIGH	1800	1.03	1.02

ARI RATING FOR COOLING

CFM	CAPACITY (A) TEST	SEER	EER
1540	48000	16.00	12.00

ARI Standard Capacity Rating Conditions

ARI STANDARD 210/240 RATING CONDITIONS — (A) Cooling 80°F DB, 67°F WB air entering indoor coil, 95°F DB air entering outdoor coil. (B) High Temperature Heating 47°F DB, 43°F WB air entering outdoor coil, 70°F DB air entering indoor coil. (C) Low Temperature Heating 17°F DB, 15°F WB air entering outdoor coil, 70°F DB air entering indoor coil. (D) Rated indoor airflow for heating is the same as for cooling.

Performance Data Cooling

LOW STAGE: 4YCZ6048A AT 1200 NOM CFM (COOLING PERFORMANCE AT INDOOR DRY BULB TEMPERATURES)

OD AMB	ID WB	TOT CAP	SENS CAP AT ENTERING DB TEMP 72	75	78	80	TOTAL KW
75	59	34.4	29.3	32.9	34.4	34.4	1.8
	63	35.9	23.8	27.4	31.1	33.5	1.8
	67	38.7	18.8	22.4	26.0	28.5	1.9
	71	41.7	13.7	17.4	21.0	23.4	1.9
85	59	32.1	28.2	31.8	32.1	32.1	2.1
	63	33.5	22.8	26.4	30.1	32.5	2.1
	67	36.1	17.8	21.4	25.1	27.5	2.2
	71	38.9	12.8	16.4	20.0	22.5	2.2
90	59	31.0	27.7	31.0	31.0	31.0	2.3
	63	32.3	22.3	25.9	29.6	32.0	2.3
	67	34.8	17.3	21.0	24.6	27.0	2.3
	71	37.5	12.3	15.9	19.6	22.0	2.3
95	59	29.8	27.2	29.8	29.8	29.8	2.4
	63	31.1	21.8	25.4	29.1	31.1	2.4
	67	33.5	16.9	20.5	24.1	26.5	2.5
	71	36.1	11.8	15.5	19.1	21.5	2.5

USE THE FOLLOWING FACTORS TO COMPENSATE FOR DIFFERENT AIR FLOW

	AIR FLOW RATE, CFM	CAPACITY MULTIPLIER	TOTAL POWER MULTIPLIER
LOW	1050	0.97	0.98
HIGH	1350	1.03	1.02

ARI RATING FOR COOLING

CFM	CAPACITY (A) TEST	SEER	EER
1120	34866	16.00	13.53

ARI Standard Capacity Rating Conditions

ARI STANDARD 210/240 RATING CONDITIONS — (A) Cooling 80°F DB, 67°F WB air entering indoor coil, 95°F DB air entering outdoor coil. (B) High Temperature Heating 47°F DB, 43°F WB air entering outdoor coil, 70°F DB air entering indoor coil. (C) Low Temperature Heating 17°F DB, 15°F WB air entering outdoor coil, 70°F DB air entering indoor coil. (D) Rated indoor airflow for heating is the same as for cooling.

HIGH STAGE: 4YCZ6060A AT 2000 NOM CFM (COOLING PERFORMANCE AT INDOOR DRY BULB TEMPERATURES)

OD AMB	ID WB	TOT CAP	SENS CAP AT ENTERING DB TEMP 72	75	78	80	TOTAL KW
85	59	54.7	47.2	53.4	54.7	54.7	4.5
	63	57.0	37.9	44.1	50.3	54.4	4.5
	67	61.4	29.4	35.6	41.7	45.9	4.6
	71	66.3	20.8	27.0	33.2	37.3	4.6
95	59	51.5	45.8	51.5	51.5	51.5	4.9
	63	53.7	36.6	42.8	48.9	53.0	5.0
	67	57.8	28.1	34.3	40.4	44.5	5.1
	71	62.4	19.5	25.7	31.9	36.0	5.1
105	59	48.3	44.4	48.3	48.3	48.3	5.4
	63	50.3	35.3	41.5	47.6	50.3	5.4
	67	54.2	26.7	32.9	39.1	43.2	5.5
	71	58.6	18.2	24.3	30.5	34.6	5.5
115	59	45.1	43.0	45.1	45.1	45.1	5.8
	63	47.0	33.9	40.1	46.2	47.0	5.9
	67	50.7	25.4	31.6	37.8	41.9	6.0
	71	54.7	16.9	23.1	29.3	33.4	6.0

USE THE FOLLOWING FACTORS TO COMPENSATE FOR DIFFERENT AIR FLOW

	AIR FLOW RATE, CFM	CAPACITY MULTIPLIER	TOTAL POWER MULTIPLIER
LOW	1750	0.97	0.98
HIGH	2250	1.03	1.02

ARI RATING FOR COOLING

CFM	CAPACITY (A) TEST	SEER	EER
1940	57500	15.10	11.40

ARI Standard Capacity Rating Conditions

ARI STANDARD 210/240 RATING CONDITIONS — (A) Cooling 80°F DB, 67°F WB air entering indoor coil, 95°F DB air entering outdoor coil. (B) High Temperature Heating 47°F DB, 43°F WB air entering outdoor coil, 70°F DB air entering indoor coil. (C) Low Temperature Heating 17°F DB, 15°F WB air entering outdoor coil, 70°F DB air entering indoor coil. (D) Rated indoor airflow for heating is the same as for cooling.

LOW STAGE: 4YCZ6060A AT 1500 NOM CFM (COOLING PERFORMANCE AT INDOOR DRY BULB TEMPERATURES)

OD AMB	ID WB	TOT CAP	SENS CAP AT ENTERING DB TEMP 72	75	78	80	TOTAL KW
75	59	40.3	35.6	40.2	40.3	40.3	2.3
	63	42.1	28.7	33.4	38.0	41.0	2.3
	67	45.3	22.4	27.0	31.6	34.7	2.3
	71	48.9	16.0	20.6	25.3	28.3	2.3
85	59	37.6	34.4	37.6	37.6	37.6	2.6
	63	39.2	27.6	32.2	36.8	39.2	2.6
	67	42.3	21.3	25.9	30.5	33.6	2.7
	71	45.6	14.9	19.5	24.1	27.2	2.7
90	59	36.3	33.8	36.3	36.3	36.3	2.8
	63	37.8	27.0	31.7	36.2	37.8	2.8
	67	40.7	20.7	25.3	29.9	33.0	2.9
	71	44.0	14.3	19.0	23.6	26.7	2.9
95	59	34.9	33.3	34.9	34.9	34.9	3.0
	63	36.4	26.5	31.1	35.7	36.4	3.0
	67	39.2	20.1	24.8	29.4	32.5	3.1
	71	42.3	13.8	18.4	23.0	26.1	3.1

USE THE FOLLOWING FACTORS TO COMPENSATE FOR DIFFERENT AIR FLOW

	AIR FLOW RATE, CFM	CAPACITY MULTIPLIER	TOTAL POWER MULTIPLIER
LOW	1310	0.97	0.98
HIGH	1680	1.03	1.02

ARI RATING FOR COOLING

CFM	CAPACITY (A) TEST	SEER	EER
1330	40894	15.10	12.68

ARI Standard Capacity Rating Conditions

ARI STANDARD 210/240 RATING CONDITIONS — (A) Cooling 80°F DB, 67°F WB air entering indoor coil, 95°F DB air entering outdoor coil. (B) High Temperature Heating 47°F DB, 43°F WB air entering outdoor coil, 70°F DB air entering indoor coil. (C) Low Temperature Heating 17°F DB, 15°F WB air entering outdoor coil, 70°F DB air entering indoor coil. (D) Rated indoor airflow for heating is the same as for cooling.

Indoor Blower Performance

Indoor Fan Performance 4YCZ6036A

Horizontal		External Static Pressure (in. wg)										
		0	0.1	0.2	0.3	0.4	0.5	0.6	0.7	0.8	0.9	1
350 CFM/Ton Setting	Low	-	741	743	744	744	743	742	740	737	-	-
	High	-	1059	1062	1063	1063	1062	1059	1057	1053	-	-
400 CFM/Ton Setting	Low	-	825	837	843	844	844	842	839	836	-	-
	High	-	1179	1196	1204	1206	1205	1203	1199	1194	-	-
450 CFM/Ton Setting	Low	-	976	964	959	957	953	949	945	945	-	-
	High	-	1394	1377	1371	1367	1362	1355	1350	1350	-	-

Down Flow		External Static Pressure (in. wg)										
		0	0.1	0.2	0.3	0.4	0.5	0.6	0.7	0.8	0.9	1
350 CFM/Ton Setting	Low	-	722	745	747	744	742	743	744	736	-	-
	High	-	1032	1064	1068	1063	1060	1062	1063	1052	-	-
400 CFM/Ton Setting	Low	-	830	841	842	840	839	838	836	828	-	-
	High	-	1186	1201	1203	1201	1198	1197	1194	1184	-	-
450 CFM/Ton Setting	Low	-	978	965	964	963	958	948	941	949	-	-
	High	-	1397	1378	1377	1376	1368	1354	1344	1356	-	-

Indoor Fan Performance 4YCZ6048A

Horizontal		External Static Pressure (in. wg)										
		0.0	0.1	0.2	0.3	0.4	0.5	0.6	0.7	0.8	0.9	1.0
350 CFM/Ton Setting	Low	-	954	973	977	973	966	957	950	944	-	-
	High	-	1363	1390	1396	1390	1379	1368	1358	1349	-	-
400 CFM/Ton Setting	Low	-	1121	1106	1104	1106	1108	1108	1104	1097	-	-
	High	-	1601	1580	1577	1580	1583	1583	1577	1567	-	-
450 CFM/Ton Setting	Low	-	1223	1254	1268	1271	1268	1264	1261	1258	-	-
	High	-	1747	1792	1811	1816	1812	1806	1801	1797	-	-

Down Flow		External Static Pressure (in. wg)										
		0.0	0.1	0.2	0.3	0.4	0.5	0.6	0.7	0.8	0.9	1.0
350 CFM/Ton Setting	Low	-	948	977	977	970	969	975	979	962	-	-
	High	-	1354	1396	1396	1386	1384	1393	1399	1375	-	-
400 CFM/Ton Setting	Low	-	1102	1106	1109	1113	1116	1119	1120	1118	-	-
	High	-	1574	1580	1585	1589	1594	1599	1601	1597	-	-
450 CFM/Ton Setting	Low	-	1295	1277	1272	1273	1274	1273	1272	1273	-	-
	High	-	1851	1824	1817	1818	1820	1819	1817	1819	-	-

Indoor Fan Performance 4YCZ6060A

Horizontal		External Static Pressure (in. wg)										
		0.0	0.1	0.2	0.3	0.4	0.5	0.6	0.7	0.8	0.9	1.0
350 CFM/Ton Setting	Low		1163	1238	1259	1256	1246	1240	1237	1230		
	High	-	1662	1768	1799	1794	1780	1771	1767	1757	-	-
400 CFM/Ton Setting	Low		1443	1427	1422	1422	1423	1422	1418	1410		
	High	-	2062	2038	2031	2032	2034	2032	2025	2015	-	-

Down Flow		External Static Pressure (in. wg)										
		0.0	0.1	0.2	0.3	0.4	0.5	0.6	0.7	0.8	0.9	1.0
350 CFM/Ton Setting	Low	-	1259	1219	1208	1207	1206	1199	1188	1185	-	-
	High	-	1799	1742	1726	1725	1723	1712	1698	1692	-	-
400 CFM/Ton Setting	Low	-	1410	1393	1386	1384	1383	1380	1368	1344	-	-
	High	-	2015	1990	1980	1977	1976	1971	1955	1920	-	-

Indoor Blower Performance

Heating Airflow, horizontal or downflow from .2 to .6” wg.

4YCZ6036A*075				
Switch Settings		Selection	Nominal Airflow	
			Low Stage	High Stage
7-OFF	8-OFF	A	725	1000
7-ON	8-OFF	B	775	1075
7-OFF	8-ON	C	850	1150
7-ON	8-ON	D	925	1250

* can be 1, 3 or 4

4YCZ6036A*096				
Switch Settings		Selection	Nominal Airflow	
			Low Stage	High Stage
7-OFF	8-OFF	A	825	1100
7-ON	8-OFF	B	875	1175
7-OFF	8-ON	C	950	1275
7-ON	8-ON	D	1025	1375

* can be 1, 3 or 4

4YCZ6048A*096				
Switch Settings		Selection	Nominal Airflow	
			Low Stage	High Stage
7-OFF	8-OFF	A	1075	1375
7-ON	8-OFF	B	1100	1450
7-OFF	8-ON	C	1150	1500
7-ON	8-ON	D	1200	1575

* can be 1, 3 or 4

4YCZ6048A*120				
Switch Settings		Selection	Nominal Airflow	
			Low Stage	High Stage
7-OFF	8-OFF	A	1050	1500
7-ON	8-OFF	B	1100	1575
7-OFF	8-ON	C	1150	1625
7-ON	8-ON	D	1200	1700

* can be 1, 3 or 4

4YCZ6060*120A				
Switch Settings		Selection	Nominal Airflow	
			Low Stage	High Stage
7-OFF	8-OFF	A	1375	1800
7-ON	8-OFF	B	1450	1900
7-OFF	8-ON	C	1525	1975
7-ON	8-ON	D	1575	2075

* can be 1, 3 or 4

Typical Field Wiring

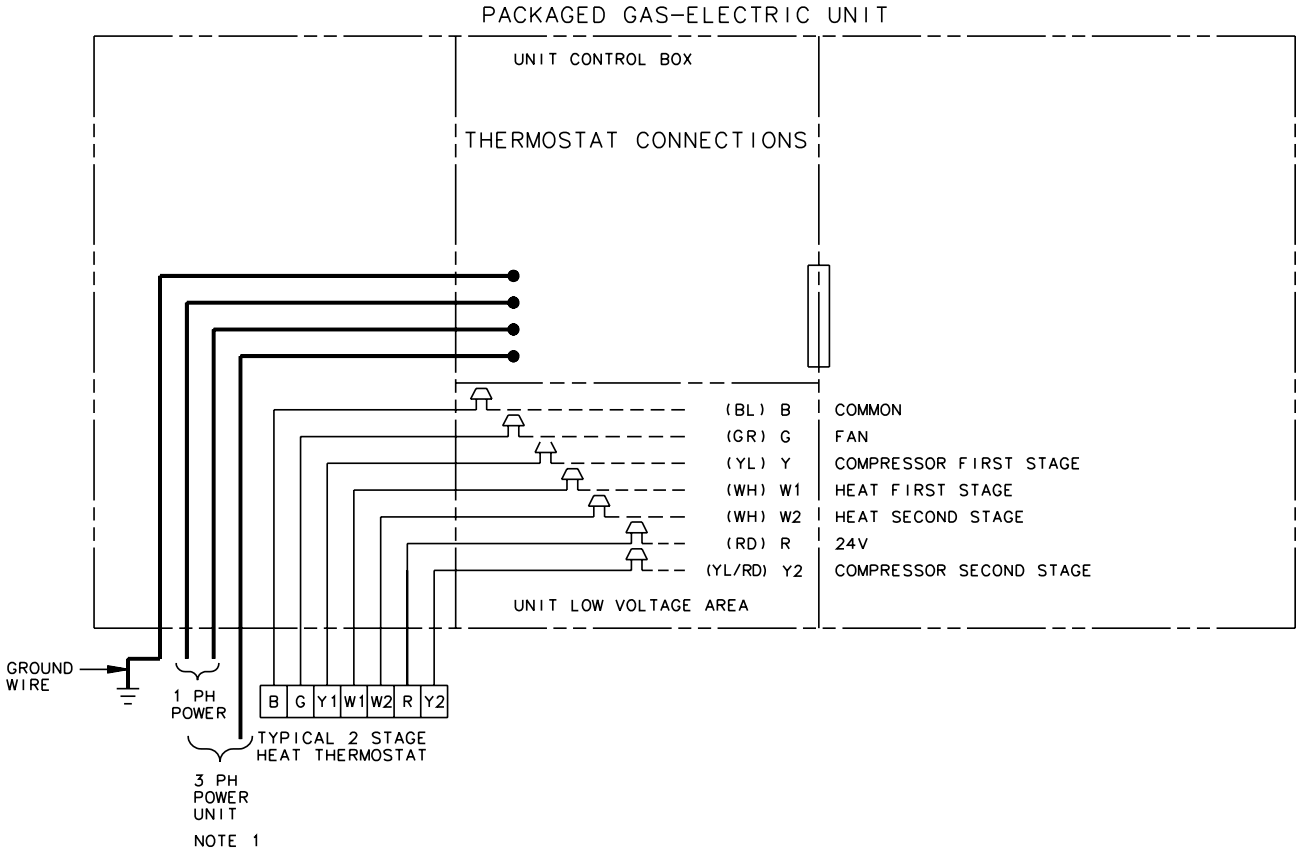

NOTES:

1. FUSED DISCONNECT SIZE, POWER WIRING AND GROUNDING OF EQUIPMENT MUST COMPLY WITH CODES.
2. BE SURE POWER SUPPLY AGREES WITH EQUIPMENT AND HEATER NAMEPLATE.
3. LOW VOLTAGE WIRING TO BE 18 AWG MINIMUM CONDUCTOR.
4. SEE UNIT DIAGRAM FOR ELECTRICAL CONNECTION DETAILS.
5. THE THERMOSTAT ON THE GAS/ELECTRIC UNIT MUST PROVIDE A 'G' SIGNAL IN THE COOLING MODE ONLY. DURING THE HEATING MODE THE FAN WILL BE ENERGIZED BY THE SYSTEM.
6. FOR SINGLE STAGE THERMOSTATS JUMPER W1 AND W2 TOGETHER. SECOND STAGE HEAT WILL BEGIN 10 MINUTES AFTER FIRST STAGE.

INTER-COMPONENT WIRING

- - - - - - - - 24V. } FACTORY
- - - - - - - - LINE V. } WIRING

———————— 24V. } FIELD
———————— LINE V. } WIRING

WIRE COLOR DESIGNATION			
ABBR	COLOR	ABBR	COLOR
BK	BLACK	PR	PURPLE
BL	BLUE	RD	RED
BR	BROWN	WH	WHITE
GR	GREEN	YL	YELLOW
OR	ORANGE		

Typical Wiring

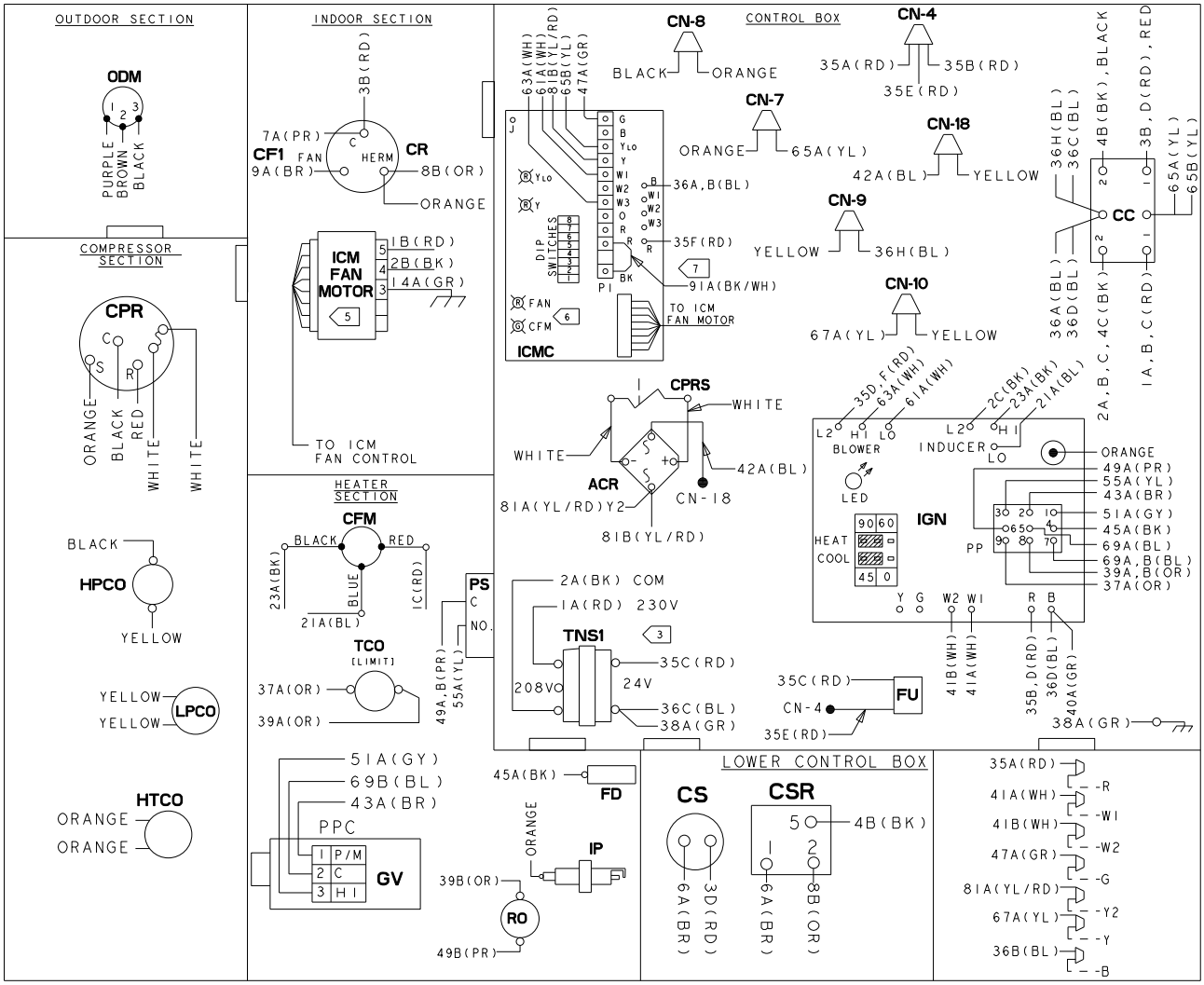

NOTES:

1. CONNECTIONS SHOWN ARE FOR A TYPICAL THERMOSTAT. SEE SCHEMATIC SUPPLIED WITH THERMOSTAT FOR PROPER CONNECTIONS.LOW VOLTAGE WIRING TO UNIT MAY BE NEC CLASS 2 AND MUST BE A MIN. OF 18 A.W.G. SET THERMOSTAT HEAT ANTICIPATOR TO .3 AMPS.
2. MAXIMUM ADDITIONAL EXTERNAL LOAD (PILOT DUTY) BETWEEN "B" AND "R" OF 0.5 AMPS, 24 VAC IS AVAILABLE IN THE COOLING MODE ONLY.
3. FOR 208 VOLT OPERATION MAKE THE FOLLOWING WIRING CHANGES:
   A: AT TNSI REMOVE 1A(RD) WIRE AND CONNECT TO 208V TERMINAL ON TRANSFORMER.
4. IF ANY OF THE ORIGINAL WIRE AS SUPPLIED IN THIS UNIT MUST BE REPLACED, REPLACE IT WITH APPLIANCE WIRING MAT'L RATED AT 105° C.
5. "T" TERMINAL IS NOT CONNECTED WHEN AN ELECTRONIC THERMOSTAT IS USED.
6. THE GREEN LED ON THE ICMC BOARD FLASHES ONCE PER HUNDRED CFM.
7. IF OPTIONAL HUMIDISTAT ACCESSORY IS USED, ON THE ICMC BOARD CUT THE 91A(BK/WH) JUMPER AND CONNECT THE HUMIDISTAT BETWEEN TERMINALS.

WIRE COLOR DESIGNATION			
ABBR	COLOR	ABBR	COLOR
BK	BLACK	PR	PURPLE
BL	BLUE	RD	RED
BR	BROWN	WH	WHITE
GR	GREEN	YL	YELLOW
OR	ORANGE		

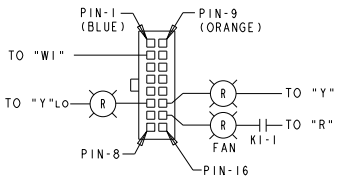

VIEW A-A

DETAIL OF POLARIZED PLUG CONNECTIONS TO LED LIGHTS

D757694P02

ICMC DIP SWITCH SETTINGS

DIP SWITCH SETTINGS				COOLING/ HEAT PUMP CFM	NOMINAL AIRFLOW
SW 1	SW 2	SW 3	SW 4		
OFF	OFF	OFF	ON	350 CFM/TON	
OFF	OFF	OFF	OFF	400 CFM/TON	**
OFF	OFF	ON	OFF	450 CFM/TON	
				FAN OFF-DELAY OPTIONS	
	SW 5	SW 6			
	OFF	OFF		NONE	NOMINAL
	ON	OFF		60 SECONDS	100% NOMINAL**
	OFF	ON		90 SECONDS	50 % NOMINAL
	ON	ON		ENHANCED	ENHANCED
				ELECTRIC HEAT AIRFLOW	
	SW 7	SW 8			
	OFF	OFF		350 CFM/TON	
	ON	OFF		400 CFM/TON	**

** FACTORY SETTING.

AT CONTINUOUS FAN SETTING ("G" ONLY) AIRFLOW VALUES ARE APPROXIMATELY 50% OF LISTED VALUE.

THE HEAT PUMP FAN OFF-DELAY IS THE SAME AS THE COOLING MODE.

DEVICE	DESCRIPTION	LINE
CC	COMPRESSOR CONTACTOR COIL	50
CF1	OUTDOOR FAN CAPACITOR	15
CN	CONNECTOR OR WIRE NUT	
CFM	COMBUSTION FAN MOTOR	24
CPR	COMPRESSOR	14
CR	COMPRESSOR RUN CAPACITOR	14
CS	COMPRESSOR START CAPACITOR	10
CSR	COMPRESSOR START RELAY COIL	10
FD	FLAME DETECTOR	37
RO	ROLLOUT LIMIT	34
GV	GAS VALVE	31
IDM	INDOOR FAN MOTOR	21
IGN	IGNITION CONTROL MODULE	23,37
IOL	INTERNAL OVERLOAD	14
IP	IGNITOR PROBE	38
LED	IGN DIAGNOSTICS INDICATOR	34
ODM	OUTDOOR FAN MOTOR	17
PP	POLARIZED PLUG	31-37
PS	PRESSURE SWITCH	34
TCO	TEMPERATURE LIMIT SWITCH	34
TNS1	CONTROL POWER TRANSFORMER	28
FU	FUSE	33
HPCO	HIGH PRESSURE SWITCH	50
LPCO	LOW PRESSURE SWITCH	49
HTCO	HIGH TEMPERATURE SWITCH	50
CPRS	COMPRESSOR SOLENOID	46
ICMC	INTEGRATED MOTOR CONTROL	40-47
ACR	RECTIFIER BRIDGE	49

Typical Wiring

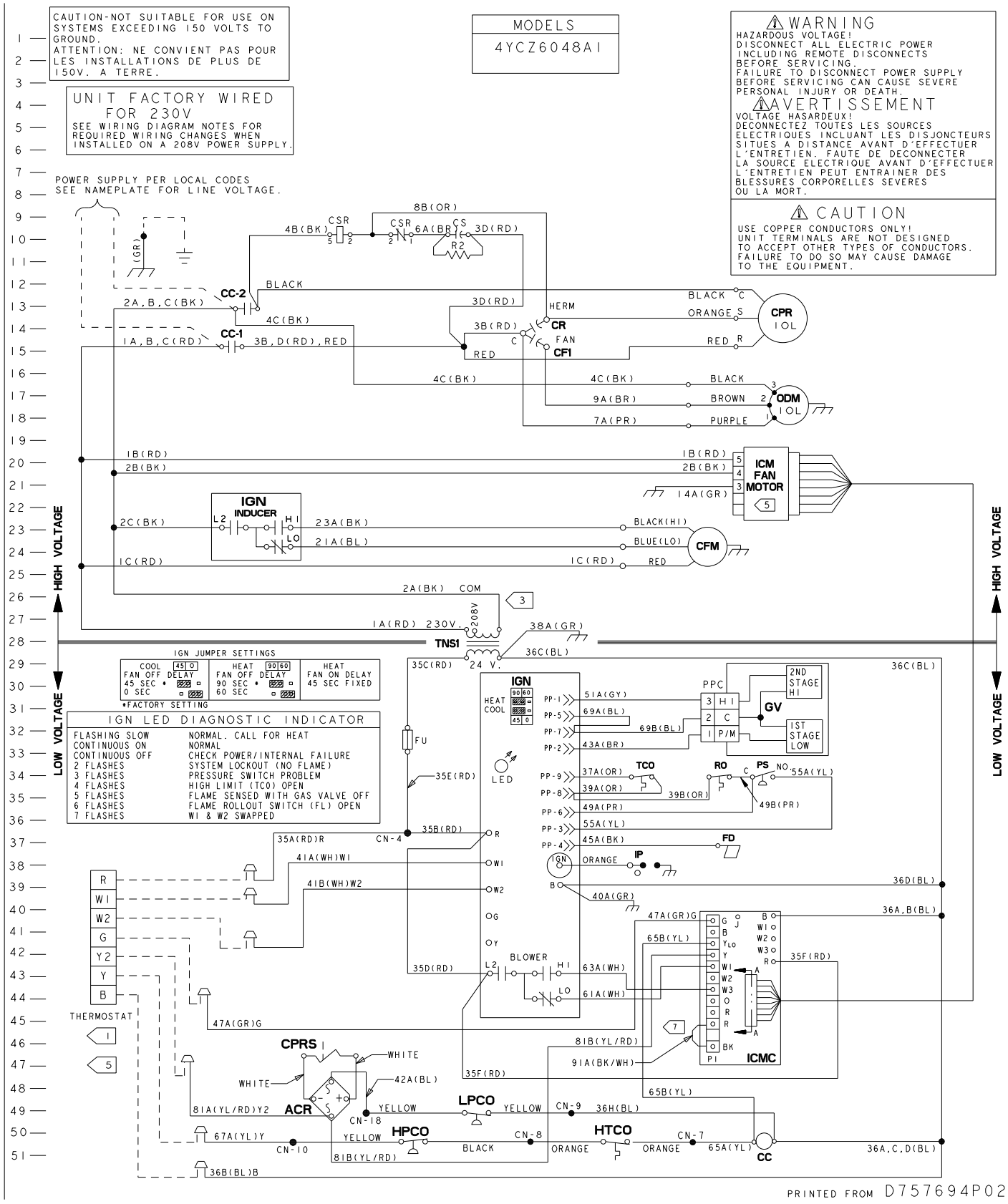

Optional Equipment

BAYCURB050A FULL PERIMETER ROOF MOUNTING CURB FOR 4YCZ6036A

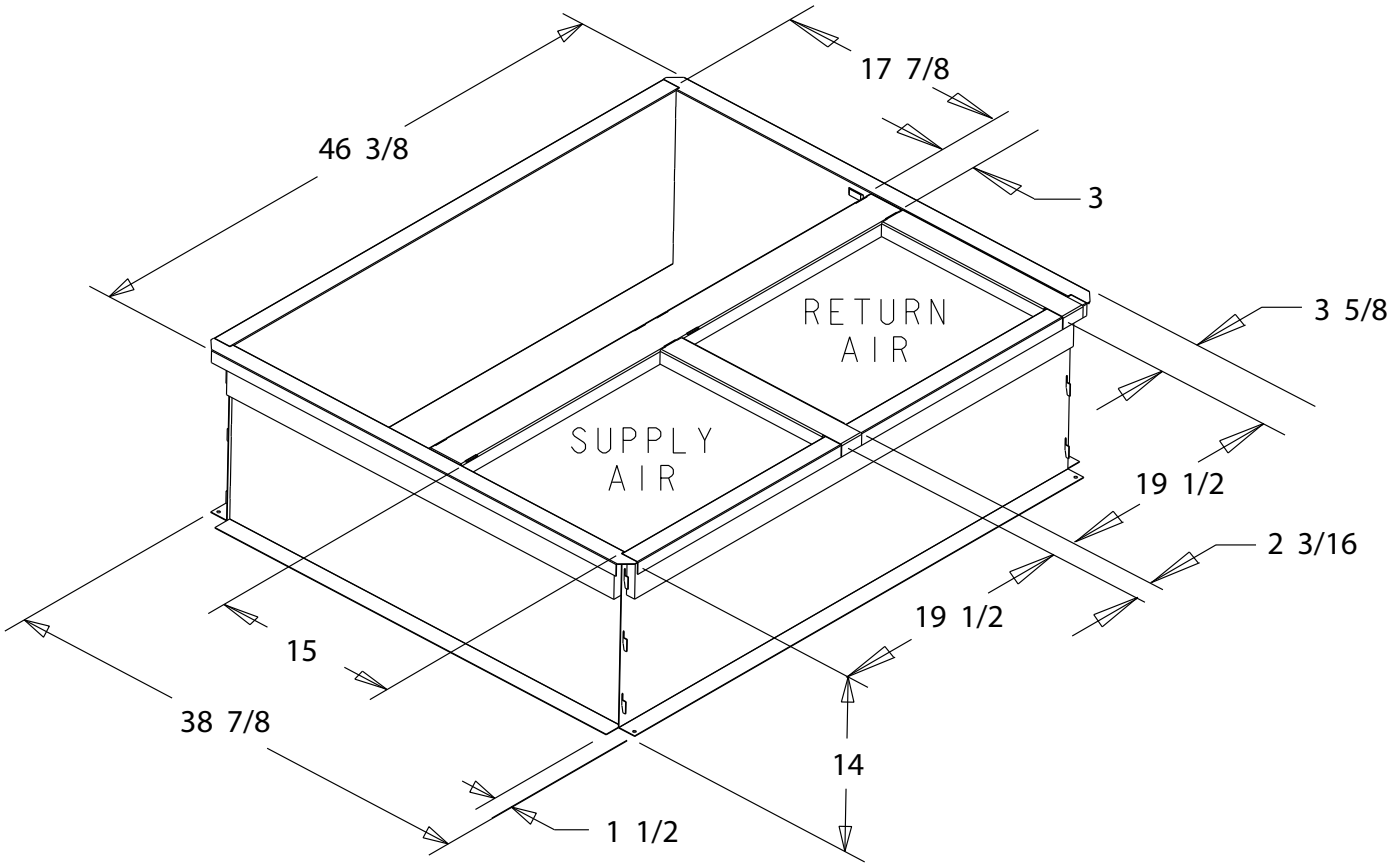

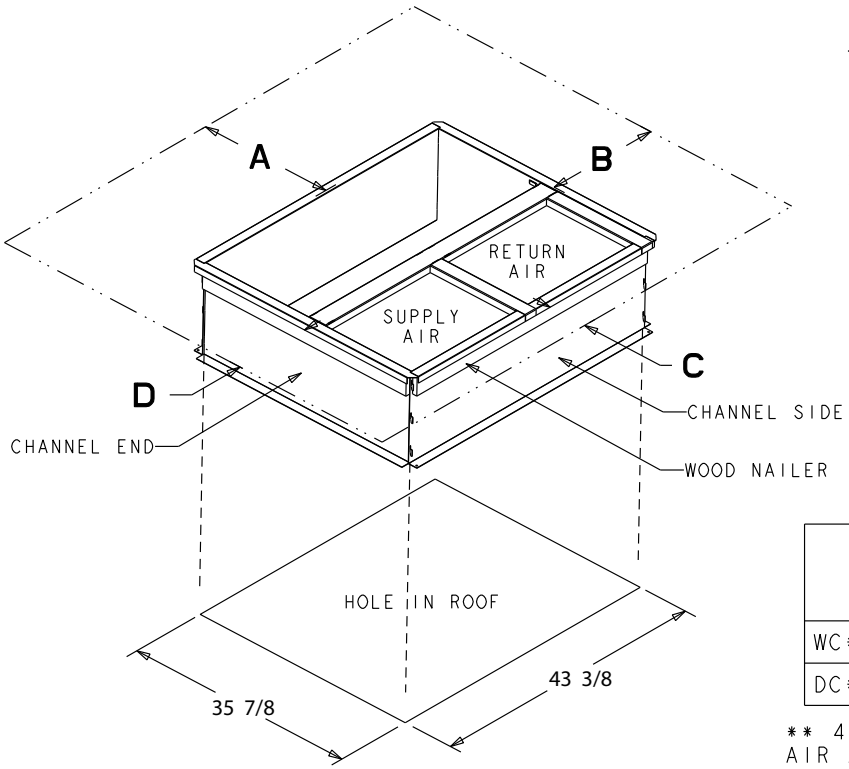

The drawings on this page are prepared by the manufacturer in order to provide detail regarding job layout only. These drawings are not intended to be used as a basis to construct, build or modify the items depicted in the drawings. The manufacturer is not responsible for the unauthorized use of these drawings and expressly disclaims any liability for damages resulting from such unauthorized use.

	SERVICE CLEARANCE DIMENSIONS			
	A	B	C	D
WC*/TC*	42.00	36.00	12.00**	24.00
DC*/YC*	42.00	36.00	12.00**	36.00

** 42.00 WITH ECONOMIZER WITH 25% FRESH AIR ACCESSORY

Optional Equipment

BAYCURB051A Full Perimeter Roof Mounting Curb for4YCZ6048-060A

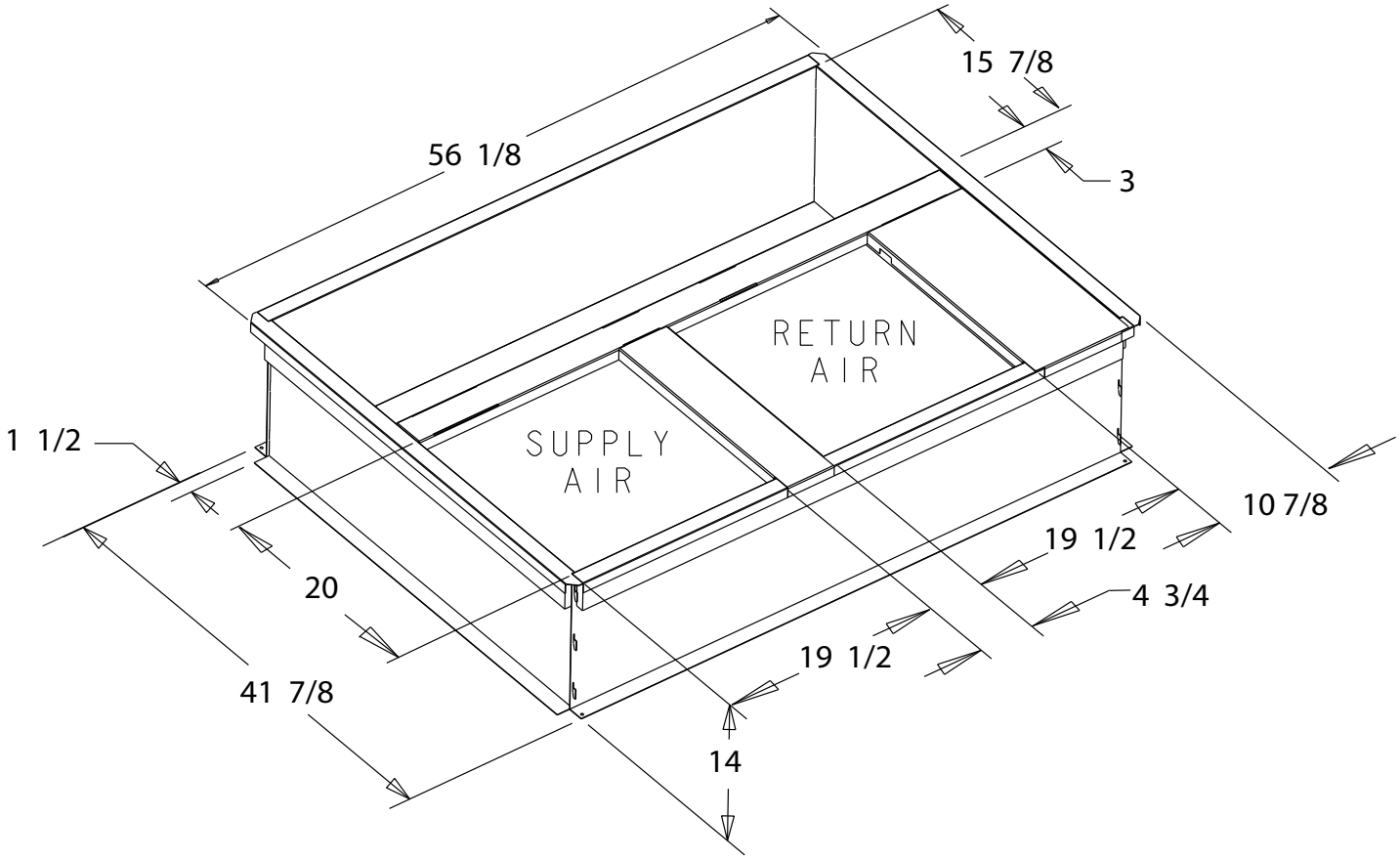

The drawings on this page are prepared by the manufacturer in order to provide detail regarding job layout only. These drawings are not intended to be used as a basis to construct, build or modify the items depicted in the drawings. The manufacturer is not responsible for the unauthorized use of these drawings and expressly disclaims any liability for damages resulting from such unauthorized use.

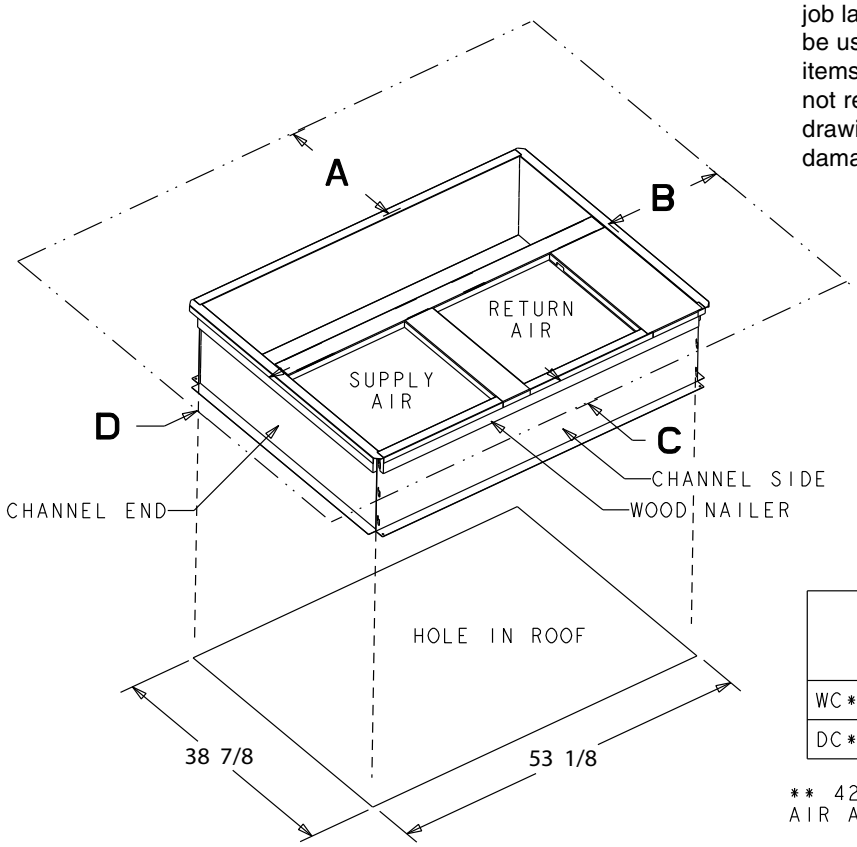

	SERVICE CLEARANCE DIMENSIONS			
	A	B	C	D
WC*/TC*	42.00	36.00	12.00**	24.00
DC*/YC*	42.00	36.00	12.00**	36.00

** 42.00 WITH ECONOMIZER WITH 25% FRESH AIR ACCESSORY

Optional Equipment

BAYFLTR101, 201B, 1" - 2" Filter Rack
(Mounts in Filter/Coil Section)

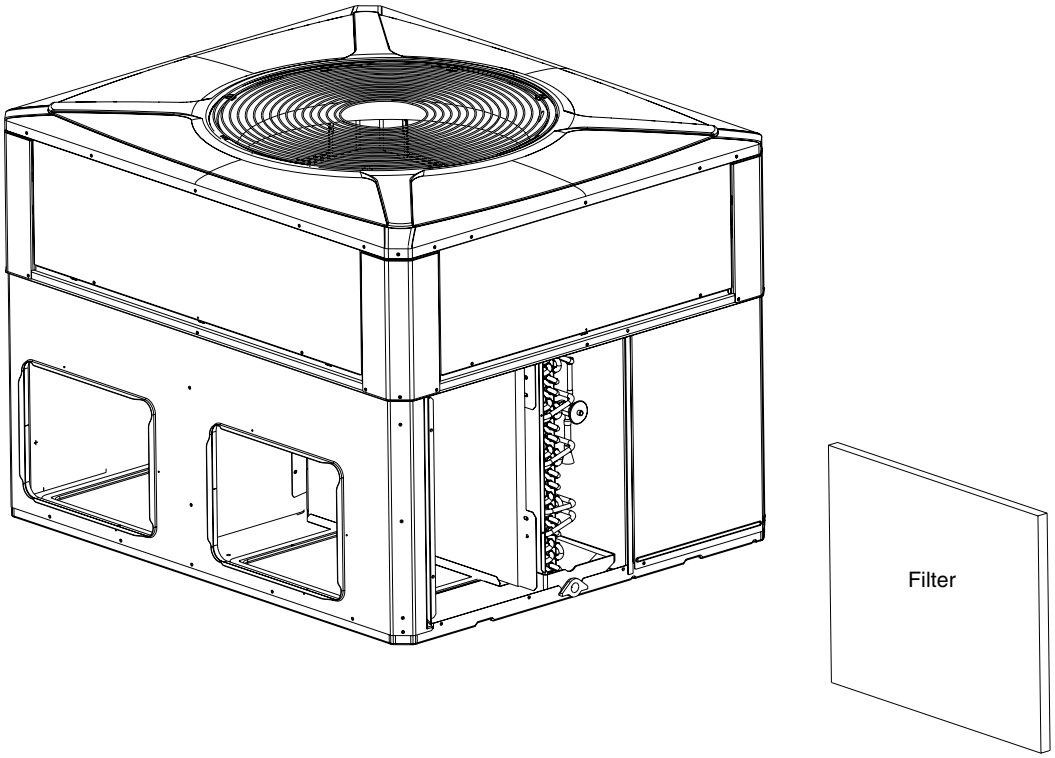

BAYACCDOR1A & BAYACCDOR2A Hinged Filter Access Door
Replaces Filter/Coil Access Panel

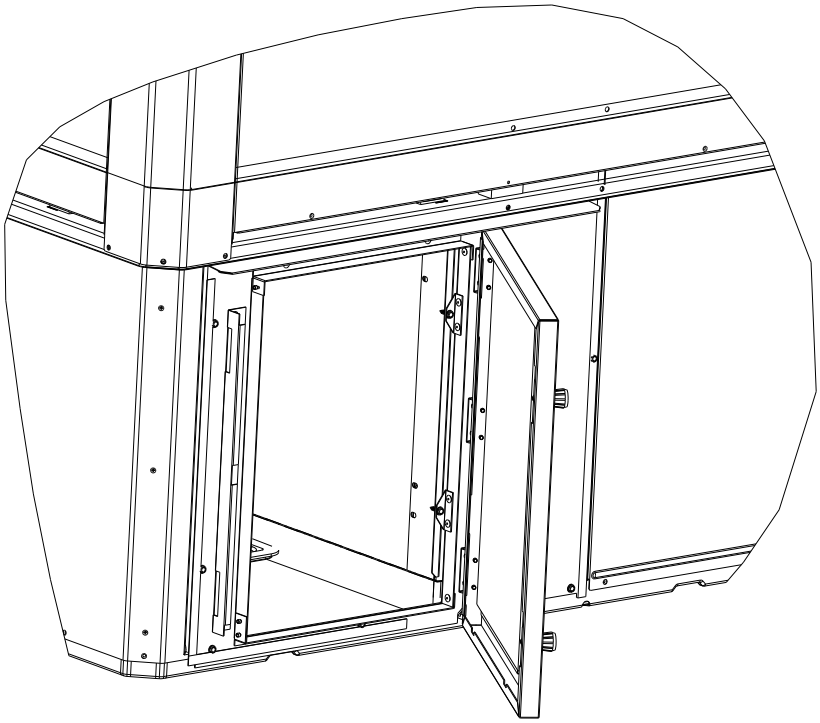

The drawings on this page are prepared by the manufacturer in order to provide detail regarding job layout only. These drawings are not intended to be used as a basis to construct, build or modify the items depicted in the drawings. The manufacturer is not responsible for the unauthorized use of these drawings and expressly disclaims any liability for damages resulting from such unauthorized use.

Optional Equipment

BAYECON103,104A Down Discharge Economizer and Rain Hood (Mounts Over Horizontal Return Air Opening)

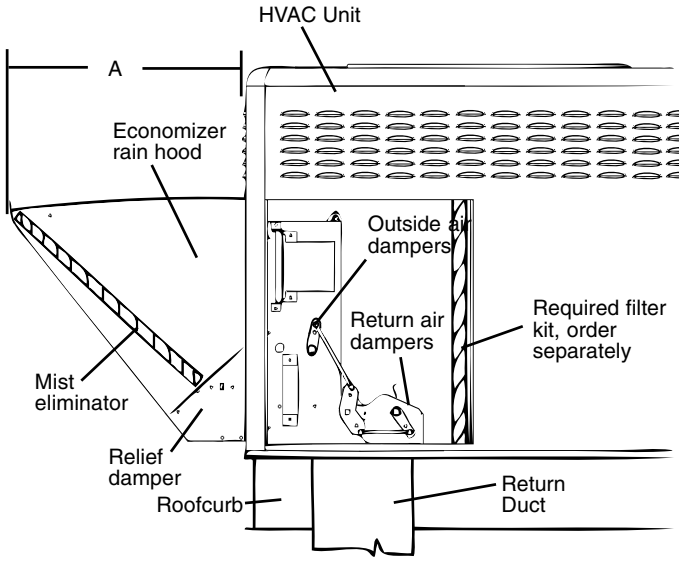

Economizer	Models	A
BAYECON103A	4WCZ6036A 4DCZ6036A 4YCZ6036A	20 1/8"
BAYECON104A	4WCZ6048-060A 4DCZ6048-060A 4YCZ6048-060A	24 3/8"

BAYECON203,204A Horizontal Economizer and Rain Hood

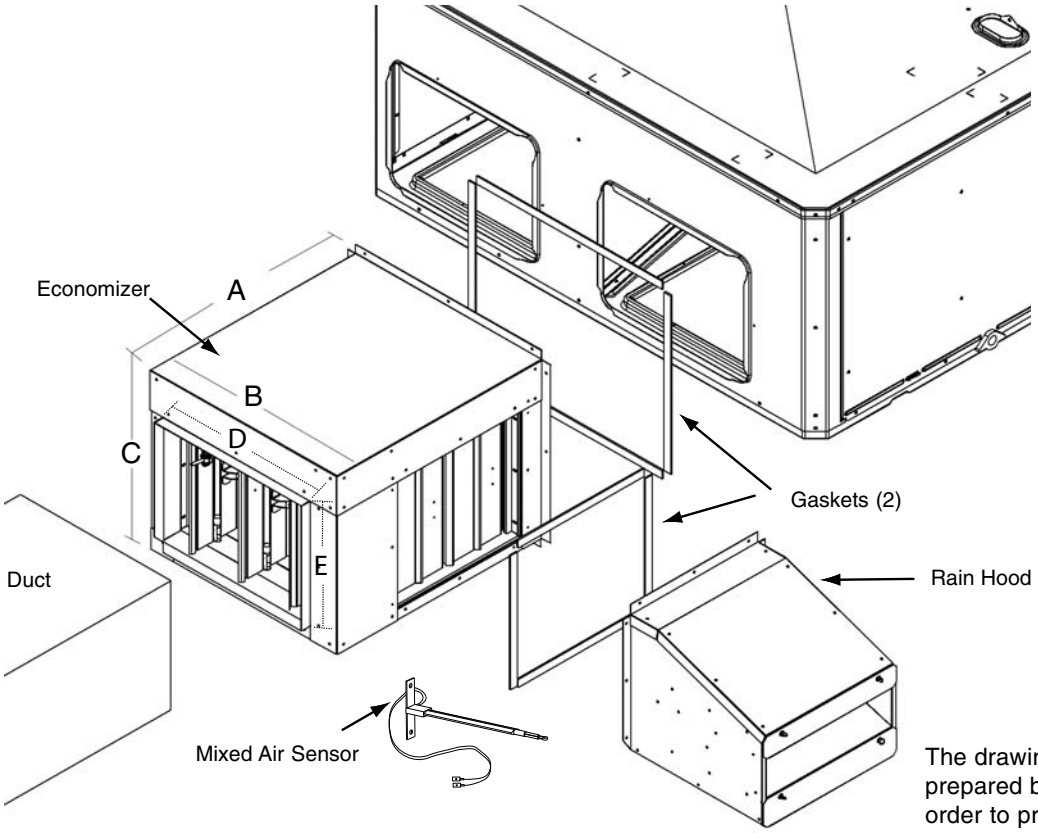

Economizer	A	B	C	D	E
BAYECON203AA	22"	20"	16 7/8"	15 11/16	11 11/16
BAYECON204AA	24"	22 21/32"	19"	17 11/16	14 11/16

The drawings on this page are prepared by the manufacturer in order to provide detail regarding job layout only. These drawings are not intended to be used as a basis to construct, build or modify the items depicted in the drawings. The manufacturer is not responsible for the unauthorized use of these drawings and expressly disclaims any liability for damages resulting from such unauthorized use.

Optional Equipment

BAYOSAH001,002A, 25% Outside Air Damper (Replaces Filter/Coil Access Panel)

The drawings on this page are prepared by the manufacturer in order to provide detail regarding job layout only. These drawings are not intended to be used as a basis to construct, build or modify the items depicted in the drawings. The manufacturer is not responsible for the unauthorized use of these drawings and expressly disclaims any liability for damages resulting from such unauthorized use.

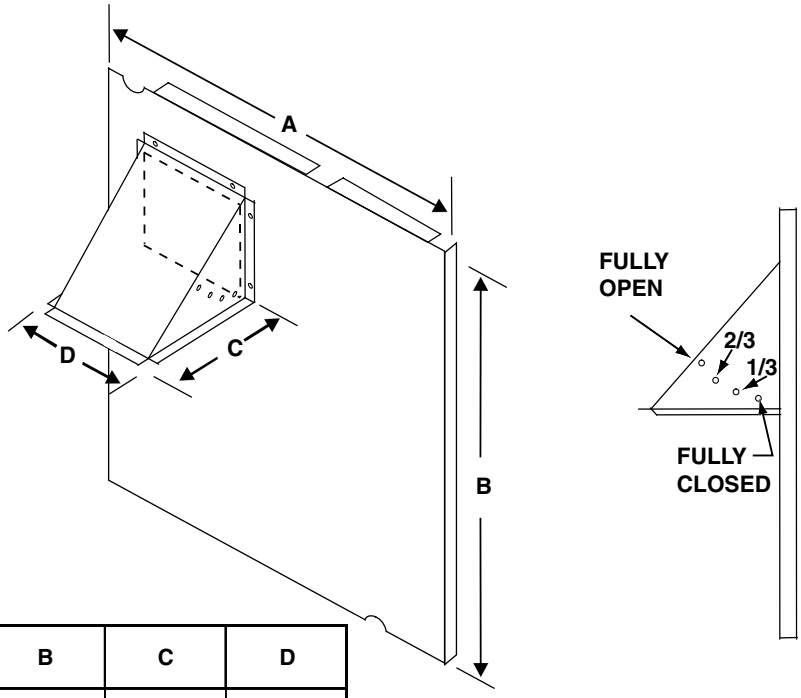

Manual Fresh Air Model	Unit Application Models	A	B	C	D
BAYOSAH001	2/4YC,WC3018-036A 4TC*3018-036A 4W/T/Y/DCY4024-060A	22 7/16"	20 11/16"	12 3/8"	9 3/16"
BAYOSAH002	2/4YC,WC3042-060A 4TC*3042-060A 4W/T/Y/DCY4024-060	25 3/16"	20 11/16"	12 3/8"	9 3/16"

BAYDMPR101,102A, 25% Motorized Outside Air Damper (Mounts Over Horizontal Return AIr Opening)

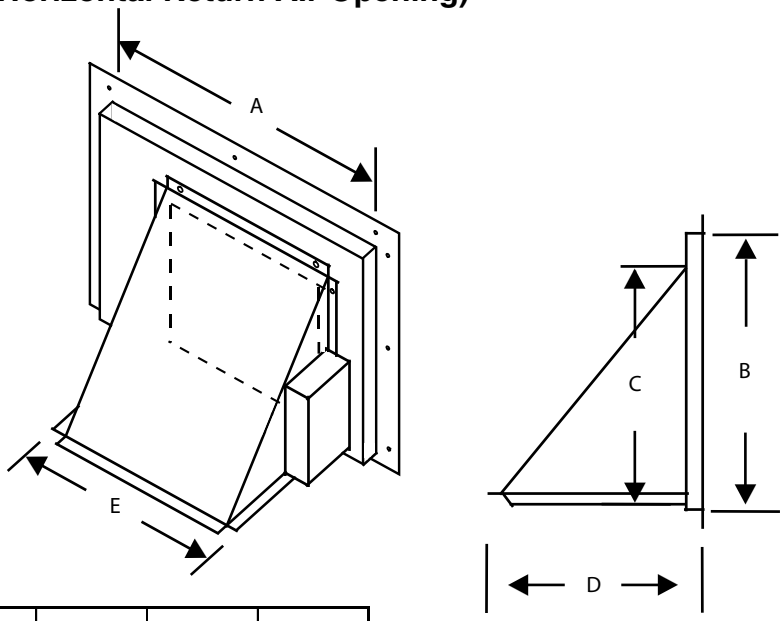

	Unit Application Models	A	B	C	D	E
BAYDMPR101A	2/4YC,WC3018-036A 4TC3018-036A 4W/T/Y/DCY4024-0600	15 13/16"	11 13/16"	10 1/4"	11 1/2"	12 1/4"
BAYDMPR102A	2/4YC,WC3042-060A 4TC3042-060A 4W/T/Y/DCY4024-060	18 3/16"	15 1/8"	10 1/4"	11 1/2"	12 1/4"

Dimensional Data

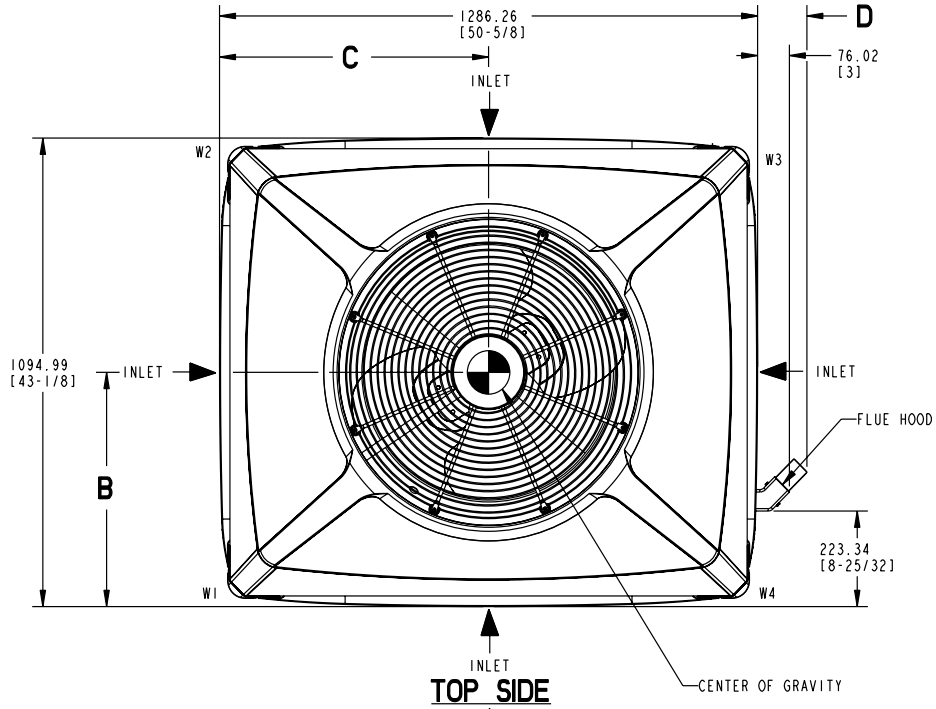

TOP SIDE

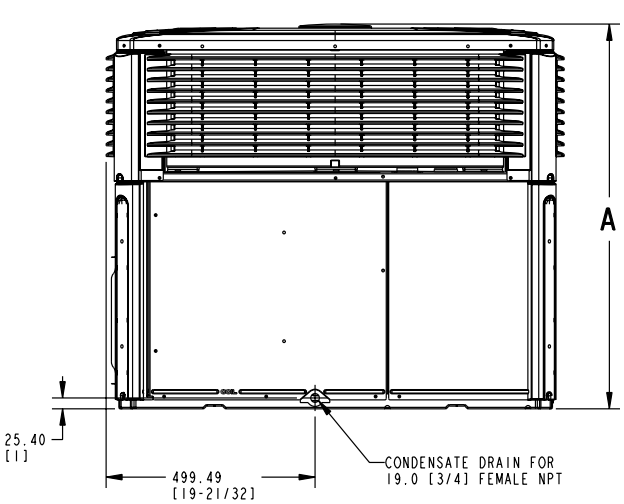

LEFT SIDE

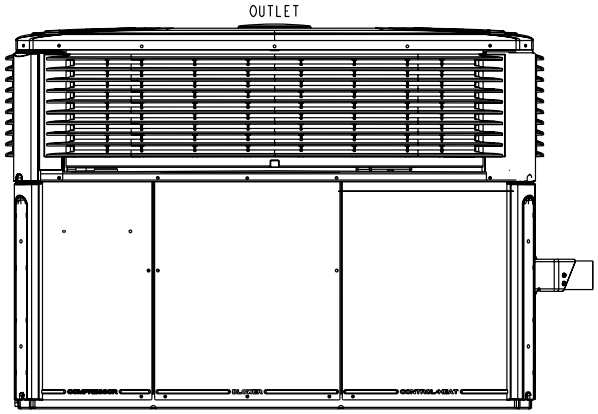

FRONT SIDE

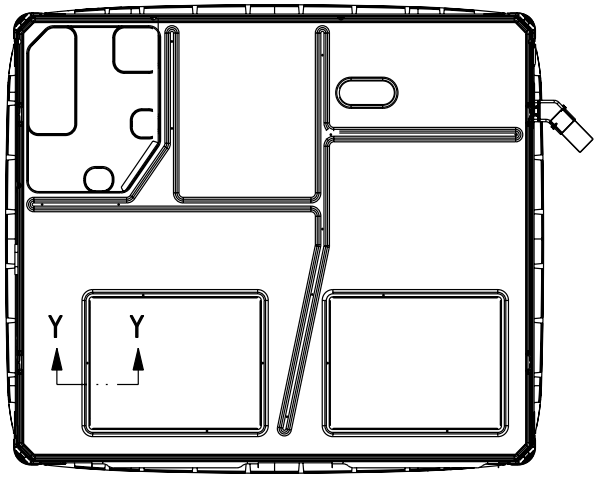

BOTTOM SIDE

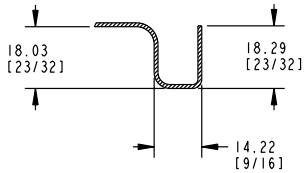

SECTION Y-Y
TYPICAL (8) SIDES OF DOWNFLOW DUCT OPENINGS

4YCZ6036A (1 of 3)

Dimensional Data

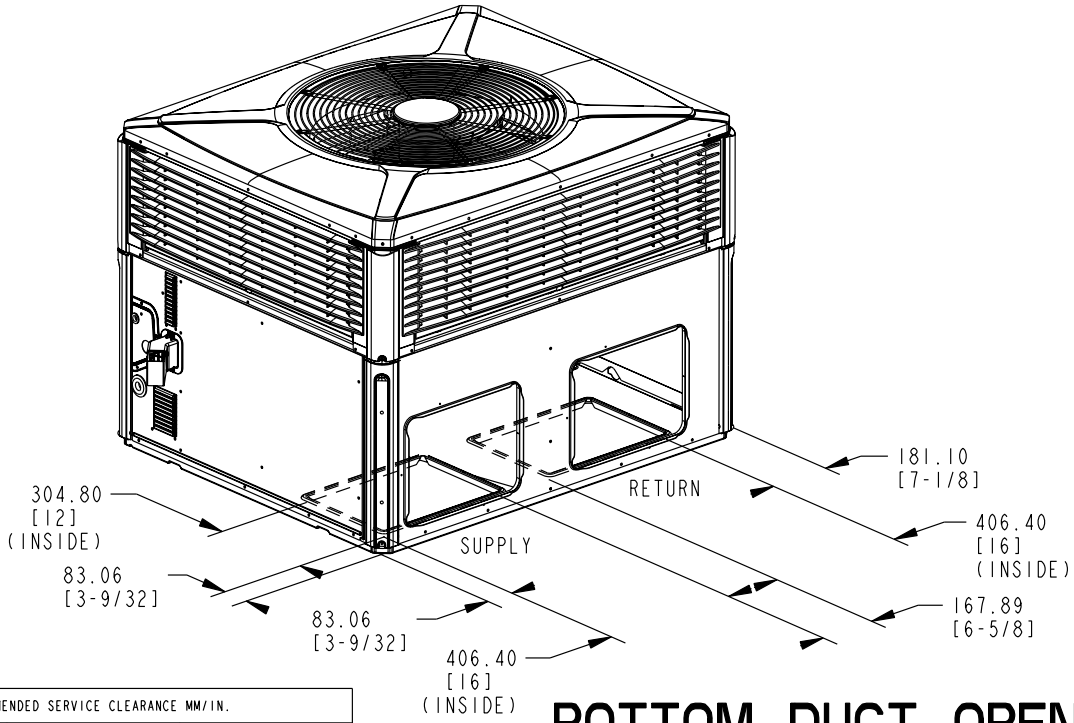

BOTTOM DUCT OPENINGS

RECOMMENDED SERVICE CLEARANCE MM/IN.		
		WITH ECONOMIZER
BACK SIDE	304.8 [12]	762.0 [30]
LEFT SIDE	762.0 [30]	914.4 [36]
RIGHT SIDE	914.4 [36]	-
FRONT SIDE	1066.8 [42]	-

CLEARANCE TO COMBUSTIBLE MATERIAL MM/IN.	
BOTTOM	0
BACK SIDE	25.4 [1]
LEFT SIDE	152.4 [6]
RIGHT SIDE	304.8 [12]
FRONT SIDE	304.8 [12]
TOP	914.4 [36]

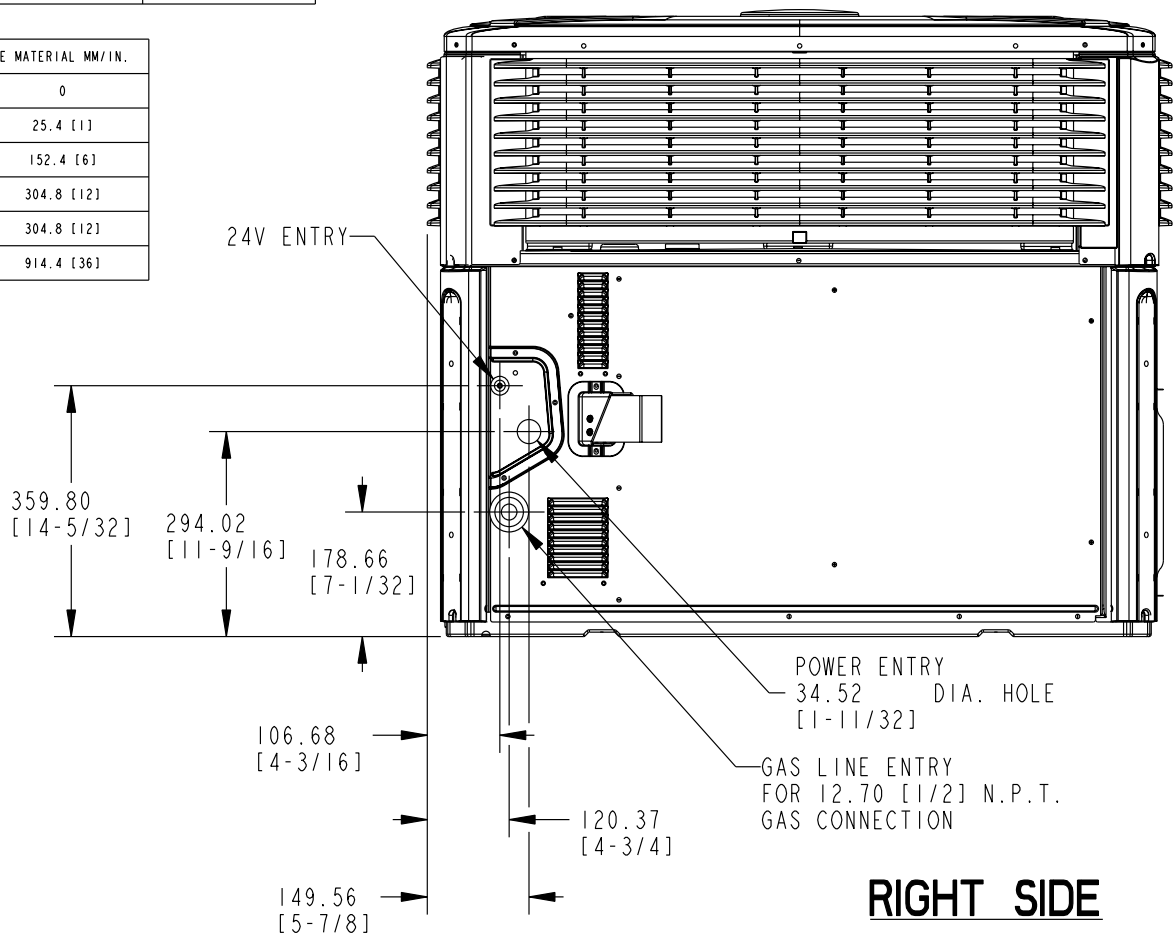

RIGHT SIDE

4YCZ6036A (2 of 3)

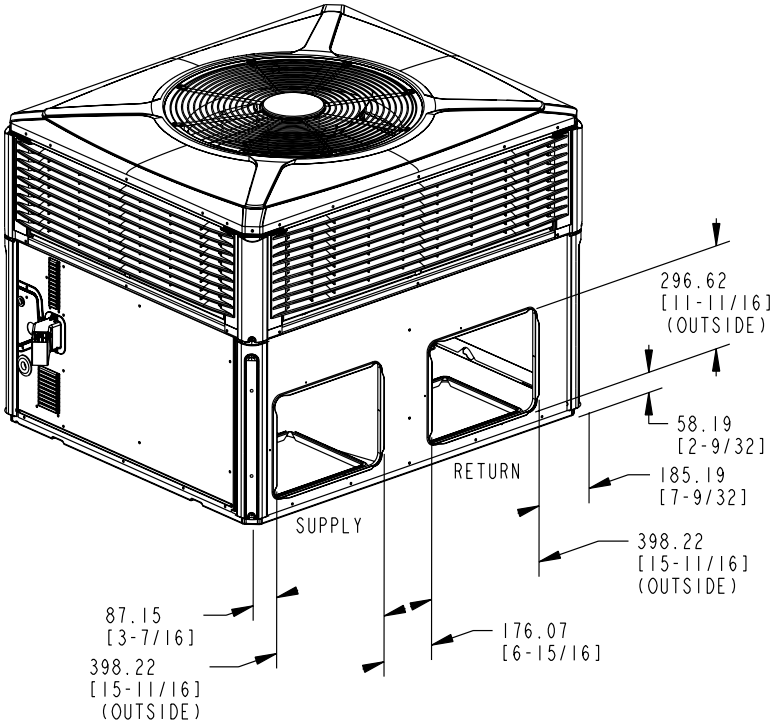

BACK DUCT OPENINGS

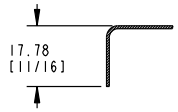

SECTION X-X
TYPICAL (8) SIDES OF SIDEFLOW DUCT OPENINGS

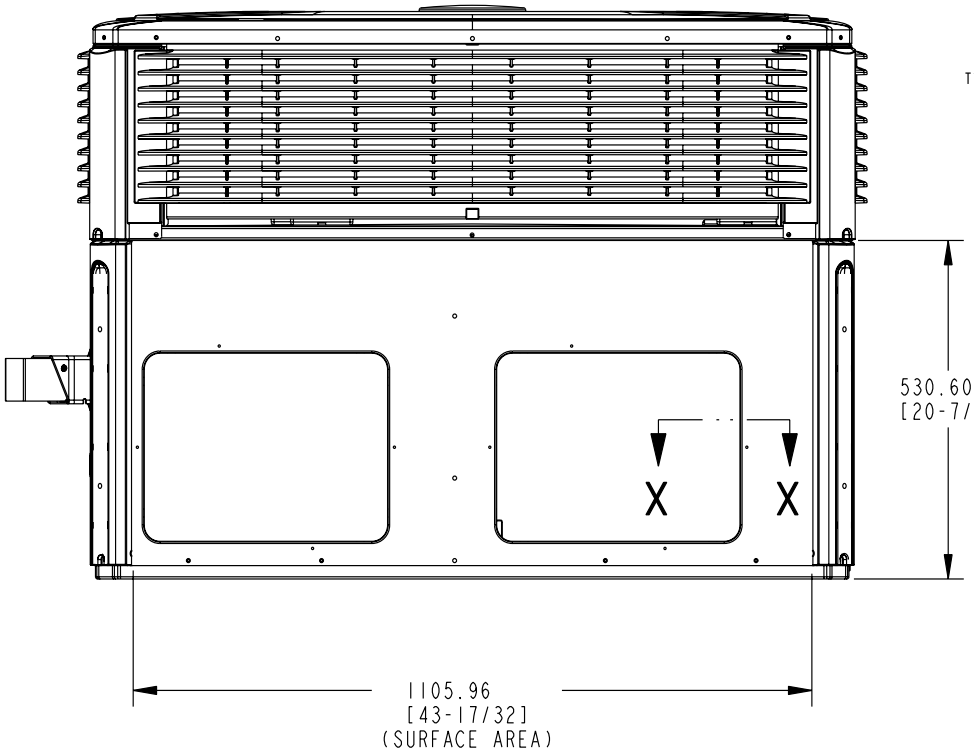

BACK SIDE

MODEL	HEIGHT MM/IN.	FLUE HOOD W/BRKT MM/IN.	APPROX. CORNER WEIGHT - KG/LBS				SHIPPING WEIGHT KG/LBS	TOTAL UNIT WEIGHT KG/LBS	CENTER OF GRAVITY MM/IN.	
	A	D	W1	W2	W3	W4			B	C
4YCY4024 (064)	903.29 [35-9/16]	-	59.0 [130]	37.2 [82]	31.3 [69]	48.5 [107]	218.4 (481)	174.8 [385]	401.3 [15.8]	546.1 [21.5]
4YCY4036/4YCZ6036 (075)	949.99 [37-3/8]	117.86 [4-5/8]	60.3 [133]	36.3 [80]	30.4 [67]	50.3 [111]	221.6 (488)	178.0 [392]	388.6 [15.3]	558.8 [22.0]
4YCY4036/4YCZ6036 (096)			61.2 [135]	36.7 [81]	30.8 [68]	51.3 [113]	223.8 (493)	180.1 [397]	388.6 [15.3]	558.8 [22.0]
4DCY4024 (064)	903.29 [35-9/16]	-	60.8 [134]	38.1 [84]	31.3 [69]	48.5 [107]	218.4 (481)	174.8 [385]	398.8 [15.7]	546.1 [21.5]
4DCY4036/4DCZ6036 (075)	949.99 [37-3/8]	117.86 [4-5/8]	62.1 [137]	37.2 [82]	30.4 [67]	50.3 [111]	221.6 (488)	178.0 [392]	386.1 [15.2]	558.8 [22.0]

4YCZ6036A (3 of 3)

Dimensional Data

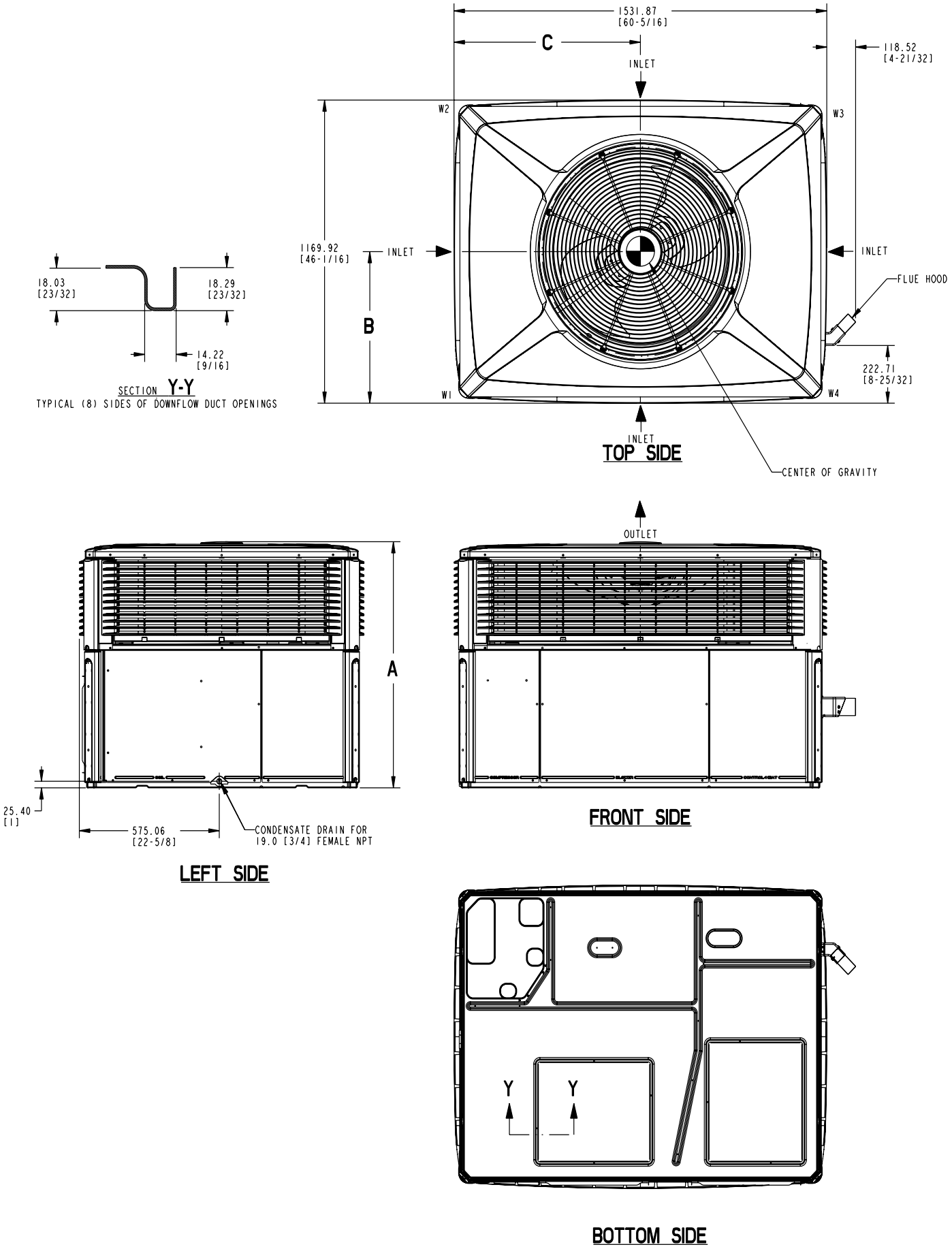

4YCZ6048A through 4YCZ6060A (1 of 3)

Dimensional Data

RECOMMENDED SERVICE CLEARANCE MM/IN.		
		WITH O.A. DAMPER/ECON.
BACK SIDE	304.8 [12]	762.0 [30]
LEFT SIDE	914.4 [36]	1066.8 [42]
RIGHT SIDE	914.4 [36]	-
FRONT SIDE	1066.8 [42]	-

CLEARANCE TO COMBUSTIBLE MATERIAL MM/IN.	
BOTTOM	0
BACK SIDE	25.4 [1]
LEFT SIDE	152.4 [6]
RIGHT SIDE	304.8 [12]
FRONT SIDE	304.8 [12]
TOP	914.4 [36]

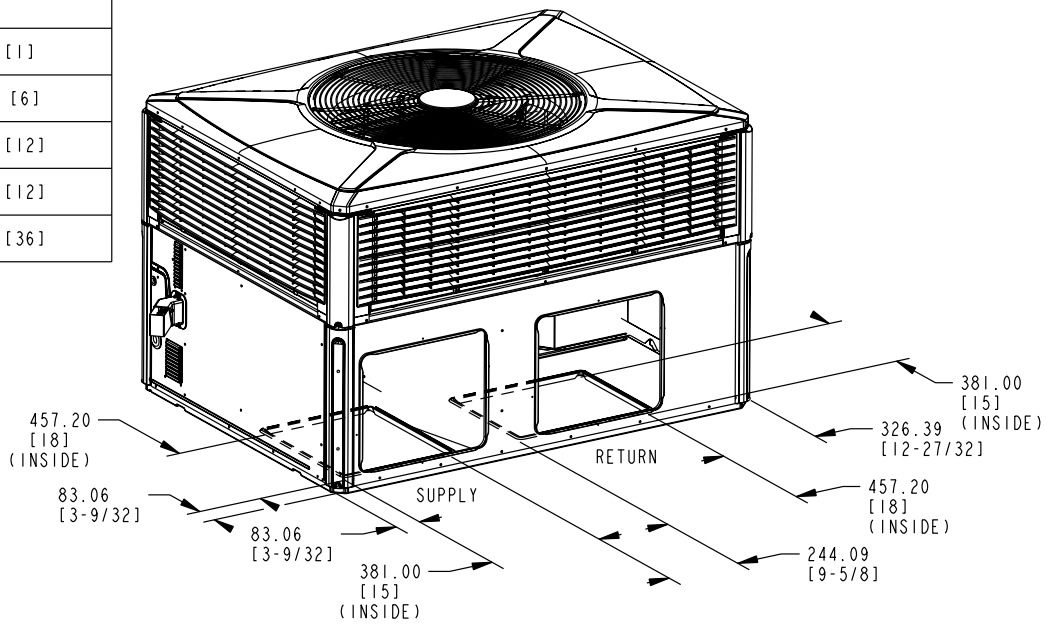

BOTTOM DUCT OPENINGS

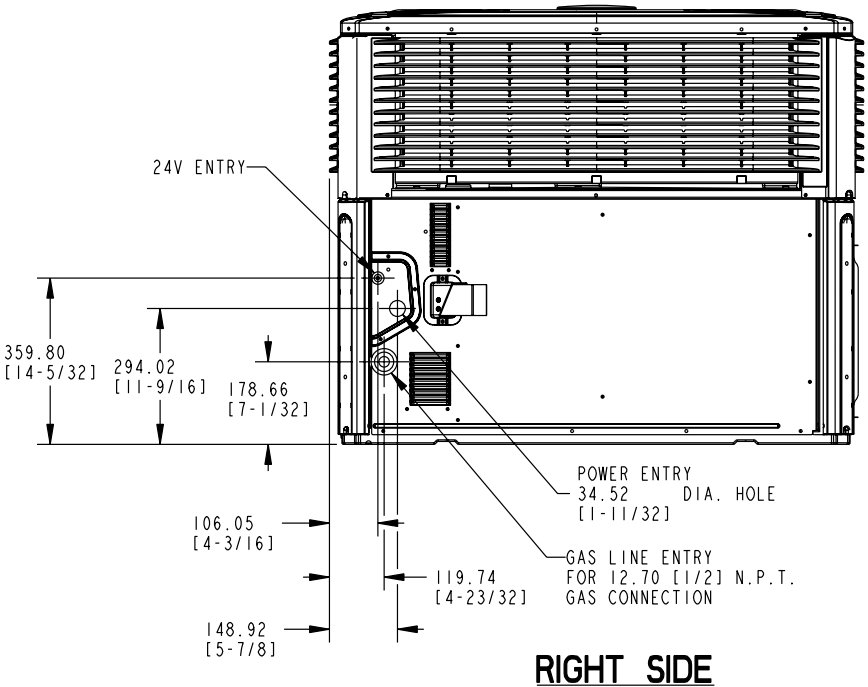

RIGHT SIDE

4YCZ6048A through 4YCZ6060A (2 of 3)

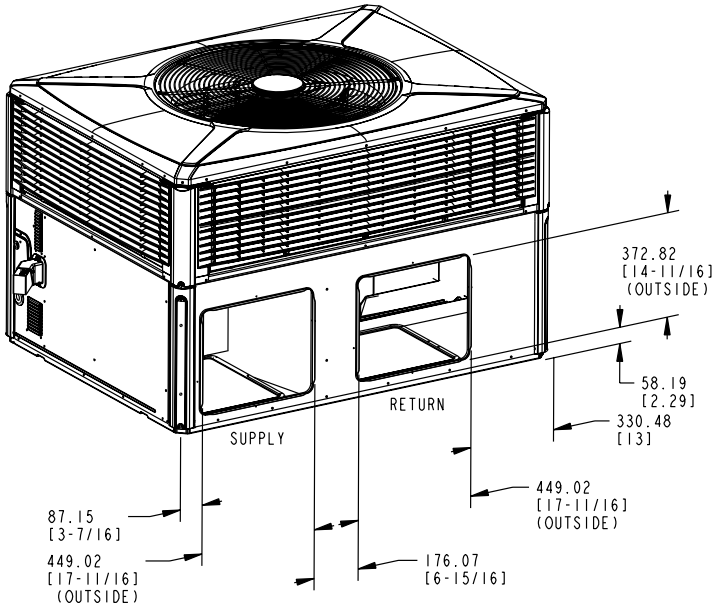

BACK DUCT OPENINGS

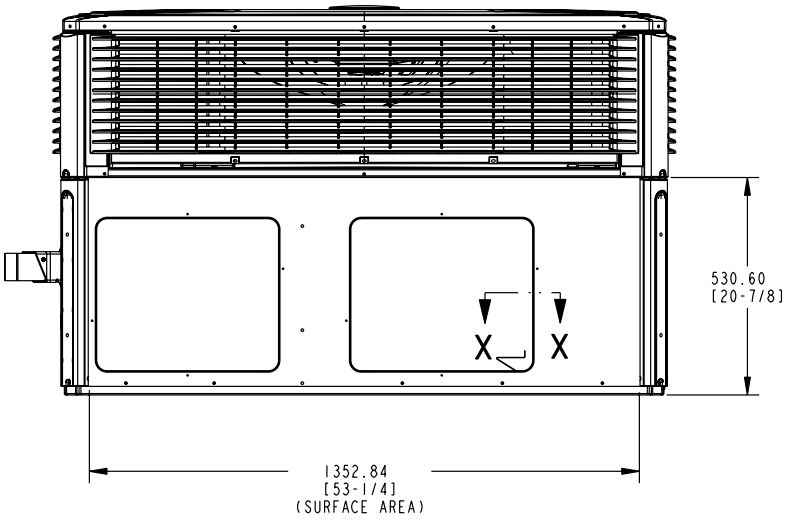

BACK SIDE

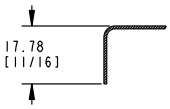

SECTION X-X
TYPICAL (8) SIDES OF SIDEFLOW DUCT OPENINGS

MODEL	HEIGHT MM/IN.	APPROX. CORNER WEIGHT - KG/LBS				SHIPPING WEIGHT KG/LBS	TOTAL UNIT WEIGHT KG/LBS	CENTER OF GRAVITY MM/IN.	
	A	W1	W2	W3	W4			B	C
4YCY4048 (096)	949.33 [37-3/8]	75.3 [166]	50.3 [111]	45.4 [100]	67.6 [149]	296.5 [653]	238.1 [525]	444.5 [17.5]	698.5 [27.5]
4YCY4048 (120)		75.7 [167]	50.8 [112]	45.8 [101]	68.5 [151]	299.2 [659]	240.9 [531]	444.5 [17.5]	698.5 [27.5]
4YCY4060A1/A3 (120)	1050.93 [41-3/8]	82.1 [181]	46.3 [102]	43.1 [95]	76.7 [169]	306.9 [676]	248.6 [548]	401.3 [15.8]	711.2 [28.0]
4DCY4048 (096)	949.33 [37-3/8]	77.1 [170]	51.3 [113]	45.4 [100]	67.6 [149]	296.5 [653]	238.4 [525]	442.0 [17.4]	698.5 [27.5]
4DCY4060 (120)	1050.93 [41-3/8]	83.9 [185]	47.2 [104]	43.1 [95]	76.7 [169]	306.9 [676]	248.8 [548]	398.8 [15.7]	711.2 [28.0]
4YCZ6048A1/A3/A4 (096)	1050.93 [41-3/8]	75.7 [167]	50.8 [112]	45.8 [101]	68.5 [151]	299.2 [659]	240.9 [531]	444.5 [17.5]	698.5 [27.5]
4YCZ6048A1/A3/A4 (120)		81.6 [180]	46.3 [102]	42.2 [93]	73.5 [162]	301.6 [665]	243.6 [537]	419.1 [16.5]	706.1 [27.8]
4YCZ6060A1/A3/A4 (120)	1050.93 [41-3/8]	82.1 [181]	46.3 [102]	43.1 [95]	76.7 [169]	306.9 [676]	248.6 [548]	401.3 [15.8]	711.2 [28.0]
4DCZ6048 (096)	1050.93 [41-3/8]	81.6 [180]	46.3 [102]	42.2 [93]	73.5 [162]	301.6 [665]	243.6 [537]	419.1 [16.5]	706.1 [27.8]
4DCZ6060 (120)	1050.93 [41-3/8]	83.9 [185]	47.2 [104]	43.1 [95]	75.7 [169]	306.9 [676]	248.8 [548]	398.8 [15.7]	711.2 [28.0]

4YCZ6048A through 4YCZ6060A (3 of 3)

Mechanical Specifications

General

All units shall be factory assembled, piped, internally wired and fully charged with refrigerant. All units shall be designed to operate at outdoor ambient temperatures as high as 115°F. Cooling capacities shall be rated in accordance with A.R.I. standards. The 4YCZ6 heating/cooling unit design is UL listed, specifically for outdoor applications using natural gas or propane. All units shall be designed for outdoor rooftop or ground level installation. Unit casing is constructed of heavy gauge, galvanized steel and painted with a weather-resistant powder paint.

Shipped for horizontal application, convertible to downflow.

Casings

All panels shall be heavy gauge steel, gasketed and insulated. Foil-faced insulation shall be in the heat exchanger section. Foil-faced insulation shall be in the evaporator section. Base pan shall be heavy gauge steel. **WEATHERGUARD™** exterior corrosion resistant screws shall be used for added resistance to rust and corrosion.

Controls

Refrigeration cycle controls shall include condenser fan, evaporator fan and compressor contactors. Compressors shall be equipped with a combination internal winding thermostat/current overload. Internal high pressure relief shall also be provided.

Refrigeration System

Compressors —

The **Climatuff®** two-stage compressor features internal over temperature and pressure protector, total dipped hermetic motor. Other features include: roto lock suction and discharge refrigeration connections, centrifugal oil pump, and low vibration and noise.

Evaporator Coil — Internally enhanced 3/8-inch OD seamless copper tubing mechanically bonded to aluminum fins, factory pressure and leak tested at 250 to 300 psig. All units have TXV to control refrigeration flow.

Condenser Coil —

The **Spine Fin™** condenser coil shall be continuously wrapped, corrosion resistant all aluminum with minimum brazed joints. This coil is 3/8 inch OD seamless aluminum tubing glued to a continuous aluminum fin. Coils are lab tested to withstand 2,000 pounds of pressure per square inch. The outdoor coil provides low airflow resistance and efficient heat transfer. The coil is protected on all four sides by louvered panels.

Indoor Air Fan — Direct-drive, forward-curved, centrifugal wheel in a Composite **Vortica®** Blower housing. Motor shall have thermal overload protection. Permanently lubricated motor bearings. Motor/blower assembly isolated from unit with rubber mounts.

Condenser Fan — Direct-drive, draw through propeller type. Weather-proofed permanent split capacitor fan motor shall have built-in thermal overload and permanently lubricated motor bearings.

Low Ambient — Standard refrigerant system operation down to 55°F. Low ambient accessory required for operation to 0°F ambient condition.

Gas-Fired Heating System — Models shall provide completely assembled, wired and piped gas fired heating systems within unit. Design certified by UL, specifically for outdoor application. Threaded gas connection on the unit.

Electronic Ignition System — Main burner is lit each time thermostat calls for gas heat. Flame sensor proves flame and keeps the main burners on. Should a loss of flame occur, the main valve closes and the spark recurs within 0.8 second. When thermostat is satisfied, main burner is extinguished.

Forced Combustion Blower — Insures flame stability under varying wind conditions. Gives higher combustion efficiency and location flexibility.

Heat Exchanger — stainless steel tubes. Free floating design.

Burners — stainless steel. Multi-port inshot.

Accessories
(U.S. Domestic Models)

Roof Curb — The roof curb shall be designed to mate with the unit and provide support and complete weather-tight installation when properly installed. Curb shall ship knocked down for field assembly, and include wood nailer strips.

Modulating Economizer — This accessory shall be field installed and be composed of the following items: 0-100% fresh air damper, damper drive motor fixed dry bulb enthalpy control, and low voltage polarized plug for electrical connections. Solid state enthalpy or differential enthalpy control is optional. Economizer operations shall be controlled by the preset position of the enthalpy control. A barometic relief damper shall be standard with the economizer and provide a pressure operated damper that shall be gravity closing and prohibit entrance of outside air on equipment “off” cycle.

Manual Fresh Air Hood

Manual outside air provides a fixed outside air quantity from 0 to 25 percent. Includes hood and birdscreen.

Low Ambient Control

Control allows cycling of compressor under low ambient cooling conditions. Required for cooling operation to 0°F.

Propane Gas

Conversion Kit — For conversion from natural gas to LP gas.

Trane
6200 Troup Highway
Tyler, TX 75707-9010